http://ingesolucionarios.blogspot.com

# SOLUTIONS MANUAL

**For**

# MECHANICS OF FLUIDS

**FOURTH EDITION**

by

I. H. Shames

The George Washington University

http://ingesolucionarios.blogspot.com Edu_Zegarr_ch

# CHAPTER 1

http://ingesolucionarios.blogspot.com

1.1 Resnick and Halliday in "Physics for Students in Science and Engineering" define a fluid as "a substance that can **flow**". This is very close to our definition but would include materials undergoing creep and other viscoelastic behavior. However, as a first introduction to the subject of mechanics this definition is adequate.

Pauling in "General Chemistry" does not define fluid but is concerned about gases and liquids. These definitions are concerned with molecular behavior of these two phases.

1.2 The diagram referred to in this problem appears as

In strength of materials, we used the concept of an elastic, perfectly plastic stress-strain diagram, as shown. Does such a material satisfy the definition of a fluid? Explain.

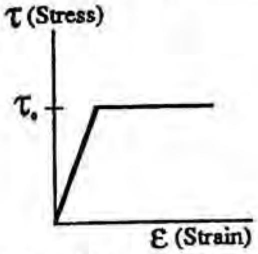


This material does not satisfy our definition because a certain stress $\tau_o$ must be reached before there is the possibility of plastic flow. A fluid flows for any shear stress, however small.

1.3

What is the dimensional representation of:
(*a*) Power
(*b*) Modulus of elasticity
(*c*) Specific weight
(*d*) Angular velocity
(*e*) Energy
(*f*) Moment of a force
(*g*) Poisson's ratio
(*h*) Strain

$\left(\frac{FL}{t}\right)$ (a) $(FL)$ (e)

$\left(\frac{F}{L^2}\right)$ (b) $(FL)$ (f)

$\left(\frac{F}{L^3}\right)$ (c) $(1)$ (g)

$\left(\frac{1}{t}\right)$ (d) $(1)$ (h)

1.4

What is the relation between a scale unit of acceleration in USCS (pound-mass-foot-second) and SI (kilogram-meter-second)?

$$(a) = \left(\frac{L}{t^2}\right) = \frac{ft}{sec^2} \equiv \frac{ft\left(\frac{.305\,meter}{1\,ft}\right)}{sec^2}$$

$$= .305\ \frac{meter}{sec^2} \qquad \therefore\ 1\ \frac{ft}{sec^2} = .305\ \frac{meter}{sec^2}$$

**1.5**

How many scale units of power in SI using newtons, meters, and seconds are there to a scale unit in USCS using pounds of force, feet, and seconds?

$$Power = \frac{FL}{t} = \frac{lbf\cdot ft}{s}$$

$$= \frac{lbf\left(\frac{4.45N}{lbf}\right)ft\left(\frac{.305m}{1\,ft}\right)}{s}$$

$$\therefore\ 1\ \frac{ft\cdot lbf}{s} = 1.373\ \frac{N\cdot m}{s}$$

**1.6**

Is the following equation a dimensionally homogeneous equation:

$$a = \frac{2d}{t^2} - \frac{2V_0}{t}$$

where $a$ = acceleration
$d$ = distance
$V_0$ = velocity
$t$ = time

$$a = \frac{2d}{t^2} - 2\frac{V_o}{t}$$

$$\left(\frac{L}{t^2}\right) = \left(\frac{L}{t^2}\right) - \left(\frac{\frac{L}{t}}{t}\right)$$

$\therefore$ Dimensionally homogeneous

**1.7**

The following equation is dimensionally homogeneous:

$$F = \frac{4Ey}{(1-\nu^2)(Rd^2)}\left[(h-y)\left(h-\frac{y}{2}\right)A - A^3\right]$$

where $E$ = Young's modulus
$\nu$ = Poisson's ratio
$d, y, h$ = distances
$R$ = ratio of distances
$F$ = force

What are the dimensions of $A$?

$$(F) = \left(\frac{\frac{F}{L^2}L}{L^2}\right)[(L)(L)(A)-(A)^3]$$

$$(A) = (L)$$

**1.8**

The shape of a hanging drop of liquid is expressible by the following formulation developed from photographic studies of the drop:

$$T = \frac{(\gamma-\gamma_0)(d_e)^2}{H}$$

where $\gamma$ = specific weight of liquid drop
$\gamma_0$ = specific weight of vapor around it
$d_e$ = diameter of drop at its equator
$T$ = surface tension, i.e., force per unit length
$H$ = a function determined by experiment

For the equation above to be dimensionally homogeneous, what dimensions must $H$ possess?

$$\left(\frac{F}{L}\right) = \frac{\left(\frac{F}{L^3}\right)(L^2)}{(H)}$$

$(H) = (1)$ *H is dimensionless*

**1.9**

In the study of elastic solids we must solve the following partial differential equation for the case of a plane where body forces are conservative:

$$\frac{\partial^4\phi}{\partial x^4} + 2\frac{\partial^4\phi}{\partial x^2\partial y^2} + \frac{\partial^4\phi}{\partial y^4} = -(1-\nu)\left(\frac{\partial^2 V}{\partial x^2} + \frac{\partial^2 V}{\partial y^2}\right)$$

where $\phi$ = stress function
$\nu$ = Poisson's ratio
$V$ = scalar function whose gradient $[(\partial V/\partial x)\mathbf{i} + (\partial V/\partial y)\mathbf{j}]$ is the body-force distribution where the body force is given per unit volume

What would the dimensions have to be of the stress function?

$$(\nabla V) = \frac{(F)}{L^3}$$

$$\frac{(V)}{(L)} = \frac{(F)}{(L^3)}$$

$$(V) = \frac{(F)}{(L^2)}$$

$$\therefore\ \frac{(\phi)}{(L^4)} = \frac{(F)/(L^2)}{L^2}$$

$$\therefore\ (\phi) = (F)$$

**1.10**

Convert the coefficient of viscosity $\mu$ from units of dynes, seconds, and centimeters (i.e., poises) to units of pound-force, seconds, and feet.

From Newton's viscosity law we have:

$$\mu = \frac{\tau}{\left(\frac{\partial \upsilon}{\partial n}\right)}$$

$$\therefore\ (\mu) = \frac{\frac{F}{L^2}}{\left(\frac{1}{L}\right)\left(\frac{L}{t}\right)} = \left(\frac{Ft}{L^2}\right)$$

$$\therefore\ 1\ poise = \frac{(dyne)(\text{sec})}{(cm)^2} =$$

$$\frac{(dyne)\ \frac{1\ lbf}{4.45\times10^5\ dynes}\ (\text{sec})}{(cm)^2\left(\frac{1\ ft}{30.5\ cm}\right)^2}$$

$$= 2.09\times10^{-3}\ \frac{(lbf)(\text{sec})}{(ft^2)}$$

http://ingesolucionarios.blogspot.com

What are the dimensions of kinematic viscosity? If the viscosity of water at 40°F is 2.11 × 10⁻⁵ lb · s/ft², what is the kinematic viscosity at these conditions? How many stokes of kinematic viscosity does the water have?

**1.11**

a) $$(\nu) = \left(\frac{\mu}{\rho}\right) = \frac{(M)}{(L)(t)}\,\frac{(L^3)}{(M)} = \frac{(L^2)}{(t)}$$

b)

$$\mu = 2.11\times10^{-5}\ \frac{lb\text{-}sec}{ft^2}$$

$$\nu = \frac{2.11\times10^{-5}\dfrac{lb\text{-}sec}{ft^2}}{1.94\ \dfrac{slugs}{ft^3}}$$

$$= \frac{(2.11\times10^{-5})\ \dfrac{lb\text{-}sec}{ft^2}}{1.94\ \dfrac{slugs}{ft^3}\left(\dfrac{lb/ft/sec^2}{1\ slug}\right)}$$

$$= 1.088\times10^{-5}\ \frac{ft^2}{sec}$$

c)

$$1\ stoke = \frac{1\ cm^2}{sec} = \frac{1(.01m)^2}{sec}$$

$$= \frac{\left[.01m\left(\dfrac{3.28\ ft}{1\ m}\right)\right]^2}{sec}$$

$$= .001076\ \frac{ft^2}{sec}$$

∴ For water

$$\nu = .010113\ stokes$$

Water is moving through a pipe. The velocity profile at some section is shown and is given mathematically as

$$V = \frac{\beta}{4\mu}\left(\frac{D^2}{4} - r^2\right)$$

where β = a constant
r = radial distance from centerline
V = velocity at any position r

What is the shear stress at the wall of the pipe from the water? What is the shear stress at a position r = D/4? If the profile above persists a distance L along the pipe, what drag is induced on the pipe by the water in the direction of flow over this distance?

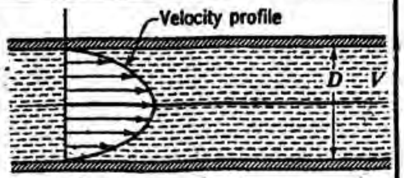


**1.12**

$$V = \frac{\beta}{4\mu}\left(\frac{D^2}{4} - r^2\right)$$

$$\tau_w = \mu\left(\frac{\partial V}{\partial r}\right)_{r=\frac{D}{2}} = \mu\ \frac{\beta}{4\mu}\ (-2r)\Big|_{r=\frac{D}{2}}$$

a) $$\tau_w = -\ \frac{\beta D}{4}$$

b) at $$r = \frac{D}{4},$$

$$\tau = \frac{\beta}{4}\left(-2\ \frac{D}{4}\right) = -\ \frac{\beta D}{8}$$

c)

$$Drag = \tau_w(\pi)(D)(L)$$

$$= \frac{\beta D}{4}\ (\pi)(D)(L)$$

$$= \frac{\beta D^2 \pi L}{4}$$

A large plate moves with speed $V_0$ over a stationary plate on a layer of oil. If the velocity profile is that of a parabola, with the oil at the plates having the same velocity as the plates, what is the shear stress on the moving plate from the oil? If a linear profile is assumed, what is then the shear stress on the upper plate?

**1.13** a) For a **parabolic profile**

$$V^2 = ay$$

When $y = d$, $V = V_o$. Hence:

$$V_o^2 = ad$$

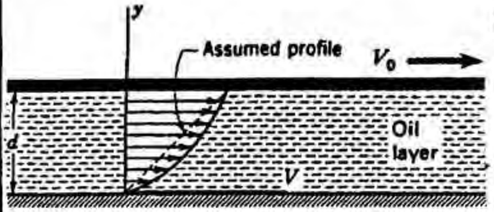


$$a = \frac{V_0^2}{d}$$

Hence:

$$V^2 = V_o^2\left(\frac{y}{d}\right) \qquad \therefore\ V = V_o\sqrt{\frac{y}{d}}$$

$$\tau_w = \mu\left(\frac{\partial V}{\partial y}\right)_{y=d} = \mu\ V_o\ \frac{1}{\sqrt{d}}\ \frac{1}{2}\left(y^{-1/2}\right)_{y=d}$$

$$(\tau_w)_a = \frac{\mu V_o}{2d}$$

b) For a **linear profile:**

$$(\tau_w)_b = \mu\left(\frac{V_o}{d}\right)$$

http://ingesolucionarios.blogspot.com

A block weighing 1 kN and having dimensions 200 mm on an edge is allowed to slide down an incline on a film of oil having a thickness of 0.0050 mm. If we use a linear velocity profile in the oil, what is the terminal speed of the block? The viscosity of the oil is $7 \times 10^{-2}$ P.

1.14

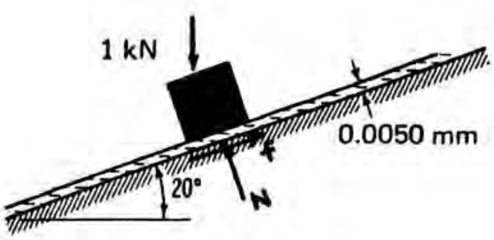


1.14 Note that **1 *poise*** $= \frac{1}{10}$ of a viscosity unit in S.I. units. Hence

$$\mu = 7\times10^{-3} \quad N\cdot s/m^2$$

Using **Newton's** viscosity law:

$$\tau = \mu \frac{\partial V}{\partial n} = 7\times10^{-3} \frac{V_T}{(.005\times10^{-3})} = 1400\,V_T \quad Pa$$

The force $f$ is then

$$f = \tau A = (1400\,V_T)(.200)^2 = 56\,V_T$$

At the **terminal** condition we have **Equilibrium.**

$$\therefore \quad (1{,}000)\sin 20° - 56\,V_T = 0$$

$$V_T = \underline{6.11 \quad m/sec}$$

1.15 The shear stress on the cylinder assuming a linear profile is:

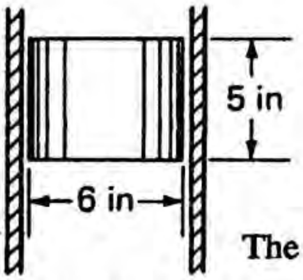


$$\tau = \mu\left(\frac{lb}{ft^2}\sec\right)\frac{V\left(\frac{ft}{\sec}\right)}{\left(\frac{.001}{12}\right)(ft)} = (12{,}000)\mu V \quad \frac{lb}{ft^2}$$

The force of resistance is then

$$f = [(12{,}000)(\mu)(V)](\pi)(\frac{6}{12})(\frac{5}{12})$$

$$= 7850\mu V \; lbf$$

A cylinder of weight 20 lb slides in a lubricated pipe. The clearance between cylinder and pipe is 0.001 in. If the cylinder is observed to decelerate at a rate of 2 ft/s² when the speed is 20 ft/s, what is the viscosity of the oil? The diameter of the cylinder $D$ is 6.00 in and the length $L$ is 5.00 in.

http://ingesolucionarios.blogspot.com Edu_Zegarr_ch

**1.15 (continued)** http://ingesolucionarios.blogspot.com

**Newton's** law then gives us:

$$20 - 7850\mu V = \frac{20}{g}\ (a)$$

At the instant of interest:

$$20 - 7850\mu(20) = -\frac{20}{g}\ (2)$$

Solving for $\mu$ we get:

$$\mu = \frac{\left(20 + \dfrac{40}{g}\right)}{(7850)(20)} = 1.353\times10^{-4}\ \frac{lb\cdot sec}{ft^2}$$

**1.16**

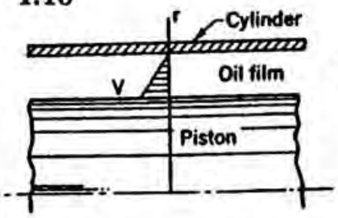


A plunger is moving through a cylinder at a speed of 20 ft/s. The film of oil separating the plunger from the cylinder has a viscosity of 0.020 lb · s/ft². What is the force required to maintain this motion?

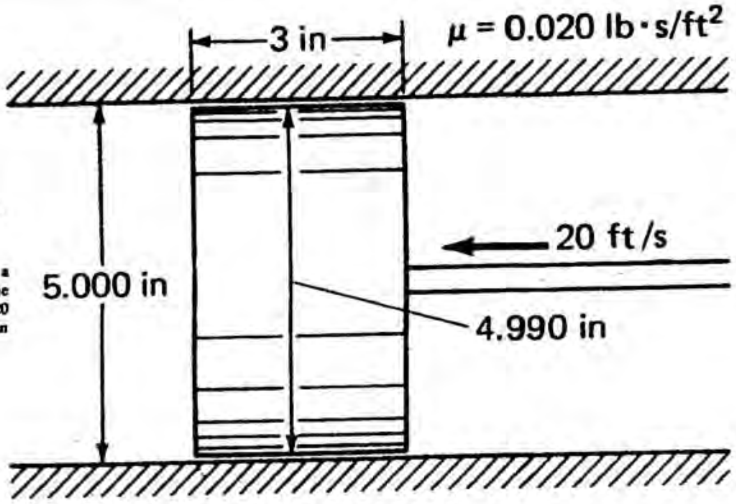


We shall assume that the thickness of the film is uniform over the entire peripheral surface of the plunger. Furthermore, because the film is thin, we shall assume a **linear** velocity profile for the flow of oil in the film. To find the frictional resistance, we must compute the shear stress at the plunger surface. Thus we have:

$$\tau = -\mu\ \frac{\partial V}{\partial r} = 0.020\ \frac{20}{\dfrac{5.000-4.990}{(2)(12)}}$$

$$= 960\ \frac{lb}{ft^2}$$

The frictional force then becomes

$$F_f = \tau A = 960\pi\ \frac{4.990}{12}\ \frac{3}{12} = 314\ \ lbf$$

http://ingesolucionarios.blogspot.com

## 1.17

A vertical shaft rotates in a bearing. It is assumed that the shaft is concentric with the bearing journal. A film of oil of thickness $e$ and viscosity $\mu$ separates the shaft from the bearing journal. If the shaft rotates at a speed of $\omega$ radians per second and has a diameter $D$, what is the frictional torque to be overcome at this speed? Neglect centrifugal effects at the bearing ends and assume a linear velocity profile. What is the power dissipated?

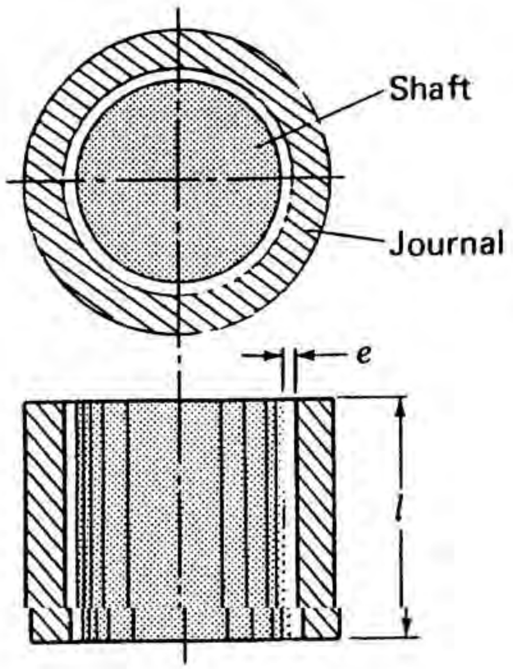


Even though the fluid particles move along lines which are not straight, we can with reasonably good accuracy, still employ **Newton's viscosity law.** Thus, the shear stress $\tau$ on the shaft is:

$$\tau = -\frac{0-\frac{\omega D}{2}}{e}\,\mu$$

The torque is:

$$torque = \frac{\omega D}{2e}\,\mu\,\frac{D}{2}\,\pi D\ell = \frac{\mu\pi D^3\ell\omega}{4e}$$

The power is then

$$P = T\omega = \frac{\mu\pi D^3\ell\omega^2}{4e}$$

http://ingesolucionarios.blogspot.com Edu_Zegarr_ch

http://ingesolucionarios.blogspot.com

**1.18**

We assume at any point that the velocity profile of the oil is linear.

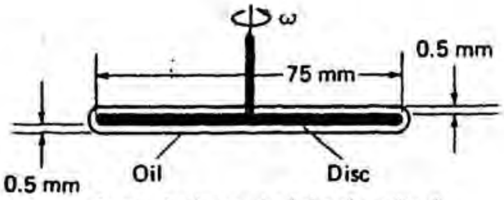


In some electric measuring devices, the motion of the pointer mechanism is dampened by having a circular disc turn (with the pointer) in a container of oil. In this way, extraneous rotations are damped out. What is the damping torque for $\omega = 0.2$ rad/s if the oil has a viscosity of $8 \times 10^{-3}$ $N \cdot s/m^2$? Neglect effects on the outer edge of the rotating plate.

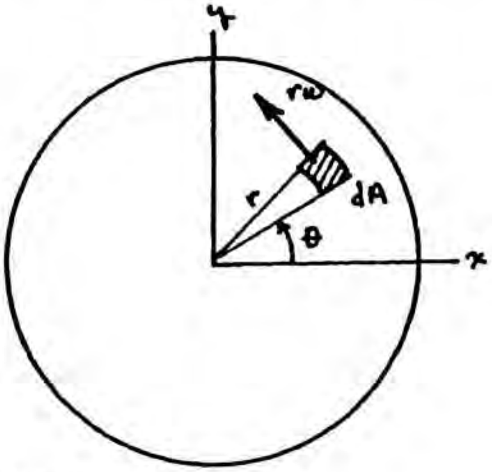


The slope of the profile is then:

$$\frac{\partial V}{\partial n} = \frac{r\omega}{.5\,mm} = \frac{(.2)r}{.0005\,m} = 400r$$

$$\therefore \tau = (400r)(\mu) = 8\times10^{-3}(400r)$$

$$= 3.2r$$

The force $df$ on $dA$ on the upper face of the disc is then:

$$df = \tau dA = (3.2r)(r\,d\theta\,dr)$$

$$= 3.2r^2 d\theta\,dr$$

The torque for $dA$ on upper face is then:

$$dT = 3.2r^3 d\theta\,dr$$

The total resisting torque on both faces is:

$$T = 2\left[\int_0^{.075/2}\int_0^{2\pi} 3.2r^3 d\theta\,dr\right]$$

$$= 6.4\,\frac{r^4}{4}(2\pi)\Bigg|_0^{0.75/2} = 1.988\times10^{-5}\ N\text{-}m$$

http://ingesolucionarios.blogspot.com

**1.19**

For the apparatus in Prob. 1.18, develop an expression giving the damping torque as a function of $x$ (the distance that the midplane of the rotating plate is from its center position). Do this for an angular rotation $\omega = 0.2$ rad/s.

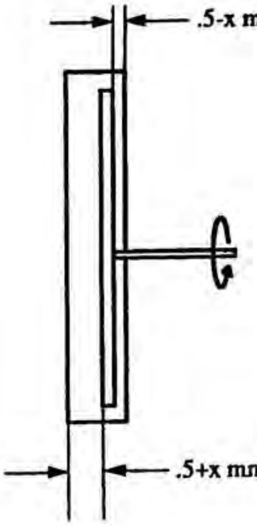


$$Torque = \int_0^{.075/2}\int_0^{2\pi}\left[\frac{r\omega}{(.5-x)(10^{-3})}\right]\mu r(rd\theta dr) + \int_0^{.075/2}\int_0^{2\pi}\left[\frac{r\omega}{(.5+x)(10^{-3})}\right]\mu r(rd\theta dr)$$

$$Torque = \frac{\mu\omega}{(.5-x)(10^{-3})}(2\pi)\frac{\left(\frac{.075}{2}\right)^4}{4} + \frac{\mu\omega}{(.5+x)(10^{-3})}(2\pi)\frac{\left(\frac{.075}{2}\right)^4}{4}$$

$$= \left[\left(\frac{1}{.5-x}\right)+\left(\frac{1}{.5+x}\right)\right]\frac{(8\times10^{-3})}{10^{-3}}(.2)(2\pi)\frac{\left(\frac{.075}{2}\right)^4}{4} = \left[\frac{.5+x\ +\ .5-x}{.25-x^2}\right]4.97\times10^{-6}$$

$$= \frac{4.97\times10^{-6}}{.25-x^2}\ N\cdot m \quad (x\ in\ mm)$$

http://ingesolucionarios.blogspot.com

**1.20**

A conical body is made to rotate at a constant speed of 10 rad/s. A film of oil having a viscosity of $4.5 \times 10^{-5}$ lb · s/ft$^2$ separates the cone from the container. The film thickness is 0.01 in. What torque is required to maintain this motion? The cone has a 2-in radius at the base and is 4 in tall. Use the straight-line-profile assumption and Newton's viscosity law.

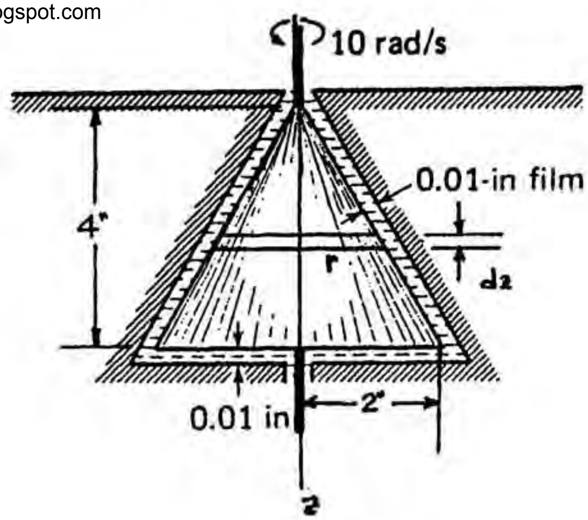


Consider conical surface first. Area of the strip shown is:

$$dA = (2\pi r)(ds) = (2\pi r)\ \frac{dz}{\dfrac{4}{\sqrt{20}}} \qquad \text{(a)}$$

But

$$\frac{r}{2} = \frac{z}{4} \qquad \therefore\ r = \frac{1}{2}z$$

Hence,

$$dA = 2\pi\ \frac{z}{2}\left(\frac{dz}{\dfrac{4}{\sqrt{20}}}\right) = \frac{\sqrt{20}\,\pi}{4}\ zdz$$

The stress on this element is:

$$\tau = \mu\frac{V}{\delta} = \mu\left(\frac{\omega r}{.01}\right) = \frac{\mu(10)\left(\dfrac{z}{2}\right)}{.01} = 500\,\mu z$$

with $z$ in inches. The torque on the strip is

$$dT = \tau(dA)r = (500\,\mu z)\left(\frac{\sqrt{20}\,\pi}{4}\ z\,dz\right)\left(\frac{z}{2}\right) = 878\ \mu z^3 dz$$

The total torque is:

http://ingesolucionarios.blogspot.com Edu_Zegarr_ch

http://ingesolucionarios.blogspot.com

1.20 (cont.)

$$T_1 = \int_0^4 878\, uz^3 dz = 878\,\frac{(4)^4}{4}\,\mu = 56{,}198\mu$$

Subst. for $\mu$ to get in-lb.

$$T_1 = \left(\frac{4.5\times10^{-5}}{144}\right)(56{,}198) = .01756 \quad in-lb$$

Next consider the base. The friction force is:

$$df = \left[\mu\,\frac{(r\omega)}{.01}\right] r\, d\theta\, dr \;=\; 1{,}000\,\mu r^2\, d\theta\, dr$$

Torque for $df$ :

$$dT = 1{,}000\mu r^3 d\theta\, dr$$

Total torque $T_2$

$$T_2 = \int_0^2\int_0^{2\pi} (1{,}000)(\mu) r^3 d\theta\, dr$$

$$T_2 = (1{,}000)\left(\frac{4.5\times10^{-5}}{144}\right)\left(\frac{2^4}{4}\right)(2\pi) = .00785 \quad in\cdot lb$$

The total torque is then:

$$T_{total} = .01756 + .00785 = .0254 \quad in\cdot lb$$

http://ingesolucionarios.blogspot.com Edu_Zegarr_ch

http://ingesolucionarios.blogspot.com

**1.21**

A sphere of radius $R$ rotates at constant speed of $\omega$ rad/s. A thin film of oil separates the rotating sphere from a stationary spherical container. Develop an expression for the resisting torque in terms of $R$, $\omega$, $\mu$, and $e$. Spherical coordinates are shown.

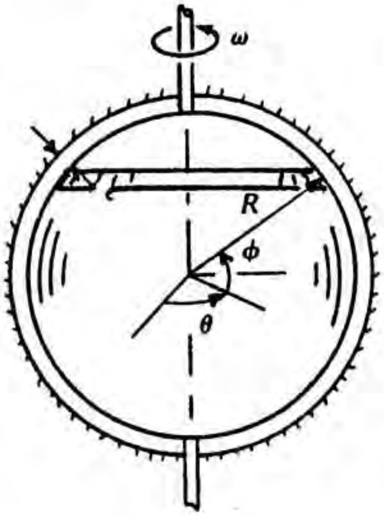


Velocity $V$ of spherical surface is

$$V = R\cos\phi\,\omega$$

Stress from **Newton's viscosity** law:

$$\tau = \mu\frac{V}{e} = \frac{\mu}{e}(R\cos\phi\,\omega)$$

**Torque** increment on strip $R\,d\phi$

$$dT = (\tau)(2\pi R\cos\phi)(R\,d\phi)(R\cos\phi)$$

circumference of strip — width of strip — moment of arm

$$\therefore\quad dT = \frac{\mu}{e}(R\cos\phi\,\omega)(2\pi R\cos\phi)(R\,d\phi)(R\cos\phi) = \frac{2\pi\mu\omega R^4}{e}\cos^3\phi\,d\phi$$

$$T = \frac{2\pi\mu\omega R^4}{e}\int_{-\frac{\pi}{2}}^{\frac{\pi}{2}}\cos^3\phi\,d\phi$$

$$\int_{-\frac{\pi}{2}}^{\frac{\pi}{2}}\cos^3\phi\,d\phi = \frac{1}{3}\sin\phi(\cos^2\phi+2)\Big|_{-\frac{\pi}{2}}^{\frac{\pi}{2}} = \frac{4}{3}$$

$$\therefore\quad T = \left(\frac{2\pi\mu\omega R^4}{e}\right)\left(\frac{4}{3}\right)$$

$$\boxed{T = \frac{8\pi\mu\omega R^4}{3e}}$$

http://ingesolucionarios.blogspot.com
Edu_Zegarr_ch

http://ingesolucionarios.blogspot.com

**1.22**

An African hunter is operating a blow gun with a poison dart. He maintains a constant pressure of 5 kPa gage behind the poison dart, which has a weight of $\frac{1}{2}$ N and a peripheral area directly adjacent to the inside surface of the blow gun of 1500 mm². The average clearance of this 1500-mm² peripheral area of the dart with the inside surface of the gun is 0.01 mm when shooting directly upward (at a bird in a tree). What is the speed of the dart on leaving the blow gun when fired directly upward? The inside surface of the gun is dry with air and vapor from the hunter's breath as the lubricating fluid between dart and gun. This mixture has a viscosity of $3 \times 10^{-5}$ N · s/m². *Hint:* Express $dV/dt$ as $V(dV/dx)$ in Newton's law.

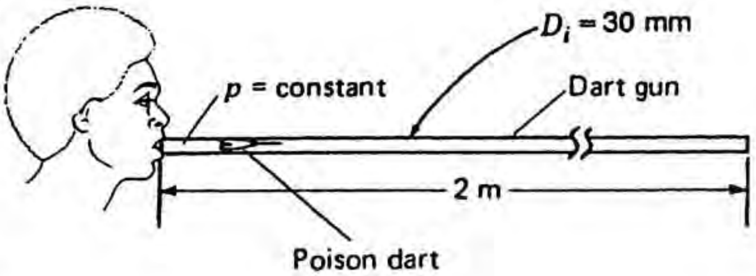


The shear force is: $$f_s = \mu \frac{\partial V}{\partial r}(A) = (3\times10^{-5})\left(\frac{V}{(.01)\times10^{-3}}\right)(1{,}500)(10^{-6}) = .0045\ V\ N$$

<u>Newton's Law</u>: $$p\,\frac{\pi D_i^2}{4} - W - .0045V = \frac{W}{g}V\frac{dV}{dx}$$

$$(5{,}000)\frac{(\pi)(.030)^2}{4} - .5 - .0045V = \frac{.5}{9.81}\frac{VdV}{dx}$$

$$3.534 - .5 - .0045V = \frac{.5}{9.81}\frac{VdV}{dx}$$

$$674 - V = 11.33\frac{VdV}{dx}$$

Separate variables: $$dx = 11.33\left(\frac{VdV}{674-V}\right)$$

Integrating:

$$x = 11.33[(674-V) - 674(\ln 674-V)] + C$$

When $x = 0$ , $V = 0$ . Hence $$0 = 11.33[674 - 674\ln 674] + C$$

$$C = 42{,}101$$

$$\therefore x = 11.33[(674-V) - 674\ln(674-V)] + 42.101\times10^3$$

Set $x = 2m$ . Solve by trial and error. $V = 16.55$ *m*/sec

$$\therefore \quad \boxed{V = 16.55\ m/\text{sec}}$$

http://ingesolucionarios.blogspot.com Edu_Zegarr_ch

http://ingesolucionarios.blogspot.com

1.23

If specific volume $v$ is given in units of volume per unit mass, and density $\rho$ is given in terms of mass per unit volume, how are they related? Also, if specific weight $\gamma$ is given in units of weight per unit volume, how is it related to the other quantities?

$$(v) = \left(\frac{L^3}{M}\right)$$

$$(\rho) = \left(\frac{M}{L^3}\right) \qquad \therefore\ v = \frac{1}{\rho}$$

$$(\gamma) = \left(\frac{F}{L^3}\right)$$

$$\therefore \begin{cases} \gamma = \rho g \\ \gamma = \dfrac{g}{v} \end{cases}$$

1.24

What are the dimensions of $R$, the gas constant, in Eq. (1.89) Using for air the value 53.3 for $R$ for units degrees Rankine, pound-mass, pound-force, and feet, determine the specific volume of air at a pressure of 50 lb/in$^2$ absolute and a temperature of 100°F.

$$pv = RT \qquad \therefore\ R = \frac{pv}{T}$$

$$(R) = \frac{\left(\frac{F}{L^2}\right)\left(\frac{L^3}{M}\right)}{(°R)} = \left(\frac{FL}{M°R}\right)$$

$\therefore$ for air

$$R = 53.3\ \frac{ft\text{-}lbf}{lbm°R}$$

$$v = \frac{RT}{p} = \frac{(53.3)(460+100)}{(50)(144)}$$

$$\boxed{v = 4.15\ ft^3/lbm}$$

http://ingesolucionarios.blogspot.com Edu_Zegarr_ch

http://ingesolucionarios.blogspot.com

1.25

A perfect gas undergoes a process whereby its pressure is doubled and its specific volume is decreased by two-thirds. If the initial temperature is 100°F, what is the final temperature in degrees Fahrenheit?

$$T_1 = 100°F \qquad \frac{p_2}{p_1} = 2 \qquad \upsilon_2 = \frac{1}{3}\,\upsilon_1$$

$$p_1\upsilon_1 = RT_1$$

$$p_2\upsilon_2 = RT_2$$

Divide

$$\frac{p_1}{p_2}\,\frac{\upsilon_1}{\upsilon_2} = \frac{T_1}{T_2} \qquad \left(\frac{1}{2}\right)\left(\frac{3}{1}\right) = \frac{560}{T_2}$$

$$T_2 = \left(\frac{2}{3}\right)(560) = 373°R$$

$$\therefore \quad \boxed{\therefore \; T_2 = 373 - 460 = -87}$$

1.26 Initially we can say from the equation of state: $p_1\upsilon_1 = RT_1$

$$\therefore \; (200)(1{,}000)(\upsilon_1) = (287)(303) \qquad \upsilon_1 = .435\,\frac{m^3}{kg}$$

If the volume $V_1$ is $80L$, then the mass of the gas is: $V_1 = (80)(.001)\,m^3$

$$\therefore \; M = \frac{(80)(.001)}{.435} = .1839\;kg$$

At the final stage, $p_2\upsilon_2 = RT_2$

$$(500\times10^3)\left[\frac{40\times10^{-3}}{M-.003}\right] = (287)(T_2)$$

$$\boxed{T_2 = 385°K = 112.2°C}$$

In order to reduce gasoline consumption in city driving, the Department of Energy of the federal government is studying the so-called "inertial transmission" system. In this system, when drivers want to slow up, the wheels are made to drive pumps which pump oil into the compressor tank so as to increase the pressure of the trapped air in the tank. The pumps thus act as brakes. As long as the pressure in the tank stays above a certain minimum value, the tank can supply energy to the aforestated pumps, which then act as motors to drive the wheels when a driver wishes to accelerate. If sufficient braking does not take place to keep the air pressure up, a conventional gas engine cuts in to build up the pressure in the tank. It is expected that a doubling of mileage per gallon can take place in city driving by this system.

Suppose that the volume of air initially in the tank is 80 L and the temperature is 30°C with a pressure of 200 kPa gage. As a result of braking on going down a long hill, the volume decreases to 40 L and the air reaches a pressure of 500 kPa gage. What is the final temperature of the air if there is a loss of air due to a leak of 0.003 kg?

http://ingesolucionarios.blogspot.com

Edu_Zegarr_ch

**1.27** Use equation of state initially. $$p_1 \frac{V_1}{M} = RT_1$$

For Prob. 1.26 suppose that the initial volume of air in the tank is 80 L at a pressure of 120 kPa at $T = 20°C$. The gasoline engine cuts in to double the pressure in the tank while the volume is decreased to 50 L. What is the final temperature and density of the air?

$$(120\times10^3)\left[\frac{(80\times10^{-3})}{M}\right] = (287)(293) \qquad M = .1142\ kg$$

At final state: $$p_2\left(\frac{V_2}{M}\right) = RT_2$$

$$(2)(120)(10^3)\left(\frac{50\times10^{-3}}{.1142}\right) = (287)(T_2)$$

$$T_2 = 366\ K = 93.1°C$$

$$\rho = \frac{.1142}{50\times10^{-3}} = 2.28\ \frac{kg}{m^3}$$

**1.28** $$p\left(\frac{V}{nM}\right) = RT$$

As you may recall from chemistry, a *pound-mole* of a gas is the number of pounds-mass of the gas equal to its molecular weight $M$. For 2 lb-mol of air with a molecular weight of 29, a temperature of 100°F, and a pressure of 2 atm, what is the volume $V$? Show that $pv = RT$ can be expressed as $pV = nMRT$, where $n$ is the number of moles.

$$(2)(14.7)(144)\left[\frac{V}{(2)(29)}\right] = (53.3)(560)$$

$$V = 408.9\ ft^3$$

From Eq. (1)

$$pV = nMRT$$

**1.29**

You may recall from chemistry that the gas constant $R$ for a particular gas can be determined from a universal gas constant $R_u$, having a constant value for all perfect gases, and the molecular weight $M$ of the particular gas. That is, $R = R_u/M$.

The value of $R_u$ in USCS is $R_u = 49{,}700\ ft^2/(s^2)(°R)$.

Show that for SI units, we get, $R_u = 8310\ m^2/(s^2)(K)$. What is the gas constant $R$ for helium in SI units?

$$R_u = 49{,}700 ft^2 \frac{1m^2}{(3.28\ ft)^2 \cdot s^2 \cdot (R)\ \frac{(5/9)K}{(R)}}$$

$$= 8{,}310\ \frac{m^2}{s^2 \cdot K}$$

$$R = \frac{8{,}310}{M} = \frac{8{,}310}{4} = 2{,}077\ \frac{m^2}{s^2 \cdot K}$$

1.30 There are two surfaces exerting surface forces on the wire. Hence for force $F$ is:

A thin, circular wire is being lifted from contact with water. What force $F$ is required for this action over and above the weight of the wire? The water forms a zero degree contact angle with the outermost and innermost peripheries of the wire for certain metals such as platinum. Compute $F$ for a platinum wire. Explain how you could use this system to measure $\sigma$.

$$F = 2[(2\pi r)(\sigma)] = (2\pi)(.200)(.0730)(2) = 0.1835\ N$$

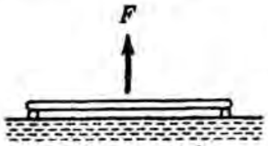


You could measure $F$ experimentally and then compute $\sigma$ from this formula.

$$F = 2[2\pi r]\sigma$$

1.31 Because the plates are clean, the angle of contact between the water and the glass is taken as zero. Consider the free body diagram of a unit width of the raised water away from the ends.

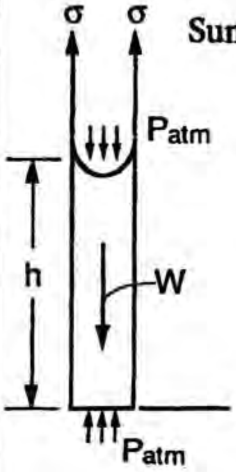


Summing forces in the vertical direction we have

$$2[(\sigma)(L)] - (Ld)(h)(\gamma) = 0$$

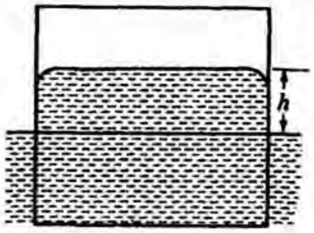


$$2(.0730) - (.001)(h)(9806) = 0$$

$$\boxed{h = 14.89\ mm}$$

Two parallel, wide, clean, glass plates separated by a distance $d$ of 1 mm are placed in water. How far does the water rise due to capillary action away from the ends of the plates? *Hint:* See footnote 10.

1.32 http://ingesolucionarios.blogspot.com

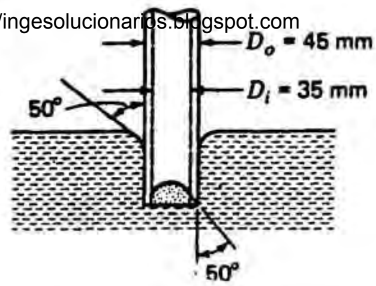


$$F = \sigma(\pi D_0)\cos 50° + \sigma(\pi D_i)\cos 50°$$

$$= (0.514)(\pi)(.045)(.643) + (0.514)(\pi)(.035)(.643)$$

$$F = .0831\ N$$

A glass tube is inserted in mercury. What is the upward force on the glass as a result of surface effects? Note that the contact angle is 50° inside and outside. Temperature is 20°C.

1.33

Compute an approximate distance $d$ for mercury in a glass capillary tube. The surface tension $\sigma$ for mercury and air here is 0.514 N/m, and the angle $\theta$ is 40°. The specific gravity of mercury is 13.6. *Hint:* The pressure $p_{gage}$ below the main free surface is the specific weight times the depth below the free surface. Do your assumptions render the actual $d$ larger or smaller than the computed $d$?

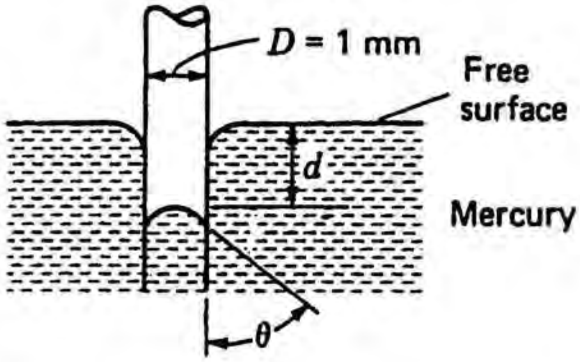


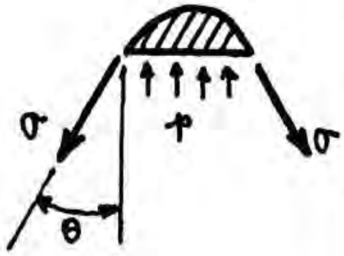


Consider as a free body the meniscus of the mercury. Neglect the **weight** of this free body. We have for equilibrium:

$$-(\sigma)(\pi D)(\cos\theta) + p\left(\frac{\pi D^2}{4}\right) = 0$$

$$-(.514)(\pi)(.001)\cos 40° + (13.6)(9806)(d)\ \frac{(\pi)(.001)^2}{4} = 0$$

$$\boxed{d = 11.81\ mm}$$

Actual $d$ must be larger because we neglected weight at meniscus.

1.34

A narrow tank with one end open is filled with water at 45°C carefully and slowly to get the maximum amount of water in without spilling any water. If the pressure gage measures a gage pressure of 2943.7 Pa, what is the radius of curvature of the water surface at the top of the surface away from the ends? Take $\sigma$ = 0.0731 N/m.

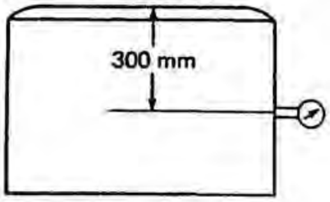

At the top of the water surface

$$\Delta p = 2{,}943.7 - (9{,}806)(.300) = 1.900\ \ Pa\ gauge$$

Going to Eq. (1.11), we have

$$\Delta p = 1.900 = \sigma\left(\frac{1}{R_1} + \frac{1}{\infty}\right) = \frac{\sigma}{R_1}$$

$$\therefore\ R_1 = \frac{(.0730)}{1.900} = .0384\ m = \boxed{38.42\ \ mm}$$

http://ingesolucionarios.blogspot.com Edu_Zegarr_ch

Water at 10°C is poured into a region between concentric cylinders until water appears above the top of the open end. If the pressure measured by the gage is 3970.80 Pa gage, what is the curvature of the water at the top? Using the Taylor series, estimate the height $h$ of the water above the edge of the cylinders. Assume that the highest point of the water is at the midradius of the cylinders.

1.35 To find $\Delta p$ to be used in Eq. (1.10) we have:

$$\Delta p = 3970.80 - (9803)(.402) = 30\ Pa$$

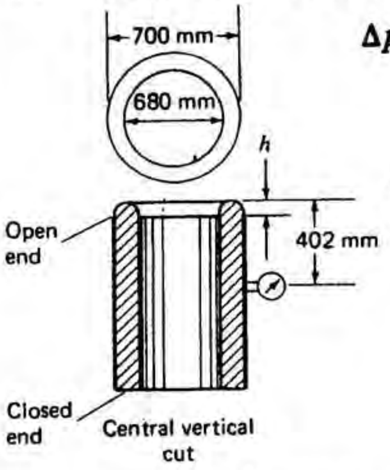


$$\therefore\ \Delta p = 30 = (.0730)\left[\left(\frac{d^2y}{dr^2}\right) + 0\right]$$

$$\therefore\ \frac{d^2y}{dr^2} = 411\ m^{-1}$$

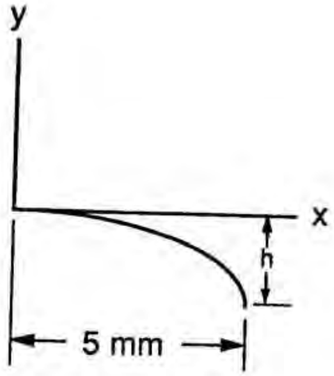


$$h = 0 + \frac{dy}{dx}(.005) + \frac{d^2y}{dx^2}\left(\frac{.005^2}{2}\right) + \ldots$$

$$= 0 + 0 + (411)\left(\frac{(.005)^2}{2}\right) + \ldots$$

$$\boxed{h \sim 5.14\ \ mm}$$

http://ingesolucionarios.blogspot.com

1.36

Given the velocity field

$$\mathbf{V}(x, y, z, t) = (6xy^2 + t)\mathbf{i} + (3z + 10)\mathbf{j} + 20\mathbf{k} \quad m/s$$

with $x, y, z$ in meters and $t$ in seconds, what is the velocity vector at position $x = 10$ m, $y = -1$ m, and $z = 2$ m when $t = 5$ s? What is the magnitude of this velocity?

$$\vec{V} = (6xy^2+t)\hat{i} + (3z+10)\hat{j} + 20\hat{k}$$

$$= [(6)(10)(1)+5]\hat{i} + [(3)(2)+10]\hat{j} + 20\hat{k}$$

$$= 65\hat{i} + 16\hat{j} + 20\hat{k} \ m/sec$$

$$|\vec{V}| = \sqrt{65^2+16^2+20^2} = 69.86 \ m/sec$$

1.37

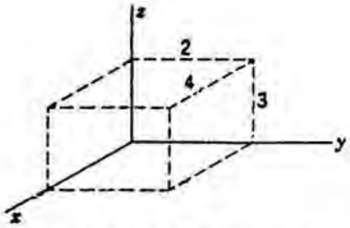


A body-force distribution is given as

$$\mathbf{B} = 16x\mathbf{i} + 10\mathbf{j} \quad N/kg$$

per unit mass of the material acted on. If the density of the material is given as

$$\rho = x^2 + 2z \quad kg/m^3$$

what is the resultant body force on material in the region shown in the diagram?

$$\vec{F} = \iiint_M \vec{B}\, dm = \iiint_V \vec{B}\rho\, dv$$

$$= \int_0^3\int_0^2\int_0^4 (16x\hat{i}+10\hat{j})(x^2+2z)dxdydz$$

$$= \int_0^3\int_0^2\int_0^4 (16x^3\hat{i}+32xz\hat{i}+10x^2\hat{j}+20z\hat{j})dxdydz$$

$$= \int_0^3\int_0^2 \left[\left(\frac{16x^4}{4} + \frac{32x^2z}{2}\right)\hat{i} + \left(\frac{10x^3}{3} + 20zx\right)\hat{j}\right]_0^4 dydz$$

$$= \int_0^3\int_0^2 (1024+256z)\hat{i}+(213.3+80z)\hat{j}\,dydz$$

$$= \int_0^3 [(1024)(2)+(256)(z)(2)]\hat{i}+[(213.3)(2)+(80z)(2)]\hat{j}dz$$

$$= \int_0^3 [(2048+512z)\hat{i}+(426.6+160z)\hat{j}]dz$$

$$= [(2048)(3) + \frac{512}{2}(3^2)]\hat{i}+[426.6(3) + \frac{160}{2}3^2]\hat{j}$$

$$\boxed{\vec{F} = 8{,}448\hat{i} + 1{,}999.8\hat{j} \quad N}$$

http://ingesolucionarios.blogspot.com Edu_Zegarr_ch

1.38

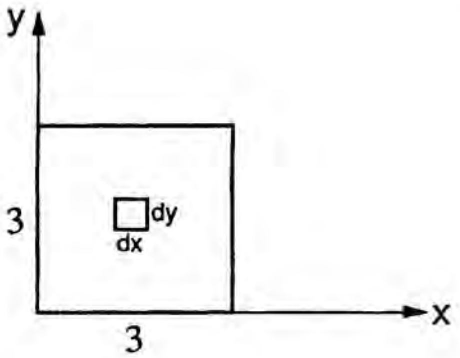


**Oil is moving over a flat surface. We are observing this flow from above in the diagram. A traction force field T is developed on the flat surface given as**

$$\mathbf{T} = (6y+3)\mathbf{i} + (3x^2+y)\mathbf{j} + (5+x^2)\mathbf{k} \quad \text{lb/ft}^2$$

**What is the total force on the 3 × 3 square of area shown in the diagram.**

On flat surface we have:

$$\vec{F} = \int_0^3\int_0^3 [(6y+3)\hat{i}+(3x^2+y)\hat{j}+(5+x^2)\hat{k}]dxdy$$

$$= \int_0^2 \{[(6y)(3)+(3)(3)]\hat{i} + \left[\frac{(3)(27)}{3} + y(3)\right]\hat{j} + \left[(5)(3) + \frac{(3^3)}{3}\right]\hat{k}\}dy$$

$$= \int_0^3 \{[18y+9]\hat{i}+[27+3y]\hat{j} + [24]\hat{k}\}dy$$

$$= \left\{\left(18\,\frac{(3)^2}{2} + (9)(3)\right)\hat{i} + \left[(27)(3) + \frac{(3)(3^2)}{2}\right]\hat{j}+[(24)(3)]\hat{k}\right\}$$

$$\boxed{\vec{F} = 108\hat{i} + 94.5\hat{j} + 72\hat{k} \quad lb}$$

1.39

a) $\vec{T} = 2{,}000\hat{i} + 500\hat{j} + 1{,}000\hat{k}$

b)

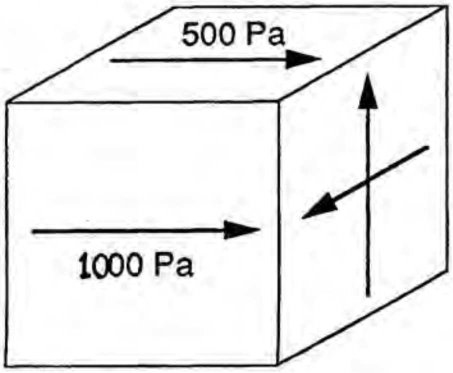


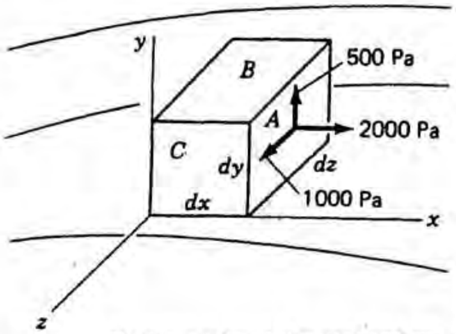


The stresses on face *A* of an infinitesimal rectangular parallelepiped of fluid in a flow are shown at time *t*. What is the traction vector for this face at the instant shown? What can you say about shear stresses on faces *B* and *C* at this instant?

## 1.40

Explain why in hydrostatics the traction force exerted on an area element by the fluid is always normal to the area element of the boundary.

In a static fluid there can be no shear stress and so there is only normal stress on the area element. This can only result in a force normal to the area element.

## 1.41

Label Fig. using the convention set forth i

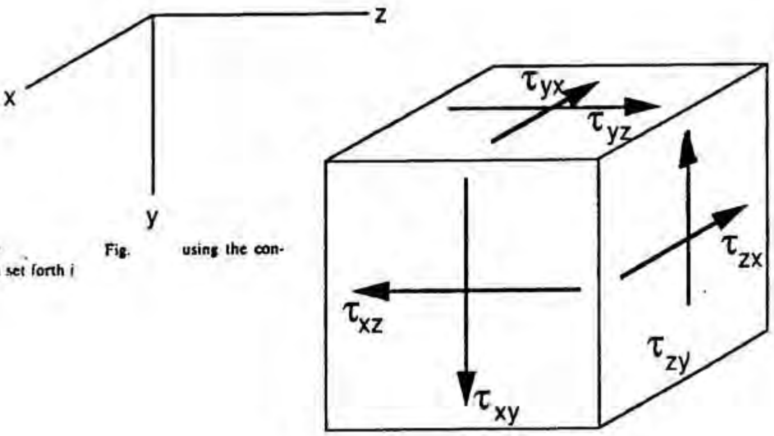


## 1.42

We are given the following stress field in megapascals:

$$\tau_{xx} = 16x + 10 \qquad \tau_{zz} = \tau_{xz} = \tau_{yz} = 0$$

$$\tau_{yy} = 10y^2 + 6xy$$

$$\tau_{xy} = -5x^2$$

Express the bulk stress distribution as a scalar field. What is the bulk stress at (0, 10, 2) m?

$$\bar{\sigma} = \frac{1}{3}(\tau_{xx} + \tau_{yy} + \tau_{zz})$$

$$= \frac{1}{3}(16x + 10 + 10y^2 + 6xy + 0)$$

$$= (5.33x + 3.33y^2 + 2xy + 3.33)\ MPa$$

At (0,10,2) we have:

$$\bar{\sigma} = 333 + 3.33 = \boxed{336\ MPa}$$

http://ingesolucionarios.blogspot.com

1.43

In a viscous flow, the stress tensor at a point is

$$\tau_{ij} = \begin{bmatrix} -4000 & 3000 & 1000 \\ 3000 & 2000 & -1000 \\ 1000 & -1000 & -5000 \end{bmatrix} \text{ lb/in}^2$$

What is the thermodynamic pressure at this point?

$$\bar{\sigma} = \frac{1}{3}(-4{,}000 + 2{,}000 = 5{,}000)$$

$$= -2{,}333 \; psi$$

$$\boxed{p = 2{,}333 \quad psi}$$

1.44

A vector field may be formed by taking the gradient of a scalar field. If $\phi = xy + 16t^2 + yz^3$, what is the field **grad** $\phi$? What is the magnitude of the vector **grad** $\phi$ at position (0, 3, 2) when $t = 0$?

$$\phi = xy + 16t^2 + yz^3$$

$$\nabla\phi = y\hat{i} + (x+z^3)\hat{j} + 3yz^2\hat{k}$$

At (0,3,2) and $t$=0

$$\nabla\phi = 3\hat{i} + 8\hat{j} + 36\hat{k}$$

$$|\nabla\phi| = \sqrt{3^2+8^2+36^2} = 37.0$$

1.45

$$p = xy + (x+z^2) + 10$$

$$\nabla p = (y+1)\hat{i} + x\hat{j} + 2z\hat{k} \quad kN/m^3$$

$$\vec{f} = -\nabla p = -(y+1)\hat{i} - x\hat{j} - 2z\hat{k} \quad kN/m^3$$

At (10,3,4)

$$\vec{f} = -4\hat{i} - 10\hat{j} - 8\hat{k} \quad kN/m^3$$

$$\hat{e} = .95\hat{i} + .32\hat{j} \; m$$

$$\therefore \; \vec{f}\cdot\hat{e} + (-4)(.95) - (10)(.32) + 0$$

$$\boxed{= -7 \quad kN/m^3}$$

http://ingesolucionarios.blogspot.com
Edu_Zegarr_ch

http://ingesolucionarios.blogspot.com

1.46

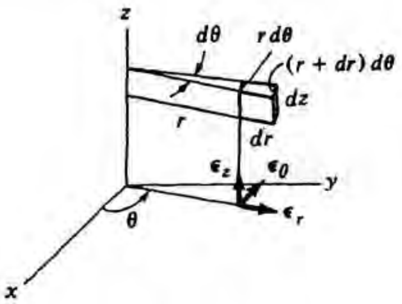


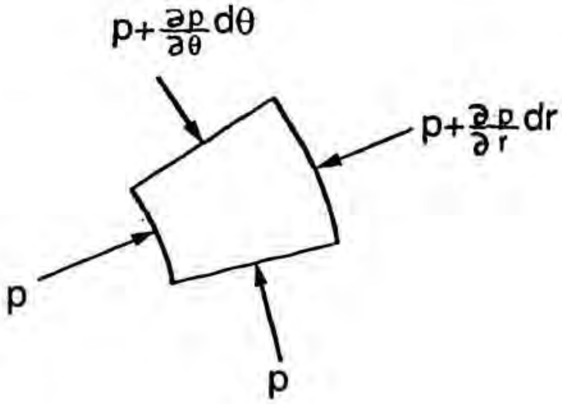


$$dF_r = \left[prd\theta - \left(p + \frac{\partial p}{\partial r}dr\right)(r+dr)d\theta\right]dz$$

$$+ \, p\,drdz \, \sin\frac{d\theta}{2} + \left(p + \frac{\partial p}{\partial \theta}d\theta\right)drdz \, \sin\frac{d\theta}{2}$$

$$= -p\,drd\theta dz - \frac{\partial p}{\partial r}dr\,r\,d\theta dz - \frac{\partial p}{\partial r}drdrd\theta dz$$

$$+ \, pdrdzd\theta + \frac{\partial p}{\partial \theta}d\theta drdz\frac{d\theta}{2}$$

Drop second-order terms and cancel where possible.

$$dF_R = -\frac{\partial p}{\partial r}rd\theta drdz = -\frac{\partial p}{\partial r}d\upsilon$$

$$dF_\theta = p\,drdz \, \cos\frac{d\theta}{2} - \left(p + \frac{\partial p}{\partial \theta}d\theta\right)\left(drdz \, \cos\frac{d\theta}{2}\right)$$

$$= -\frac{\partial p}{\partial \theta}d\theta drdz = -\frac{\partial p}{r\partial \theta}d\upsilon$$

$$dF_z = prd\theta dr - \left(p + \frac{\partial p}{\partial z}dz\right)rd\theta dr$$

$$= -\frac{\partial p}{\partial z}rd\theta drdz$$

$$\therefore \quad d\vec{F} = -\frac{\partial p}{\partial r}d\upsilon \; \hat{e}_r - \frac{\partial p}{r\partial \theta}d\upsilon \; \hat{e}_\theta - \frac{\partial p}{\partial z}d\upsilon \; \hat{e}_z$$

$$\frac{d\vec{F}}{d\upsilon} = -\nabla p = -\left(\frac{\partial p}{\partial r}\hat{e}_r + \frac{\partial p}{r\partial \theta}\hat{e}_\theta + \frac{\partial p}{\partial z}\hat{e}_z\right) \qquad \therefore \quad \nabla = \frac{\partial}{\partial r}\hat{e}_r + \frac{\partial}{r\partial \theta}\hat{e}_\theta + \frac{\partial}{\partial z}\hat{e}_z$$

http://ingesolucionarios.blogspot.com
Edu_Zegarr_ch

http://ingesolucionarios.blogspot.com

# CHAPTER 2

http://ingesolucionarios.blogspot.com Edu_Zegarr_ch

2.1 A reference for which Newton's law in the form $\vec{f} = m\vec{a}$ is valid where $\vec{a}$ is measured relative to this reference.

If the acceleration of gravity were to vary as $K/z^2$, where $K$ is a constant, how would the density have to vary if Eq. (2.2) were to be valid?

2.2

$$g = \frac{K}{z^2}$$

$$\frac{dp}{dz} = -\rho\left(\frac{K}{z^2}\right)$$

To keep right side as a constant so as to permit integration to Eq. 3.4 we require that:

$$\rho\left(\frac{K}{z^2}\right) = \gamma \qquad \therefore \qquad \therefore \quad \rho = \frac{\gamma z^2}{K}$$

2.3

The deepest point under water is the Mariana Trench east of Japan where the depth is 11.3 km. What is the pressure there
(*a*) in absolute pressure?
(*b*) in gage pressure?
The average specific gravity of seawater there we estimate as 1.300.

$$p = \gamma d = (1.300)(9{,}806)(11.3)(1{,}000) + 101{,}325$$

$$= 1.4415\times10^5 \quad k\,Pa\,abs.$$

$$p = (1.3)(9{,}806)(11.3)(1{,}000)$$

$$= 1.4405\times10^5 \quad k\,Pa\,gauge$$

http://ingesolucionarios.blogspot.com

Prove that the free surface of a static liquid must be normal to the direction of gravity.

2.4

Along the free surface the pressure must be uniform (For Fig. 3.1 this pressure is $p_{atm}$). If $xy$ axes are taken in the free surface, this means that along the free surface

$$\frac{\partial p}{\partial x} = 0 \qquad \frac{\partial p}{\partial y} = 0$$

But these correspond to the equations of equilibrium [Eq. (3.1)]. Hence the $z$ direction must be that of gravity. Thus the free surface is normal to the direction of gravity.

Two identical containers, each open to the atmosphere, are initially filled with the same liquid ($\rho = 700\ \text{kg/m}^3$) to the same level $H$ .... The two containers are connected by a pipe in which a frictionless piston of cross section $A = 0.05\ \text{m}^2$ is made to slide slowly. How much work is done by water on the piston in moving a distance of $L = 0.1$ m? The cross section of each container is *twice* that of the pipe.

2.5

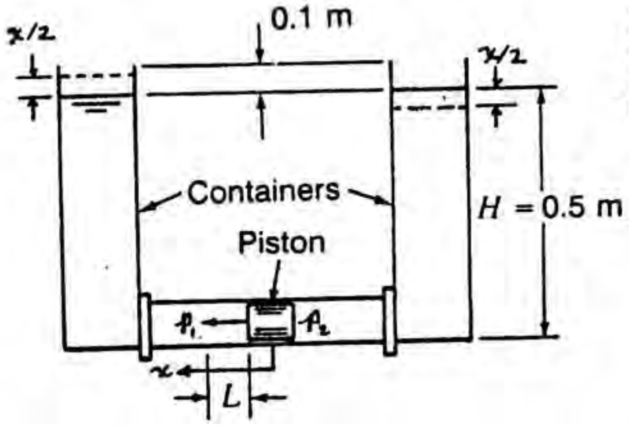


Assume quasi-static process. At a position $x$ of piston, we have from hydrostatics:

$$p_1 = \gamma\left(H + \frac{x}{2}\right) \text{ gauge} \quad ; \quad p_2 = \gamma\left(H - \frac{x}{2}\right) \text{ gauge}$$

$$\therefore \quad Work = \int_1^2 pAdx = \int_0^{.1} (p_2 - p_1)Adx$$

$$Work = -\gamma \int_0^{.1} x(.05)dx = -(700)(9.81)(.05)\,\frac{(.1)^2}{2}$$

$$\boxed{Work = -1.717 \quad N\text{-}m}$$

2.6

Do Prob. 2.5 for the case where the containers are closed and the air above the free surface is at a pressure $p_0$ of 200 kPa gage. The air expands isentropically in the container on the right side and is compressed isothermally for the container on the left side. $R = 287\ N \cdot m/kg\ K$.

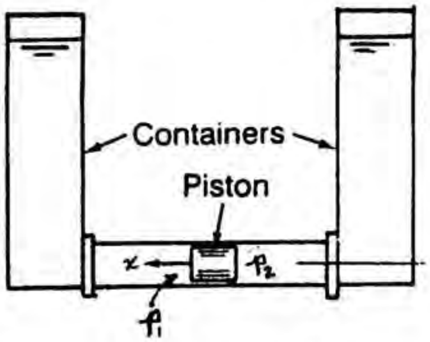


Determine pressures of air as functions of $x$:

$$(p_{air})_1 = \frac{.1}{\left(.1 - \frac{x}{2}\right)}(301{,}325)$$

$$(p_{air})_2 = \left(\frac{.1}{.1 + \frac{x}{2}}\right)^k (301{,}325)$$

Pressure at piston faces as functions of $x$ :

$$p_1 = \frac{.1}{.1 - \frac{x}{2}}(301{,}325) + 700g\left(h + \frac{x}{2}\right)$$

$$p_2 = \left(\frac{.1}{.1 + \frac{x}{2}}\right)^k (301{,}325) + 700g\left(h - \frac{x}{2}\right)$$

Work on piston by water:

$$W_k = \int_0^{-1}(p_2 - p_1)A\,dx$$

$$W_k = \int_0^{.1}\left(\frac{.2}{.2+x}\right)^{1.4}(301{,}325)(.05)dx - \int_0^{.1}\left(\frac{60{,}265}{.2-x}\right)(.05)dx - 6{,}867\int_0^{.1}x(.05)dx$$

$$= (301{,}325)(.2)^{1.4}(.05)\,\frac{(.2+x)^{-.4}}{(-.4)}\Big|_0^{.1} + (60{,}265)(.05)\ln(.2-x)\Big|_0^{.1} - (6{,}867)(.05)\frac{x^2}{2}\Big|_0^{.1}$$

$$= 1{,}128 + 2{,}089 - 1.717 = 3{,}214\ N\text{-}m$$

http://ingesolucionarios.blogspot.com

2.7

A cylindrical tank contains water at a height of 50 mm. Inside is a smaller open cylindrical tank containing kerosene at height $h$ having a specific gravity of 0.8. The following pressures are known from the indicated gages:

$$p_B = 13.80 \text{ kPa gage}$$

$$p_C = 13.82 \text{ kPa gage}$$

What are the gage pressure $p_A$ and the height $h$ of the kerosene? Assume that the kerosene is prevented from moving to the top of the tank.

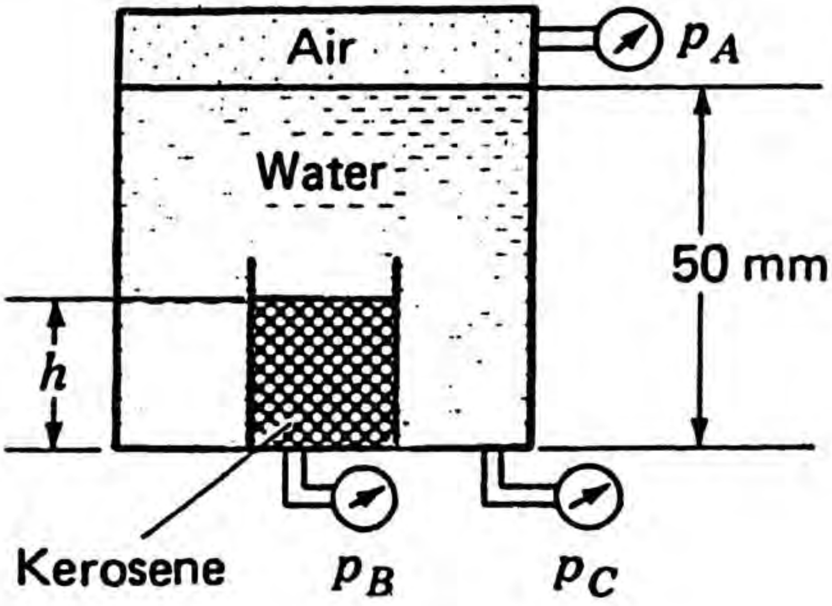


$$p_C = p_A + \gamma_{H_2O}(.050) = p_A + (9{,}806)(.050) = p_A + 490 \qquad (1)$$

$$p_B = p_A + \gamma_{H_2O}(.050-h) + .8\gamma_{H_2O}h = p_A + (9{,}806)(.050-h) + (.8)(9{,}806)(h) \qquad (2)$$

$$= p_A + 490 - 1{,}961h$$

Subtract (2) from (1). $\qquad p_C - p_B = 1{,}961h$

$\therefore \quad 13.82\times10^3 - 13.80\times10^3 = 1{,}961h \qquad\qquad h = 10.20\ mm$

Go back to Eq. (1). $\qquad p_C = 13.82\times10^3 = p_A + 490$

$$\boxed{p_A = 13.33\ kPa}$$

http://ingesolucionarios.blogspot.com

Find the difference in pressure between tanks $A$ and $B$ if $d_1 = 300$ mm, $d_2 = 150$ mm, $d_3 = 460$ mm, $d_4 = 200$ mm, and $S_{Hg} = 13.6$.

2.8

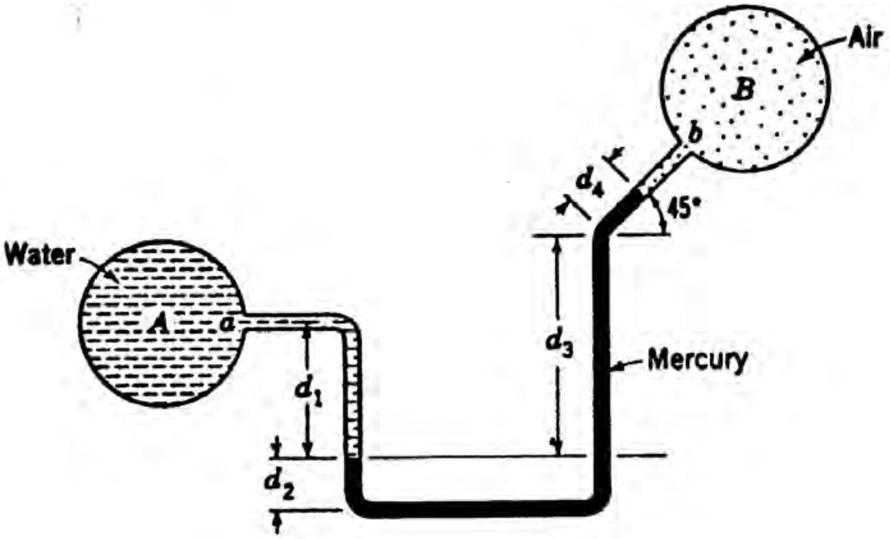


$$p_N = p_A + \gamma_{H_20}\, d_1$$

$$p_M = p_B + \gamma_{Hg}(d_4 \sin 45° + d_3)$$

$$\therefore \quad p_A + \gamma_{H_20}\, d_1 = p_B + \gamma_{Hg}(d_4 \sin 45° + d_3)$$

$$(p_A - p_B) = -(9{,}806)(.3) + (9{,}806)(13.6)[(.2)(.707) + .46] = \boxed{77{,}262\ Pa}$$



http://ingesolucionarios.blogspot.com Edu_Zegarr_ch

http://ingesolucionarios.blogspot.com

2.9

An open tube is connected to a tank. The water rises to a height of 900 mm in the tube. A tube used in this way is called a *piezometer*. What are the pressures $p_A$ and $p_B$ of the air above the water? Neglect capillary effects in the tube.

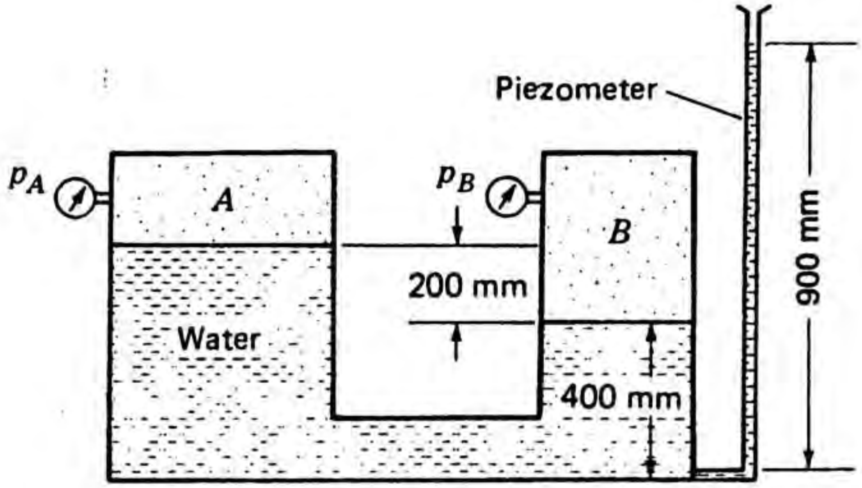


At the level of the free surface in tank $B$, we equate pressures from tanks $A$ and $B$.

$$p_A + (9{,}806)(.200) = p_B \qquad \therefore\ p_B - p_A = 1{,}961 \qquad (1)$$

Considering pressure at the bottom of the tanks for the piezometer and the tank $A$, we have:

$$p_B + (9{,}806)(.400) = (9{,}806)(.900) \qquad \therefore\ p_B = 4{,}903\ Pa$$

Now go to Eq. (1). $\quad 4{,}903 - p_A = 1{,}961$

$$\boxed{p_A = 2{,}942\ Pa}$$



http://ingesolucionarios.blogspot.com Edu_Zegarr_ch

http://ingesolucionarios.blogspot.com

2.10

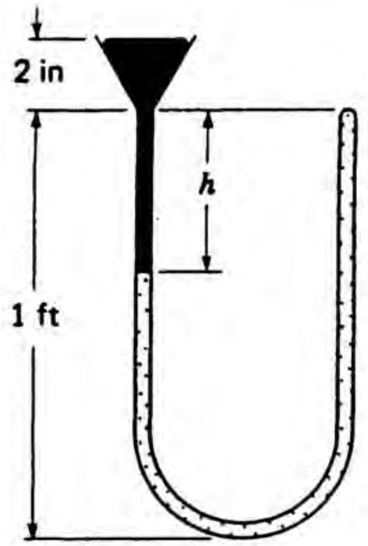


Consider the U tube with one end closed and the other end having a funnel of height 2 in. Mercury is poured into the funnel to trap the air in the tube, which is 0.1 in in inside diameter and 3 ft in total length. Assuming that the trapped air is compressed isothermally, what is $h$ when the funnel starts to run over? Neglect capillary effects for this problem.

$$p_h = p_{atm} + \left(\frac{2}{12} + h\right)\gamma_{Hg} \tag{1}$$

Also for the trapped gas: $p_1 V_1 = p_h V_h$

$$(14.7)(144)(3)\frac{\pi}{4}\frac{(.1)^2}{144} = p_h(3-h)\frac{\pi}{4}\frac{(.1)^2}{144} \tag{2}$$

$$\therefore \; p_h = \frac{(14.7)(144)(3)}{3-h}$$

Substitute into Eq. 1. $\frac{(14.7)(144)(3)}{3-h} = (14.7)(144) + \left(\frac{2}{12} + h\right)(13.6)(62.4)$

$$\frac{6350}{3-h} = 2{,}117 + \left(\frac{1}{6} + h\right)(848.6)$$

$$6{,}350 = (3-h)(2{,}117) + (3-h)(\frac{1}{6} + h)(848.6)$$

$$h = .895 \; ft$$



http://ingesolucionarios.blogspot.com Edu_Zegarr_ch

2.11

What is the pressure difference between points $A$ and $B$ in the tanks?

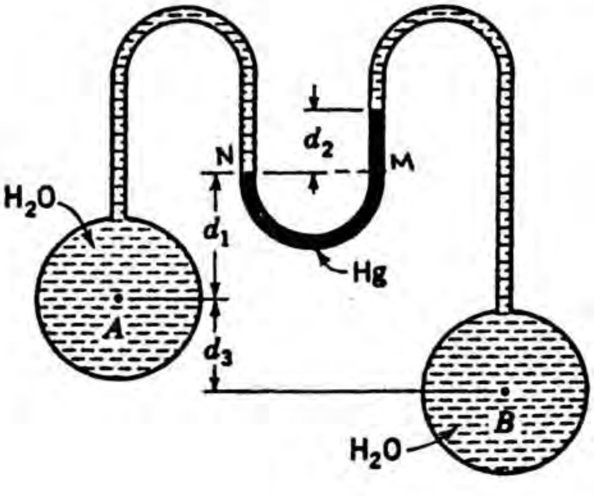


$$p_N = p_A - \gamma_{H_2O}\, d_1$$

$$p_M = p_B - (d_1+d_2+d_3)\gamma_{H_2O} + d_2\gamma_{Hg}$$

$$p_N = p_M$$

$$\therefore\ p_A - \gamma_{H_2O}\, d_1 = p_B - (d_1+d_2+d_3)\gamma_{H_2O} + d_2\gamma_{Hg}$$

$$\therefore\ p_B - p_A = \gamma_{H_2O}(d_2+d_3) - \gamma_{Hg} d_2$$

http://ingesolucionarios.blogspot.com

2.12

Calculate the difference in pressure between centers of tank $A$ and tank $B$. If the entire system is rotated 180° about the axis $MM$, what changes in pressure between the tanks would be necessary to maintain the positions of the fluids intact?

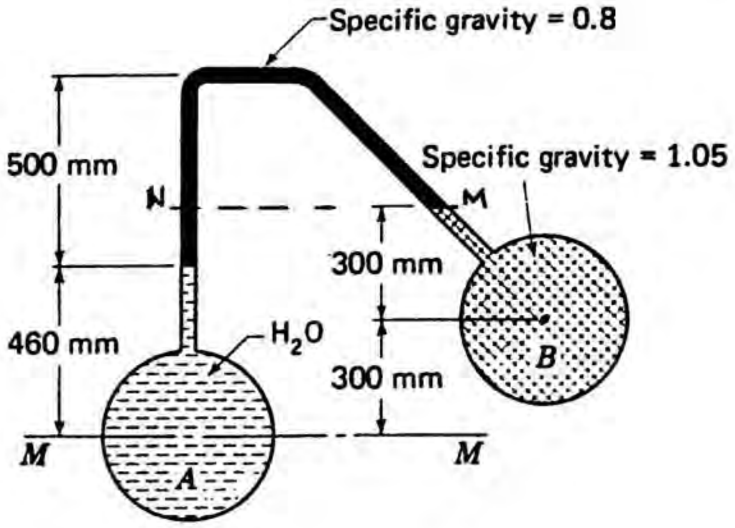


1) $$p_N = p_A - (9{,}806)(.46) - (9{,}806)(.8)(.14) \qquad (a)$$

$$p_{N'} = p_B - (.3)(9{,}806)(1.05) \qquad (b)$$

$$\therefore\ p_A - (9{,}806)(.46) - (9{,}806)(.8)(.14) = p_B - (.3)(9{,}806)(1.05)$$

$$p_A - p_B = \boxed{2{,}520\ Pa}$$

2) By rotating 180° about axis $M$–$M$ we change the signs in Eqs. (a) and (b) of the numerical quantities. We get

$$p_A - p_B = \boxed{-2{,}520\ Pa}$$


http://ingesolucionarios.blogspot.com Edu_Zegarr_ch

http://ingesolucionarios.blogspot.com

What is the pressure $p_A$? The specific gravity of the oil is 0.8.

2.13

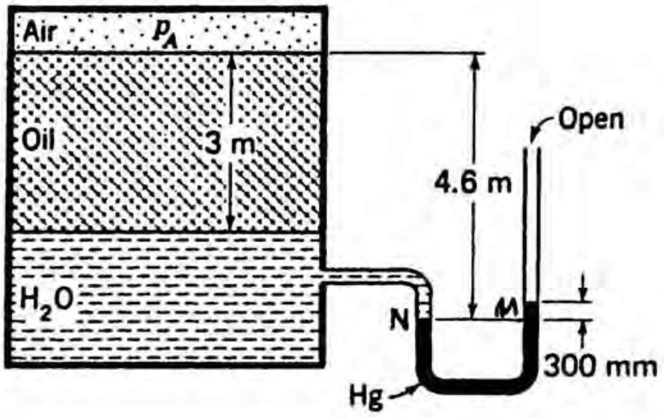


$$p_N = p_A + (.8)(9{,}806)(3) + (9{,}806)(4.6-3)$$

$$p_M = p_{atm} + (.3)(13.6)(9{,}806)$$

$$\therefore \; p_A + (.8)(9{,}806)(3) + (9{,}806)(1.6) = p_{atm} + (.3)(13.6)(9{,}806)$$

$$p_A = p_{atm} + 784\ Pa = \boxed{784\ Pa\ gauge}$$



http://ingesolucionarios.blogspot.com Edu_Zegarr_ch

What is the specific gravity of fluid $A$?

2.14

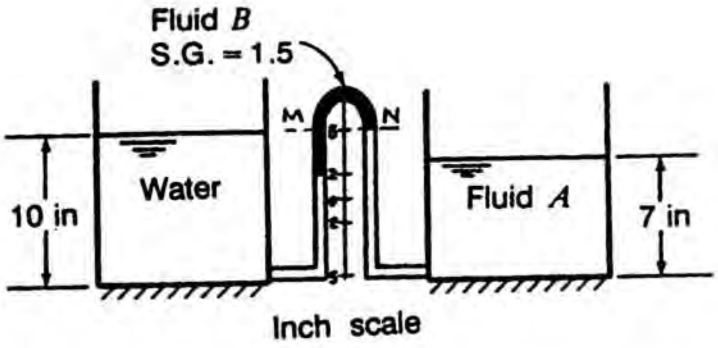


$$p_M = p_{atm} + (62.4)\left(\frac{10}{12}\right) - (62.4)\left(\frac{7}{12}\right) - (1.5)(62.4)\left(\frac{3}{12}\right)$$

$$p_N = p_{atm} + (62.4)(S)\left(\frac{7}{12}\right) - (62.4)(S)\left(\frac{10}{12}\right)$$

Since $M$ and $N$ are at **same depth** and joined by **same fluid,**

$$p_M = p_N$$

$$\therefore \quad p_{atm} + (62.4)\left(\frac{10}{12}\right) - (62.4)\left(\frac{7}{12}\right) - (1.5)(62.4)\left(\frac{3}{12}\right) = p_{atm} + (62.4)(S)\left(\frac{7}{12}\right) - (62.4)(S)\left(\frac{10}{12}\right)$$

$$\boxed{S = .500}$$

http://ingesolucionarios.blogspot.com

Find distance *d* for the U tube.

2.15

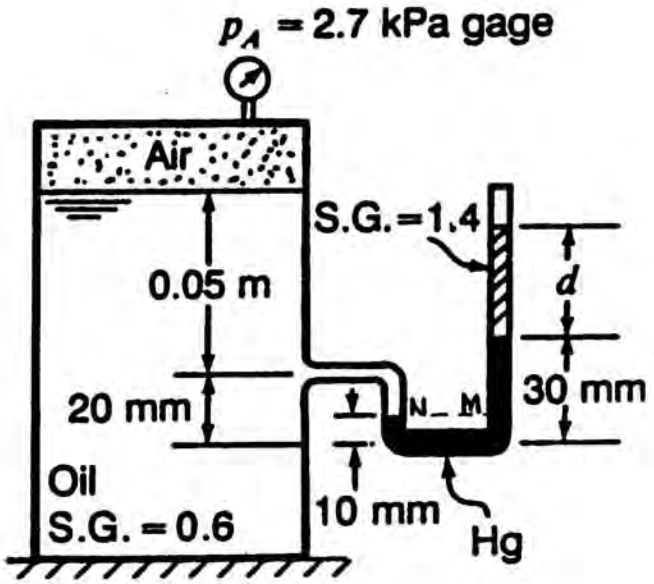


Use **gauge** pressures.

$$\begin{cases} p_N = 2{,}700 + (.6)(9{,}806)(.05+.01) \\ p_M = (1.4)(9{,}806)(d) + (.02)(13.6)(9{,}806) \end{cases}$$

$$p_N = p_M$$

$$\therefore \quad 2{,}700 + (.6)(9{,}806)(.06) = (1.4)(9{,}806)(d) + (.02)(13.6)(9{,}806)$$

$$d = .02810\ m = \boxed{28.1\ mn}$$



http://ingesolucionarios.blogspot.com Edu_Zegarr_ch

2.16

What is the absolute pressure in drum *A* at position *a*?

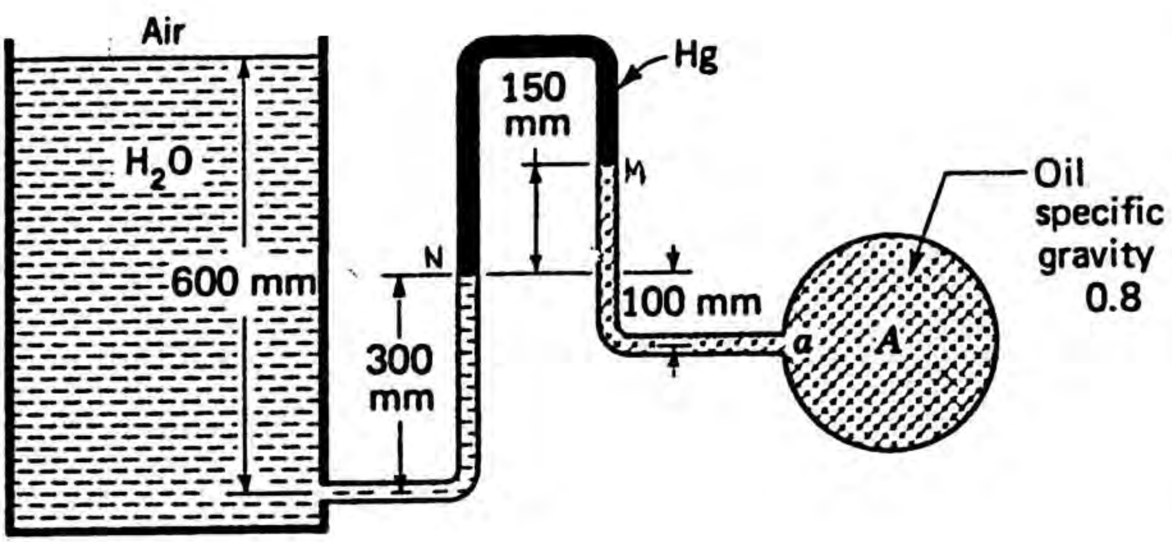


$$\begin{cases} p_N = p_{atm} + 9{,}806(.6-.3) - (9{,}806)(13.6)(.15) \\ p_M = p_A - (.8)(9{,}806)(.25) \end{cases}$$

$$\therefore \quad p_A = (.8)(9{,}806)(.25) + p_{atm} + (9{,}806)(.3) - (9{,}806)(13.6)(.15)$$

$$= p_{atm} - 15{,}101 \; Pa$$

$$= 101{,}325 - 15{,}101$$

$$= \boxed{86{,}224 \; Pa}$$

What is the gage pressure in the tank? The tank contains air.

2.17

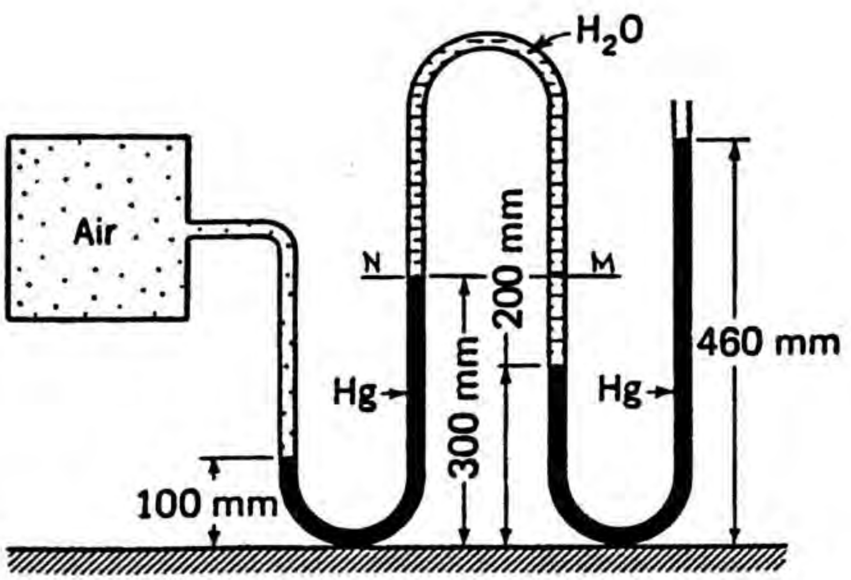


$$p_N = p_A - (13.6)(9{,}806)(.200)$$

$$p_M = p_{atm} + (13.6)(9{,}806)(.260) - (9{,}806)(.100)$$

$$\therefore \quad p_A = (13.6)(9{,}806)(.200) + (13.6)(9{,}806)(.200) - (9{,}806)(.100) + p_{atm}$$

$$= p_{atm} + 60{,}365 \; Pa$$

$$p_A = \; 60.37 \; k \; Pa \; gauge$$

http://ingesolucionarios.blogspot.com

2.18

When greater precision is required for a pressure measurement, we use a *micromanometer*. Two immiscible liquids having specific weights $\gamma_1$ and $\gamma_2$, respectively, are used in this system. We assume that the fluids in tanks $E$ and $B$ whose pressure difference we are measuring are gases with negligible specific weight. Compute the pressure difference $p_E - p_B$ in terms of $\delta$, $d$, $\gamma_1$, and $\gamma_2$. If the area of the micromanometer tube is $a$ and the cross-sectional areas of the containers $C$ and $D$ are $A$, determine $\delta$ in terms of $d$, by geometrical considerations. Explain how by having $a/A$ very small and $\gamma_1$ almost equal to $\gamma_2$, a small pressure difference $p_E - p_B$ will cause a large displacement $d$, thus making for a sensitive instrument.

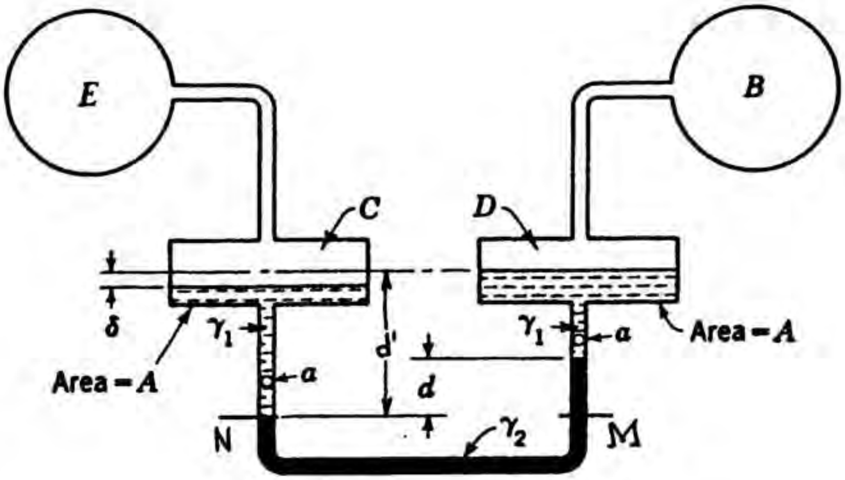


a) $$p_N = p_E + (d' - \delta)\gamma_1$$

$$p_M = p_B + (d' - d)\gamma_1 + d\gamma_2$$

But $$p_N = p_M$$

$$\therefore \quad p_E + (d' - \delta)\gamma_1 = p_B + (d' - d)\gamma_1 + d\gamma_2$$

$$p_E - p_B = \gamma_2 d - \gamma_1 d + \gamma_1 \delta = \gamma_2 d - \gamma_1 (d - \delta) \qquad (1)$$

b) $$\delta A = da \qquad \therefore \quad \delta = \frac{da}{A}$$

c) $$p_E - p_B = \gamma_2 d - \gamma_1 \left( d - d\,\frac{a}{A} \right) = \left( \gamma_2 - \gamma_1 + \gamma_1 \frac{a}{A} \right) d$$

If $a/A \ll 1$ neglect last term in bracket. Hence

$$\boxed{p_E - p_B \approx (\gamma_2 - \gamma_1) d}$$

Now if $\gamma_1 \approx \gamma_2$, then $d$ must be large for a given pressure difference $p_E - p_B$ making the instrument very sensitive.



http://ingesolucionarios.blogspot.com Edu_Zegarr_ch

http://ingesolucionarios.blogspot.com

2.19 From **hydrostatics** at datum

$$p_{atm} = p_{vap} + \gamma h$$

$$\therefore \quad h = \frac{(p_{atm} - p_{vap})}{\gamma}$$

A barometer is a device for measuring atmospheric pressure. If we use a liquid having specific weight $\gamma$ and invert a tube full of this material as shown, find formulas for $h$ if the absolute vapor pressure of the liquid is $p_{vap}$
(*a*) in SI units
(*b*) in USCS units using psi
Show dimensions in your formulas. If we use a fluid having a specific weight of 850 lb/ft$^3$ and a vapor pressure of 0.2 psi abs, find $h$.

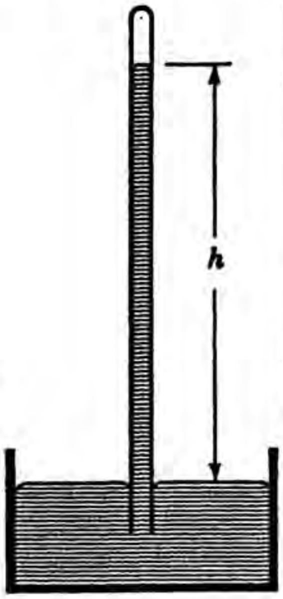


**For SI units:**

$$h(m) = \frac{[(p_{atm} - p_{vap})(P_a)]}{\gamma\left(\frac{N}{m^3}\right)}$$

**For USCS units:**

$$h(ft) = \frac{[(p_{atm} - p_{vap})(psi)](144\ in.^2/ft^2)}{\gamma\left(\frac{lb}{ft^3}\right)}$$

For data given:

$$h = \frac{[(14.7 - .2)(144)]}{850} = 2.46\ ft = 29.5\ in.$$

---

From the preceding problem the height $h$ in a barometer is

$$h = \frac{1}{\gamma}\left[p_{atm} - (p_{vap})\right](144)\ ft \qquad (a)$$

with the pressure given in psi. If a barometer registers 800 mm in a pressure chamber, and a pressure gage in this chamber measures 50 psi gage, what is the absolute pressure for this gage? Take the vapor pressure of mercury to be 0.3 psi abs. The value of $\gamma$ is 850 lb/ft$^3$.

2.20 For U.S.C.S. units:

$$h = (.800)\left(\frac{1}{.305}\right) = 2.62\ ft$$

Going to Eq. (a) and noting that the chamber pressure must replace $p_{atm}$, we have

$$p_{ch.} = \frac{(2.62)(850)}{144} + .3 = 15.77\ psi\ abs.$$

$$\therefore \quad p_{ch.} = 15.77 + 50 = 65.77\quad psi\ abs.$$

---

A barometer measures 750 mm in a chamber where a pressure gage measures 10,000 Pa gage on a device in the chamber. What is the absolute pressure for this gage? The vapor pressure of the mercury is 0.5 Pa abs. See Probs. 2.19 and 2.20. What conclusion can be drawn concerning the inclusion of vapor pressure of mercury in most problems?

2.21 From Eq. (a) of Problem 2.19

$$h = .750 = \frac{1}{(13.6)(9{,}806)}\left[p_{atm} - .5\right]$$

$$\therefore \quad 1.0002\times10^5 + .5 = p_{atm}$$



http://ingesolucionarios.blogspot.com Edu_Zegarr_ch

http://ingesolucionarios.blogspot.com

(cont.) The pressure on the gauge is then

$$p_{gauge} = 10{,}000 + 1.002\times10^5 + .5 = 1.100\times10^5 \ Pa \ abs.$$

We can usually neglect the vapor pressure of the mercury.

The Eiffel Tower in Paris is 984 ft tall with its base about 500 ft above sea level. What is the pressure and temperature at the top in a U.S. Standard Atmosphere? Do not use tables.

2.22 The height $z$ above sea level is

$$(984 + 500) = 1{,}484 \ ft$$

To get **temperature** go to Eq. (2.15).

$$T = [519 - (.00357)(1{,}484)] = 513.7^\circ R$$

$$\therefore \ T = 53.7^\circ F$$

To get **pressure**, go to Eq. (2.14).

$$p = p_1 \left[\frac{T_1}{T_1 + Kz}\right]^{\frac{g}{KR}}$$

$$\therefore \ p = 2{,}116.8\left[\frac{519}{519-(.00357)(1{,}484)}\right]^{\frac{g}{53.3g(-.00357)}}$$

$$p = 2{,}116.8[1.0103]^{-5.26} = 2{,}005.7 \ \frac{lb}{ft^2}$$

$$\therefore \ p = 13.93 \ psi$$

Outside a hot air balloon a barometer measures 690 mm mercury. What is the elevation of the balloon in a U.S. Standard Atmosphere? Do not use tables.

2.23 From hydrostatics

$$p = (13.6)(9{,}806)(.690) = 92{,}019 \ Pa$$

Go to Eq. (2.14). Assume temp. varies linearly.

$$p = 92{,}019 = 101{,}325\left(\frac{288}{288-.006507z}\right)^{\frac{9.81}{(-.006507)(287)}}$$

$$\therefore \ (.9082)^{-\frac{1}{5.259}} = \frac{288}{288-.006507z}$$



http://ingesolucionarios.blogspot.com Edu_Zegarr_ch

http://ingesolucionarios.blogspot.com

(cont.)

$$288 - .006507z = 282.8$$

$$\boxed{z = 804\ m}$$

2.24

In the U.S. Standard Atmosphere where the temperature varies according to Eq. (2.15), the equation relating pressure and specific volume is

$$pv^n = \text{const}$$

This is called a *polytropic process*. What should the value of $n$ be?

Use Eq. (2.14) as a start

$$\frac{p}{p_1} = \left(\frac{T_1}{T_1+Kz}\right)^{\frac{g}{KR}} = \left(\frac{T_1}{T}\right)^{\frac{9.81}{(-.006507)(287)}}$$

$$\frac{p}{p_1} = \left(\frac{T}{T_1}\right)^{5.253}$$

Next, replace $T$'s using Eq. of state.

$$\frac{p}{p_1} = \left(\frac{\frac{p\upsilon}{R}}{\frac{p_1\upsilon_1}{R}}\right)^{5.253}$$

$$\therefore \left(\frac{p}{p_1}\right)^{1-5.253} = \left(\frac{\upsilon}{\upsilon_1}\right)^{5.253}$$

$$\left(\frac{p_1}{p}\right)^{4.253} = \left(\frac{\upsilon}{\upsilon_1}\right)^{5.253}$$

$$\frac{p_1}{p} = \left(\frac{\upsilon}{\upsilon_1}\right)^{1.2351}$$

Hence, on rearranging we have:

$$p\upsilon^{1.2351} = const. \qquad \therefore \quad \boxed{n = 1.2351}$$

http://ingesolucionarios blogspot com

At what elevation in feet is the pressure in a standard atmosphere 0.92 that at sea level? Do this *without* tables. What is $v$ at this position? Use sea level data given in Sec. 2.4

2.25 Use Eq. 2.15 for temp. variation.

$$T = (519 - .00357z)^\circ R \qquad z \text{ in ft.}$$

$$\therefore \quad K = -.00357 \qquad (\textit{lapse rate})$$

Sea level data:

$$T_0 = 519^\circ R \qquad \rho_0 = .002378 \text{ slugs/ft}^3$$

Eq. of state:

$$p = \frac{1}{v} RT \quad ; \quad p_0 = \frac{1}{v_0} RT_0$$

$$\therefore \quad \frac{p}{p_0} = \frac{v_0}{v} \frac{T}{T_0}$$

Noting that $v_0 = \left(\frac{1}{\rho_0}\right)$ we have:

$$.92 = \left(\frac{1}{.002378}\right) \frac{1}{v} \frac{T}{519}$$

$$\therefore \quad \frac{T}{v} = 1.135 \qquad (1)$$

Also from Eq. (2.14) for **lin. temp. var.**

$$\frac{p}{p_0} = \left(\frac{T_0}{T + Kz}\right)^{\frac{g}{KR}}$$

$$\therefore \quad .92 = \left[\frac{519}{(519 - .00357z)}\right]^{\frac{32.2}{(-.00357)(53.3)(32.2)}}$$

$$\boxed{\therefore \quad z = 2{,}289 \text{ ft}}$$

From Eq. (2.15)



http://ingesolucionarios blogspot com Edu_Zegarr_ch

(cont.)

$$T = [519-(.00357)(2{,}289)] = 510.8°$$

Go to Eq. (1).

$$\upsilon = \frac{T}{1.135} = \frac{510.8}{1.135} = \boxed{450.1\ \frac{ft^3}{slug}}$$

$$\upsilon = \frac{450.1}{32.2} = \boxed{13.98\ \frac{ft^3}{lbm}}$$

2.26

In an *adiabatic atmosphere*, the pressure varies with the specific volume in the following manner:

$$p\upsilon^k = \text{const}$$

where $k$ is a constant equal to the ratio of the specific heats $c_p$ and $c_v$. Develop an expression for pressure as a function of elevation for this atmosphere, using the ground as a reference. When $z = 0$, take $p = p_0$ and $\gamma = \gamma_0$. Reach the following result:

$$p = \frac{1-k}{k}\gamma z + p_0\frac{\gamma}{\gamma_0}$$

$$p\upsilon^k = C_1$$

The basic equation from statics is: $\frac{dp}{dz} = -\gamma$

But $\gamma = \frac{1}{\upsilon}$. Hence $\frac{dp}{dz} = -\frac{1}{\upsilon}$ (2)

Solve for $\upsilon$ in Eq. (1). $\upsilon = \frac{C_1^{\frac{1}{k}}}{p^{\frac{1}{k}}}$

Subst. for $\upsilon$ in Eq. (2). $\frac{dp}{dz} = -\frac{p^{\frac{1}{k}}}{C_1^{\frac{1}{k}}}$ $\quad \frac{dp}{p^{\frac{1}{k}}} = -\frac{dz}{C_1^{\frac{1}{k}}}$

Integrating

$$\frac{p^{-\frac{1}{k}+1}}{-\frac{1}{k}+1} = -\frac{1}{C_1^{1/k}}z + C_2$$

When $z = 0$ , $p = p_o$

$$\therefore\ C_2 = \frac{p_o^{-\frac{1}{k}+1}}{-\frac{1}{k}+1}$$

http://ingesolucionarios.blogspot.com

(cont.)

Hence:
$$\frac{p^{\frac{k-1}{k}}}{\frac{k-1}{k}} = -\frac{1}{C_1^{\frac{1}{k}}}z + \frac{p_o^{\frac{k-1}{k}}}{\frac{k-1}{k}}$$

But $C_1 = p_o v_o^k = p_o \frac{1}{\gamma_o^k}$

$$\therefore \quad \frac{p^{\frac{k-1}{k}}}{\frac{k-1}{k}} = -\frac{\gamma_o}{p_o^{\frac{1}{k}}}z + \frac{p_o^{\frac{k-1}{k}}}{\frac{k-1}{k}}$$

Multiply left side of Eq. by $\frac{p^{\frac{1}{k}}}{\gamma}$ and right side by $\frac{p_o^{\frac{1}{k}}}{\gamma_o}$. Note they both equal $C_1^{\frac{1}{k}}$.

$$\frac{p}{\frac{k-1}{k}\gamma} = -z + \frac{p_o}{\frac{k-1}{k}\gamma_o}$$

$$\frac{kp}{(k-1)\gamma} = -z + \frac{kp_o}{(k-1)\gamma_o}$$

$$\boxed{p = \frac{1-k}{k}\gamma z + p_o\frac{\gamma}{\gamma_o}}$$



http://ingesolucionarios.blogspot.com Edu_Zegarr_ch

http://ingesolucionarios.blogspot.com

2.27

An atmosphere has a temperature of 27°C at sea level and drops 0.56°C for every 152.5 m. If the gas constant is 287 N · m/(kgXK), what is the elevation above sea level where the pressure is 70 percent that of sea level?

This is an atmosphere with a linear temperature variation. Hence

$$T = T_o + Kz$$

When $z = 0$ , $T = 273 + 27 = 300K$ $\therefore$ $T_o = 300K$

Also $$\frac{dT}{dz} = K = -\frac{.56}{152.5}$$

Hence $$T = 300 - \frac{z}{272.3}$$

From Eq. (2.14), we have

$$p = p_o\left[\frac{T_o}{T_o+Kz}\right]^{\frac{g}{KR}}$$

$$\frac{p}{p_o} = .70 = \left[\frac{300}{300-\frac{z}{272.3}}\right]^{-\frac{9.81}{287/272.3}} = \left[\frac{300}{300-\frac{z}{272.3}}\right]^{-9.308}$$

$$\left[\frac{300-\left(\frac{z}{272.3}\right)}{300}\right] = (.70)^{\frac{1}{9.308}}$$

$$\boxed{z = 3{,}071\ m}$$



http://ingesolucionarios.blogspot.com Edu_Zegarr_ch

http://ingesolucionarios.blogspot.com

2.28

In Example 2.1 assume that the atmosphere is *isothermal* and compute the elevation for a pressure which is 30 percent that at sea level.

$$p = p_1 e^{-\frac{\gamma_1}{p_1}(z-z_1)}$$

a) To get $\gamma_1$, we use the equation of state

$$p_1 = \frac{\gamma_1}{g} RT_1$$

$$\gamma_1 = \frac{gp_1}{RT_1} = \frac{gp_1}{(220)(228)} = 1.548\times10^{-4}\, p_1$$

Hence: $$p = p_1 e^{-\frac{1.548\times10^{-4} p_1}{p_1}(z-z_1)}$$

At $p/p_1 = .30$ we want $z$ . $\quad .30 = e^{-(1.548\times10^{-4})(z-0)}$

Take ln of both sides. $\quad -1.204 = -1.548\times10^{-4}(z-0)$

$$\boxed{z = 7{,}778\ m}$$

2.29

Work Example 2.4 for the case of the atmosphere being incompressible.

Use Eq. of state: $\quad p\upsilon = RT$

$$\therefore\ \gamma = \frac{gp_1}{RT_1} = \frac{gp_1}{(220)(228)} = 1.548\times10^{-4}\, p_1$$

$$\frac{dp}{dz} = -1.548\times10^{-4}\, p_1$$

$$\therefore\ p - p_1 = (-1.548\times10^{-4}\, p_1)(z-0)$$

Divide by $p_1$: $\quad \frac{p}{p_1} = 1 - 1.548\times10^{-4}\, z$

Let $\frac{p}{p_1} = .30$ $\quad .30 - 1 = -1.548\times10^{-4}\, z$

$$\boxed{z = 4{,}522\ m}$$



http://ingesolucionarios.blogspot.com Edu_Zegarr_ch

2.30

The wind has been considered as a possible useful source of energy. How much kinetic energy would be present in a U.S. Standard Atmosphere between the elevations of 5000 ft and 6000 ft above sea level if there is an average wind speed of 5 mi/h? Use an average density. The radius of the earth is 3960 mi. What is the kinetic energy per unit volume of air? Comment on the practical use of wind power. Area of a sphere is $\pi D^2$.

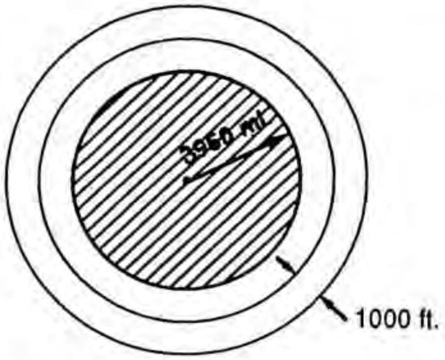


Use $\rho = (.8488)(.002378) = .002018\ \dfrac{slugs}{ft^3}$

$$KE = \iiint \frac{\rho V^2}{2}\, d\upsilon = \frac{(.002018)\left[(5)\left(\frac{5280}{3600}\right)\right]^2}{2}(\pi)(4)(3{,}960)(5{,}280)^2(1{,}000)$$

$$KE = 2.98\times10^{17}\ ft\text{-}lb$$

$$\frac{KE}{unit\ volume} = \frac{(.002018)\left[(5)\left(\frac{5{,}280}{3{,}600}\right)\right]^2}{2} = 5.43\times10^{-2}\ ft\text{-}lb/ft^3$$

The total energy is very large but it is very diffuse and hence hard to use economically.

2.31

A light rubber balloon containing helium is released in a U.S. Standard Atmosphere. The stretched rubber transmits a membrane force $\sigma$ proportional to the diameter and given as $5D$ lb/ft with $D$ given in feet. What is the inside pressure in the balloon at an elevation of 5000 ft in a U.S. Standard Atmosphere? The balloon is rising slowly at a constant speed. *Hint:* The force on a curved surface from a uniform pressure equals the pressure times the projected area of the surface onto a plane normal to the direction of the force.

Take a free body of half of the balloon. For **equilibrium**

$$-(p_i - p_o)\frac{\pi D^2}{4} + \sigma(\pi D) = 0$$

But $\sigma = 5D$. Hence: $-(p_i - p_o)\left(\dfrac{D^2}{4}\right) + 5D^2 = 0$

$$\therefore\ p_i - p_o = 20\ psf$$

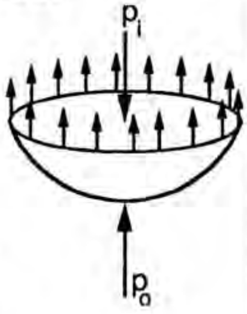


$p_i = p_o + 20 = 1{,}761 + 20 =$ **1,781 psf**

http://ingesolucionarios.blogspot.com

2.32

Pressure to be maintained is $p_o = (1{,}455)(.8) = 1{,}164 \ psf$

Hence for highest altitude of flight: $\dfrac{p_{amb}}{p_o} \leq .6$

$$\therefore \ p_{amb} \leq (.6)(1{,}164) = 698.4 \ psf$$

The highest elevation of flight is

$$\boxed{h_{max} = 27{,}340 \ ft}$$

In a light airplane the cabin pressure is to be maintained at 80 percent that of atmospheric pressure on the ground which is 10,000 ft above sea level. If for structural reasons the outside-to-inside ambient pressure ratio is not to get smaller than 0.6, what is the maximum height $h_{max}$ that the plane may fly in a U.S. Standard Atmosphere?

2.33

A force of 445 N is exerted on lever *AB*. End *B* is connected to a piston which fits into a cylinder having a diameter of 50 mm. What force *P* must be exerted on the larger piston to prevent it from moving in its cylinder which has a 250 mm diameter?

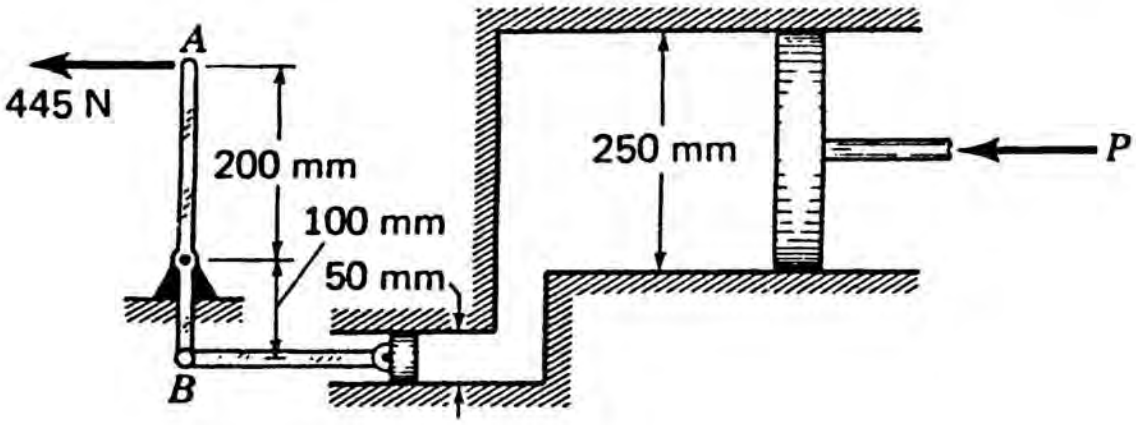


$$A_1 = \pi r_1^2 = (\pi)(.025)^2 \qquad A_2 = \pi r_2^2 = (\pi)(.125)^2$$

$$\frac{p_2}{p_1} = \frac{A_2}{A_1}$$

$$\therefore \ p_2 = [(2)(445)]\frac{\pi(.125)^2}{\pi(.025)^2} = 22{,}250 \ N = \boxed{22.25 \ kN}$$



http://ingesolucionarios.blogspot.com Edu_Zegarr_ch

http://ingesolucionarios.blogspot.com

Prove that the resultant force from a uniform pressure distribution on an area acts at the centroid of the area.

2.34

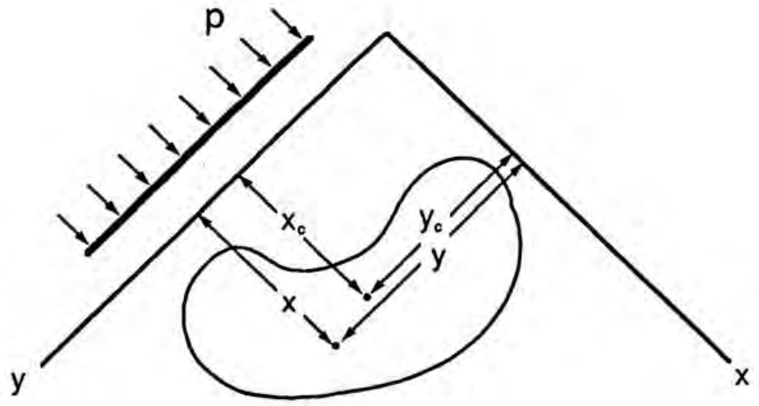


The resultant force is: $(p)(A)$ . Taking moments about the $x$ axis we get:

$$(pA)(y') = \int py\, dA = p \int y\, dA$$

$$\therefore \quad y' = \frac{\int y\, dA}{A} = \frac{y_c A}{A} = y_c$$

Similarly we show by taking moments about the $y$ axis that $\quad x' = x_c$

Hence, resultant force acts at the centroid.



http://ingesolucionarios.blogspot.com Edu_Zegarr_ch

Find total force on door *AB* and the moment of this force about the bottom of the door.

2.35

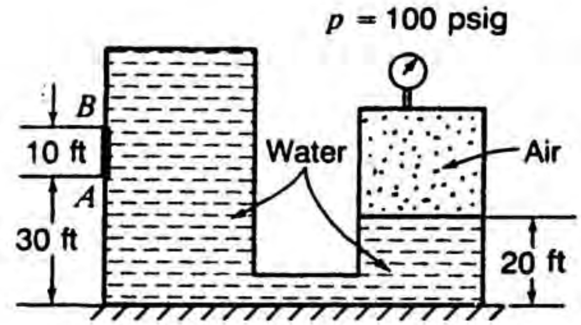


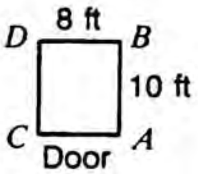


Find $p_c$ .

$$p_c = (100)(144) - (62.4)(35-20) = 13{,}464 \ psf$$

$$\therefore \quad F = (13{,}464)(80) = \boxed{1.077\times10^6 \ lb}$$

<u>Center of pressure</u>:

$$y'-y_c = \frac{\gamma \sin\theta \, I_{\xi\xi}}{p_c A} = \frac{(62.4)(1)\left(\frac{1}{12}\right)(8)(10^3)}{(13{,}464)(80)}$$

$$y'-y_c = \boxed{.03862 \ ft}$$

<u>Moment about base</u>:

$$M = (1.077\times10^6)(5-.03862) = \boxed{5.343\times10^6 \ ft\text{-}lb}$$



http://ingesolucionarios.blogspot.com Edu_Zegarr_ch

http://ingesolucionarios.blogspot.com

2.36 **On ABCD:**

$$F_1 = (9{,}806)(1.1)[(2.2)(2) - \pi r^2]$$

**On CDE:**

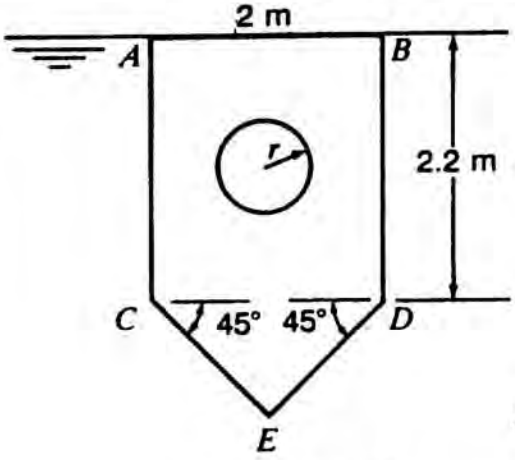


$$F_2 = (9{,}806)[2.2 + \frac{1}{3}(1)]\left(\frac{1}{2}\right)(2)(1)$$

$$(9{,}806)(1.1)[4.4 - \pi r^2] = (9{,}806)(2.533)(1)$$

$$\boxed{r = .8171\ m}$$

$$F_1 = F_2 = (9{,}806)(2.533)(1) = 2.484\times10^4\ N$$

**For ABCD:**

$$y' - y_c = \frac{\gamma \sin\theta\, I_{\xi\xi}}{A p_c} = \frac{(9{,}806)(1)\left[\left(\frac{1}{12}\right)(2)(2.2)^3 - \frac{1}{4}(\pi)(.8171)^4\right]}{[(2)(2.2) - (\pi)(.8171)^2](9{,}806)(1.1)} = .5626\ m$$

A plate is submerged vertically into the water. What is the radius $r$ of a hole to be cut from the center of $ABCD$ to make the hydrostatic force on surface $ABCD$ equal to the hydrostatic force on surface $CDE$? What is the moment of the total force about $AB$? Delete $p_{atm}$.

$$\therefore\ M_1 = (2.484\times10^4)(1.1 + .5626) = 4.130\times10^4\ N\text{-}m$$

**For CDE:**

$$y' - y_c = \frac{\dfrac{(9{,}806)(1)(2)(1^3)}{36}}{\left(\frac{1}{2}\right)(2)(1)(9{,}806)\left(2.2 + \frac{1}{3}\right)} = .02193\ m$$

$$\therefore\ M_L = (2.484\times10^4)\left(2.2 + \frac{1}{3} + .02193\right) = 6.347\times10^4\ N\text{-}m$$

**Total Moment:**

$$M_{AB} = 4.130\times10^4 + 6.347\times10^4 = \boxed{1.048\times10^5\ N\text{-}m}$$



http://ingesolucionarios.blogspot.com Edu_Zegarr_ch

http://ingesolucionarios.blogspot.com

2.37

A rectangular plate shown as *ABC* can rotate about hinge *B*. What length *l* should *BC* be so that there is zero torque about *B* from water and plate weight? Take the weight as 1000 N/m of length. The width is 1 m.

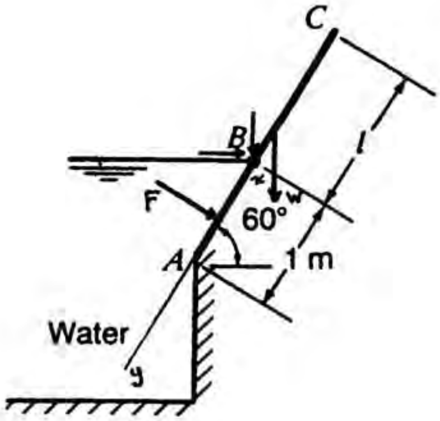


a) Compute **moment from water** about $B$ .

$$F = (9{,}806)\left(\frac{1}{2}\right)(\sin 60°)(1\times 1) = 4246\ N$$

$$y'-y_c = \frac{\left(\frac{1}{12}\right)(1)(1^3)}{(1)\left(\frac{1}{2}\right)} = .1667\ m$$

$$M_B = (4246)\left(\frac{1}{2} + .1667\right) = 2{,}831\ N$$

b) Compute **moment from weight:**

$$M_L' = (\ell+1)(1{,}000)\left(\frac{\ell+1}{2} - 1\right)\cos 60° = 500(\ell+1)\left(\frac{\ell-1}{2}\right) = (250)(\ell^2-1)$$

Set $M_B = M_B'$

$$2{,}831 = (250)(\ell^2-1)$$

$\boxed{\ell = 3.51\ m}$



http://ingesolucionarios.blogspot.com Edu_Zegarr_ch

http://ingesolucionarios.blogspot.com

2.38

Find the total force on door $AB$ from fluids. Take $S_{oil} = 0.6$. Find the position of this force from the bottom of the door.

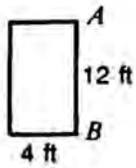


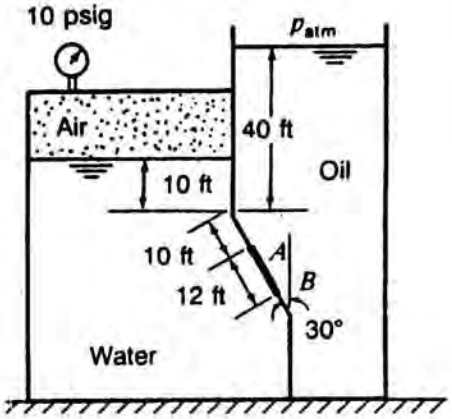


Left Side. Use gauge pressures.

$$p_c = (10)(144) + (62.4)[10+(16)(.866)] = 2,929\ psf$$

$$F_1 = (2,929)(4)(12) = 1.406\times10^5\ lb$$

$$y'-y_c = \frac{\gamma \sin\theta\, I_{zz}}{Ap_c} = \frac{(62.4)(\sin120°)\left(\frac{1}{12}\right)(4)(12^3)}{(2,929)(48)} = .2214\ ft$$

Right Side.

$$p_c = (.6)(62.4)[40+(16)(.866)] = 2,016\ psf$$

$$F_2 = (2,016)(48) = .9679\times10^5\ lb$$

$$y'-y_c = \frac{(62.4)(.6)(\sin120°)\left(\frac{1}{12}\right)(4)(12^3)}{(2,016)(48)} = .1930\ ft$$

$$Total\ Force = 1.406\times10^5 - .9679\times10^5 = \boxed{4.381\times10^4\ lb}$$

Take moments about B.

$$(F_{TOTAL})(d) = -(1.406\times10^5)(6-.2214) + (.9679\times10^5)(6-.1930)$$

$$\therefore\ d = \boxed{5.716\ ft\ \text{ from B}}$$



http://ingesolucionarios.blogspot.com Edu_Zegarr_ch

2.39 Find the resultant force on the top of the submerged surface. Give the complete position of the resultant.

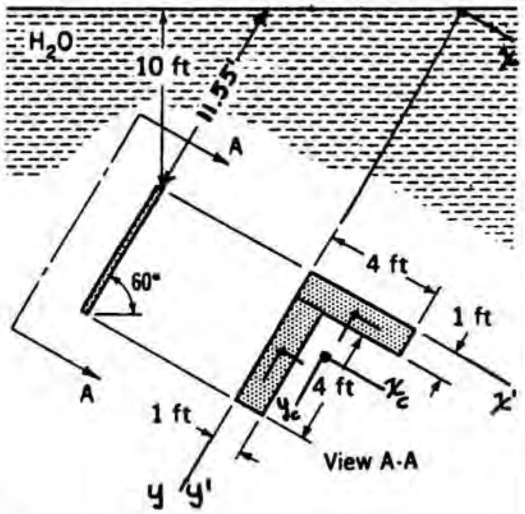


a) Locate **centroid** using coordinates shown.

$$x_c = \frac{(4)(1)\left(\frac{1}{2}\right) + (4)(1)(2)}{8} = 1.250\ ft$$

$$y_c = \frac{(4)(1)\left(\frac{1}{2}\right) + (4)(1)(3)}{8} = 1.750\ ft$$

b) **Resultant Force** $F_R = \gamma d_c A = (62.4)[10+(1.750)(.866)](8) = 5{,}750\ lb$

c) **Center of Pressure** $y' - \overline{y_c} = \dfrac{\gamma \sin\theta\, I_{\xi\xi}}{p_c A}$

where $\overline{y_c}$ is measured from the free surface

$$y' - \overline{y_c} = \frac{(62.4)(\sin 60°)}{(718.6)(8)}\left[\left(\frac{1}{12}\right)(4)(1^3) + (4)(1.750 - \left(\frac{1}{2}\right)^2 + \left(\frac{1}{12}\right)(1)(4^3) + (4)(3-1.750)^2\right] =$$

$$\boxed{= .1707\ ft}$$

$$x' - x_c = \frac{\gamma \sin\theta\, I_{\xi\eta}}{p_c A} = \frac{(62.4)(\sin 60°)}{(718.6)(8)}\ [0+(4)(2-1.250)(.5-1.750)$$

$$+ 0 + (4)((.5-1.250)(3-1.750)]$$

$$\boxed{= -.0705\ ft}$$



http://ingesolucionarios.blogspot.com Edu_Zegarr_ch

http://ingesolucionarios.blogspot.com

2.40

An open rectangular tank is partially filled with water. The dimensions are shown.
(*a*) Determine the force on the bottom of the tank from the water.
(*b*) Determine the force on the end of the tank from water. Give position also.
(*c*) Determine the force on the door shown at the side of the tank. Be sure to state position.

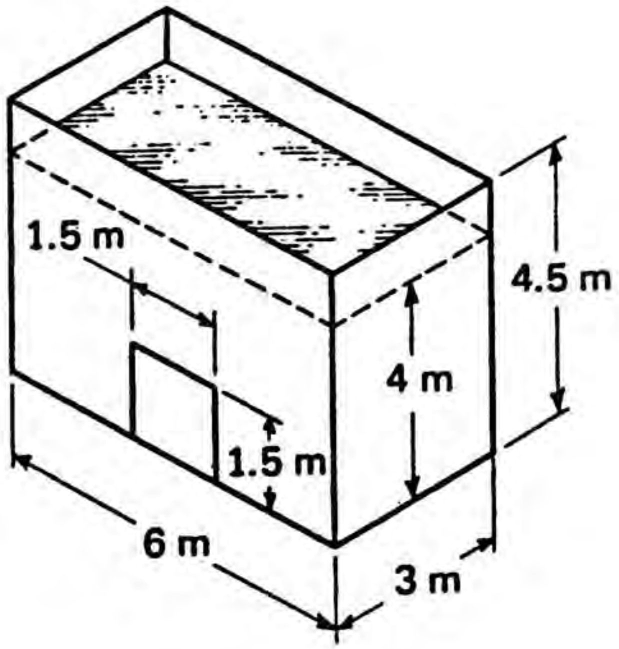


a) $F_1 = [(4)(9{,}806)](3)(6) = 706\ kN$

b) $F_2 = [(2)(9{,}806)](4)(3) = 235\ kN$

$$y' = y_c + \frac{\gamma \sin\theta}{p_c A} I_{\xi\xi} = 2 + \frac{(9{,}806)(1)\left(\frac{1}{12}\right)(3)(4)^3}{(9{,}806)(2)(12)} = 2.67\ m$$

Center of pressure is 2.67 *m* below surface at centerline of wall.

c) $F_3 = \left(4 - \frac{1.5}{2}\right)(9{,}806)(1.5)(1.5) = 71.7\ kN$

$$y' = y_c + \frac{\gamma \sin\theta}{p_c A} I_{\xi\xi} = 3.25 + \frac{(9{,}806)(1)\left(\frac{1}{12}\right)(1.5)(1.5)^3}{(9{,}806)(3.25)(1.5)^2} = 3.31\ m$$

The center of pressure of the door is 3.31 *m* below the surface of the water at the centerline of the door.



http://ingesolucionarios.blogspot.com Edu_Zegarr_ch

http://ingesolucionarios.blogspot.com

2.41

A gate $AB$ is hinged at $A$. When closed, it is inclined at an angle of 60°. It is rectangular and has a length of 0.6 m and a width of 1 m. There is water on both sides of the gate. Furthermore, compressed air exerts a pressure of 20 kPa gage on the surface of the water on the left side of the gate, while the water on the right side is exposed to atmospheric pressure. What is the moment about the hinge $A$ exerted by the water on the gate? *Hint:* With a little thought, you can greatly shorten the solution to the problem.

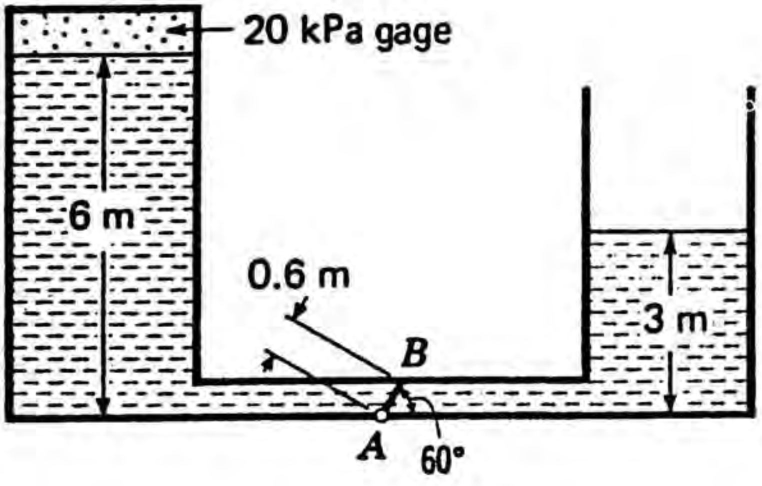


We can shorten this problem drastically if we note that $3m$ of water on both sides of the door cancel their effects. This leaves uniform pressure on the left side of the door stemming from the $20\ kPa$ pressure and $3m$ of water.

$$P = [(20)(1{,}000)+(3)(9{,}806)](.6)(1) = 29.65\ kN$$

$$M = (29.65)(.3) = 8.895\ kN\text{-}m$$

2.42

In Prob. 2.41, a 1.2-m layer of oil, having specific gravity of 0.8, is added to the top of the water on the right side of the gate. What is the total moment about $A$ from the water on the gate? Hint of Prob. 2.41 applies here.

Note that the $3m$ of water on each side of the gauge cancel each others affects. This leaves a uniform pressure from $20\ kPa$ of air pressure and $3m$ on one side and a uniform pressure from the $1.2\ m$ of oil on the other side. The net pressure from both sides is then:

$$p_{net} = [(20)(1{,}000)+(3)(9{,}806)]-[(9{,}806)(.8)(1.2)] = 40{,}000\ Pa$$

$$\therefore\ M = (40{,}000)(.3)(.6)(1) = 7{,}200\ N\text{-}m$$



http://ingesolucionarios.blogspot.com Edu_Zegarr_ch

http://ingesolucionarios.blogspot.com

2.43

Find the resultant force from all fluids acting on the door. Specific gravity of the oil is 0.8.

Consider the door as two portions (1) and (2).

a) For lower portion:

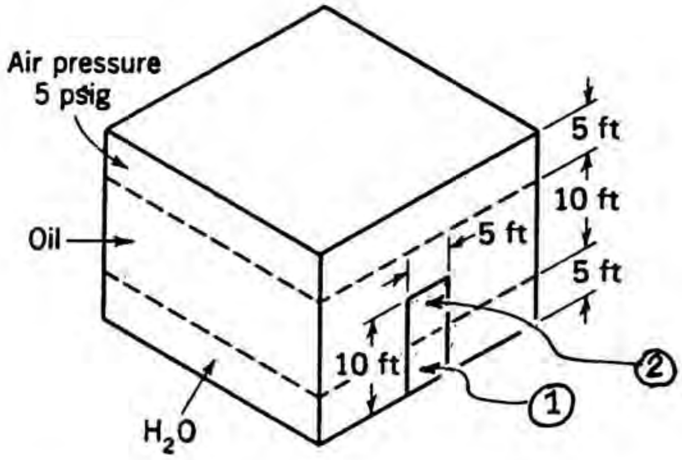


$$F_1 = [(5)(144)+(62.4)(.8)(10)+(62.4)(2.5)](25) = 34{,}380\ lbs$$

Also
$$y' - (y_c)_1 = \frac{(62.4)(1)\left(\frac{1}{12}\right)(5)(5)^3}{(1{,}375.2)(25)} = .0945\ ft$$

b) For upper portion (2):

$$F_2 = [(5)(144)+(62.4)(.8)(7.5)]\,25 = 27{,}360\ lbs$$

$$y_2' - (y_c)_2 = \frac{(.8)(62.4)(1)\left(\frac{1}{12}\right)(5)(5^3)}{(1{,}094)(25)} = .0951\ ft$$

The **total force** is then: $F = F_1 + F_2 = 61{,}740\ lb$

Taking moments about the top of door:

$$61{,}740y' = (34{,}380)(7.5+.0945) + (27{,}360)(2.5+.0951)$$

$$y' = 5.38\ ft$$

The force is $61.74\times10^3\ lb$ acting at $5.38\ ft$ from top of the door.



http://ingesolucionarios.blogspot.com Edu_Zegarr_ch

http://ingesolucionarios.blogspot.com

2.44

**Determine the force and its position from fluids acting on the door in Fig. P 2.44.**

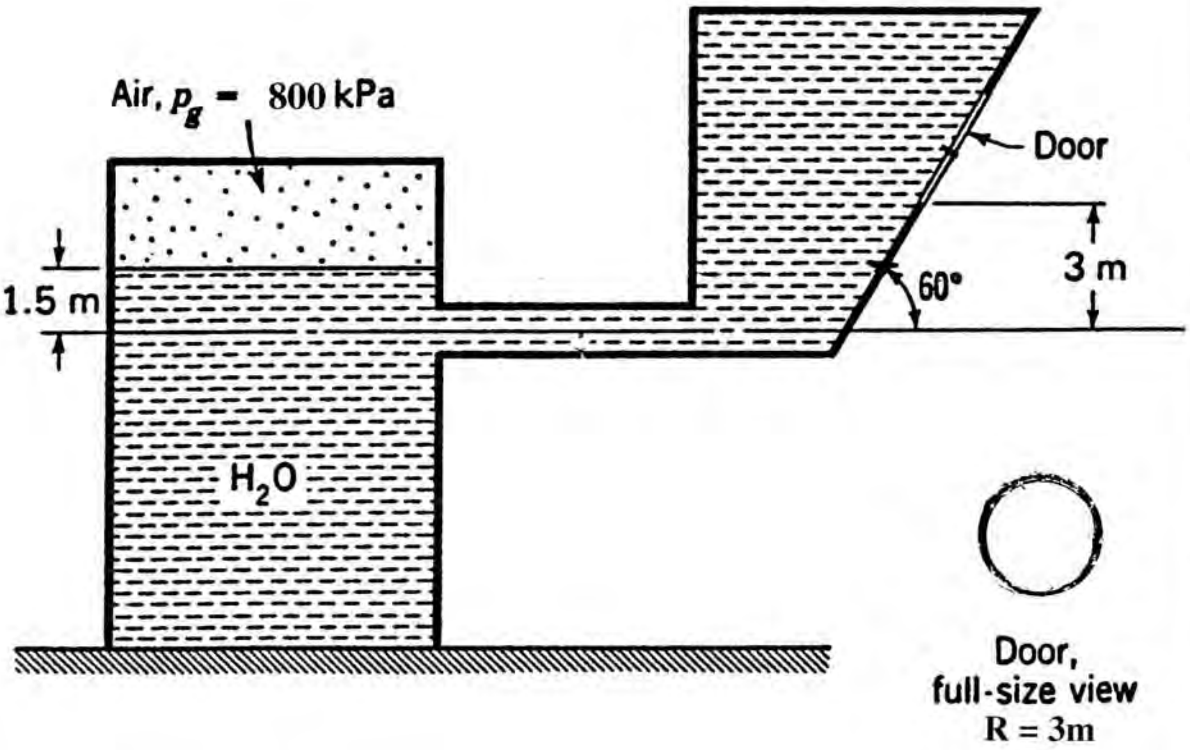


$$F = \left[800{,}000 + \left(-1.5 - 1.5\sin 60^\circ\right)\right](9806)\left[(\pi)\left(3^2\right)\right] = 2.187 \times 10^7 \ \text{N}$$

$$F = 2.18 \times 10^6 \ \text{N}$$

$$y' - y_c = \frac{\gamma \sin\theta I_{\xi\xi}}{p_c A} = \frac{(9806)(.866)(1/4)(\pi)\left(r^4\right)}{\left(7.726 \times 10^5\right)(\pi)\left(r^2\right)}$$

$$\boxed{y' - y_c = .00247 \ \text{m}}$$



http://ingesolucionarios.blogspot.com Edu_Zegarr_ch

http://ingesolucionarios.blogspot.com

2.45

At what height $h$ will the water cause the door to rotate clockwise? The door is 3 m wide. Neglect friction and the weight of the door.

$$F = \frac{h}{2}(9{,}806)\left[(3)\left(\frac{h}{.866}\right)\right] = 16{,}985\ h^2\ N = 16.985\ h^2\ kN$$

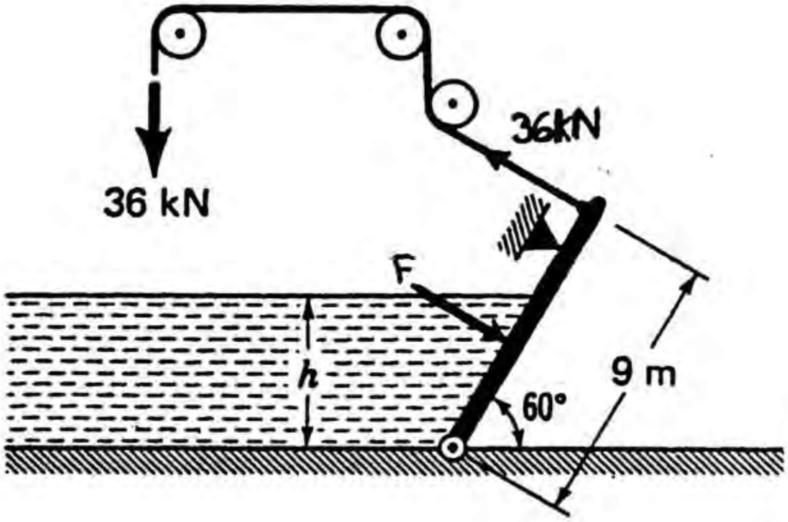


$$y' = y_c + \frac{\gamma \sin\theta\, I_{\xi\xi}}{p_c A} = \frac{h}{(2)(.866)} + \frac{(9{,}806)(.866)\left(\frac{1}{12}\right)(3)\left(\frac{h}{.866}\right)^3}{(4{,}903h)(3)\left(\frac{h}{.866}\right)}$$

$$y' = .770\ h$$

$\underline{\Sigma M_A = 0}$

$$(36)(9) - (16.985)(h^2)\left(\frac{h}{.866} - .77\ h\right) = 0$$

$$h^3 = 49.58$$

$$\boxed{h = 3.67\ m}$$



http://ingesolucionarios.blogspot.com Edu_Zegarr_ch

http://ingesolucionarios.blogspot.com

2.46

Find $F_R$ on door $AB$ from inside and outside fluids. Give distance $d$ below $B$ for the position of $F_R$.

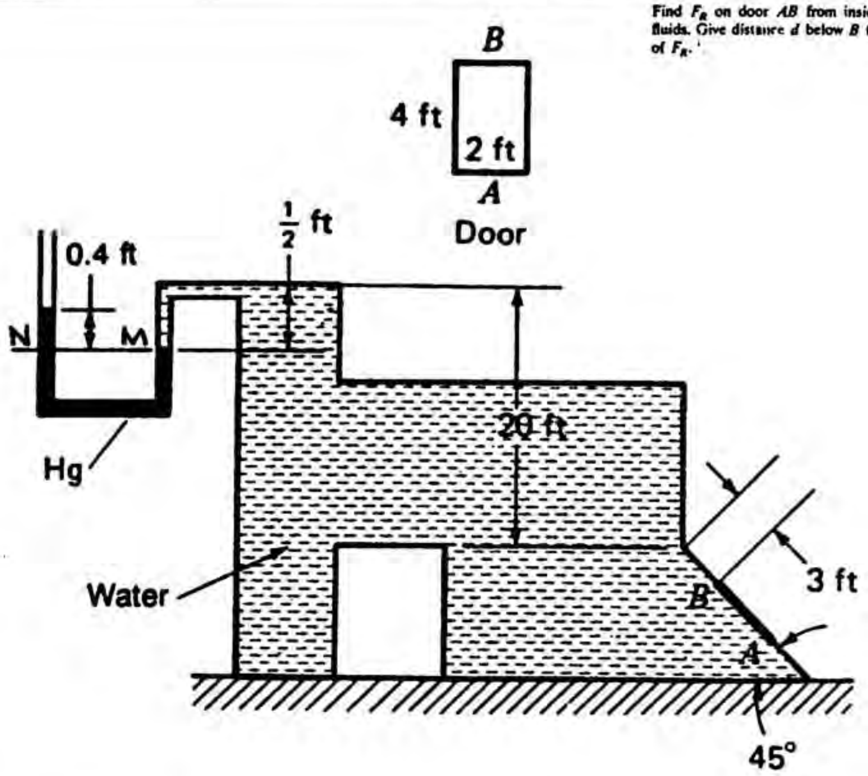


Use gauge pressures. Consider $U$ tube for pressure $p_a$ at top of water. We have

$$p_A + (62.4)\left(\frac{1}{2}\right) = (13.6)(62.4)(.4) \qquad p_A = 308\ psfg$$

$$\therefore\ F_R = \{(62.4)[20+(3+2)(.707)]+(308)\}(8) = 14{,}213\ lb$$

$$(y'-y_c) = \frac{\gamma \sin\theta\, I_{\xi\xi}}{p_c A} = \frac{(62.4)(.707)\left(\frac{1}{12}\right)(2)(4)^3}{(1{,}776.6)(2)(4)}$$

$$y'-y_c = .0331\ ft$$

$$\therefore\ \boxed{d = 2.0331\ ft}$$



http://ingesolucionarios.blogspot.com Edu_Zegarr_ch

2.47

At what pressure in the air tank will the square piston be in equilibrium if one neglects friction and leakage?

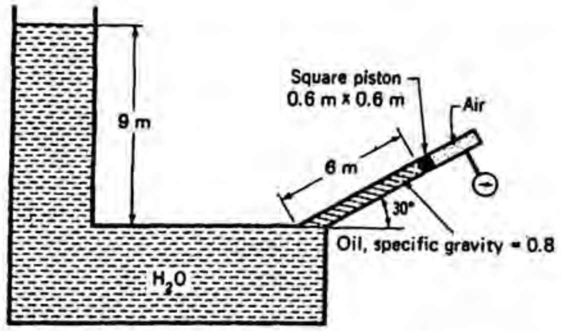


$$p = (9{,}806)(9) - [(6)(\sin 30°)-(.3)(\sin 60°)](9{,}806)(.8) = 66{,}758\ Pa$$

$$\therefore\ p = 66.76\ kPa\ gauge$$

2.48 Find pressure variation. $\gamma \propto p^{\frac{1}{2}}$ $\therefore\ \gamma = cp^{\frac{1}{2}}$

When $p = p_{atm}$ , $\gamma = \gamma_o$ . Hence

Imagine a liquid which when stationary stratifies in such a way that the specific weight is proportional to the square root of the pressure. At the free surface the specific weight is known and has the value $\gamma_0$. What is the pressure as a function of depth from the free surface? What is the resultant force on one face $AB$ of a rectangular plate submerged in the liquid? The width of the plate is $b$.

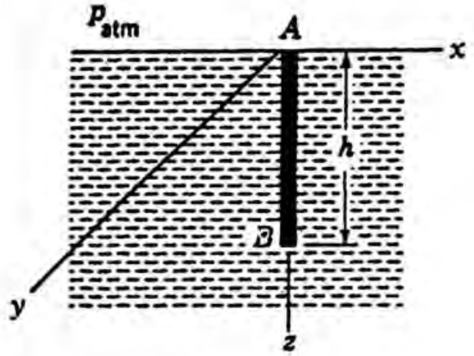


$$\gamma_o = cp_{atm}^{\frac{1}{2}} \qquad \therefore\ c = \frac{\gamma_o}{p_{atm}^{\frac{1}{2}}}$$

$\therefore$ Employing the basic differential equation we get $z$ pointing downward.

$$\frac{dp}{dz} = \gamma_o \frac{p^{\frac{1}{2}}}{p_{atm}^{\frac{1}{2}}}$$

Separate variables and integrate.

(cont.)

$$\int_{p_{atm}}^{p} \frac{dp}{p^{\frac{1}{2}}} = \int_{0}^{z} \frac{\gamma_o}{p_{atm}^{\frac{1}{2}}}\, dz$$

$$\therefore \quad 2\left(p^{\frac{1}{2}} - p_{atm}^{\frac{1}{2}}\right) = \frac{\gamma_o}{p_{atm}^{\frac{1}{2}}}\, z$$

Solving for $p$ we get:
$$p = \left(\frac{1}{2}\,\frac{\gamma_o}{p_{atm}^{\frac{1}{2}}}\, z + p_{atm}^{\frac{1}{2}}\right)^2$$

b) **Find resultant force:**

$$F = \int_o^h p(b\,dz) = \left(\frac{1}{4}\right)\left(\frac{\gamma_o^2 b}{p_{atm}}\right)\int_o^h z^2 dz + \gamma_o b \int_o^h z\,dz + p_{atm} b \int_o^h dz$$

$$= \frac{\gamma_o^2 b h^3}{12 p_{atm}} + \frac{\gamma_o b h^2}{2} + p_{atm} b h = b\left(\frac{\gamma_o^2 h^3}{12 p_{atm}} + \frac{\gamma_o h^2}{2} + p_{atm} h\right)$$

http://ingesolucionarios.blogspot.com

2.49

A trough of unit length contains water. A solid of identical shape is directly touching the free surface. It is moved directly downward a distance $\delta$ relative to the ground. What is the force on door $AB$ of unit width as a function of $\delta$? What happens when $\delta \to 1$ m? Consider only the gravitational force from water. *Hint:* What is the area of a parallelogram?

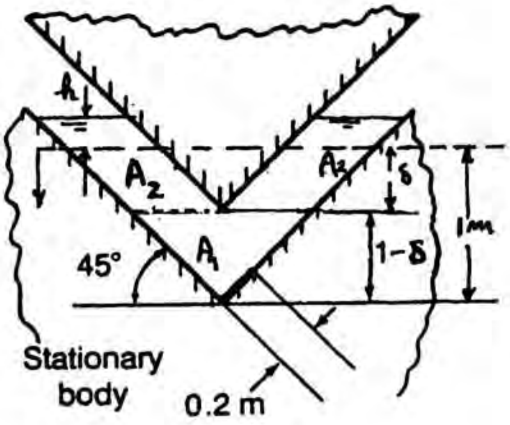


Use **conservation of volume** of water for a unit length of the trough.

$$\therefore \quad V_{INITIAL} = V_{\delta}$$

$$\frac{1}{2}(2)(1)(1) = \overbrace{\frac{1}{2}(2)(1-\delta)(1-\delta)(1)}^{A_1} + \overbrace{(2)(1-\delta)(h+\delta)(1)}^{A_2}$$

$$\therefore \quad 1 = (1-2\delta+\delta^2) + 2[h+\delta-\delta h-\delta^2]$$

$$0 = -\delta^2 + 2h - 2\delta h$$

$$\therefore \quad \delta^2 = 2h(1-\delta)$$

$$h = \frac{\delta^2}{2(1-\delta)} \qquad (1)$$

<u>Force on door:</u>

$$F = [(1+h)-(.2)\left(\frac{1}{2}\right)\sin 45°](9{,}806)(.2)(1)$$

$$\boxed{F = \left[.9293 + \frac{\delta^2}{2(1-\delta)}\right](1{,}961)\ N}$$



http://ingesolucionarios.blogspot.com Edu_Zegarr_ch

http://ingesolucionarios.blogspot.com

2.50

In Fig. 2.50 is shown a pipe system in which flows a liquid. Find the force vector from the atmospheric pressure of 101.325 Pa on the *outside* surface of the pipe system.

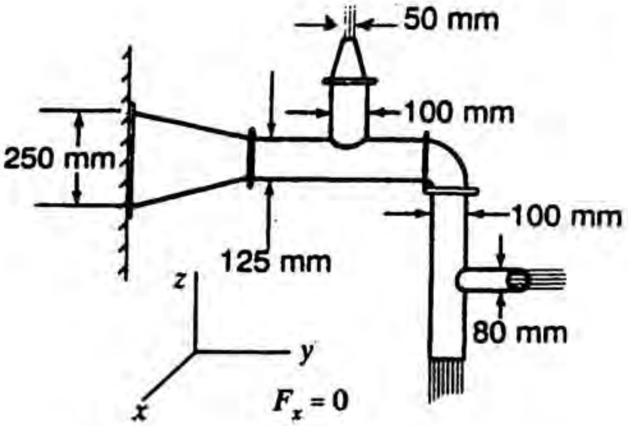


$$F_y = \left[-\frac{\pi}{4}(.250)^2 + \frac{\pi}{4}(.080)^2\right](101{,}325) = -4{,}464\ N$$

$$F_z = \left[-\frac{\pi}{4}(.100)^2 + \frac{\pi}{4}(.050)^2\right](101{,}325) = -596.85\ N$$

$$\vec{F} = -4{,}464\hat{j} - 596.9\hat{k}\ N$$

2.51

What are the horizontal and vertical forces from atmospheric pressure on the outside surface of the elbow disregarding the effects of atmosphere on flanges.

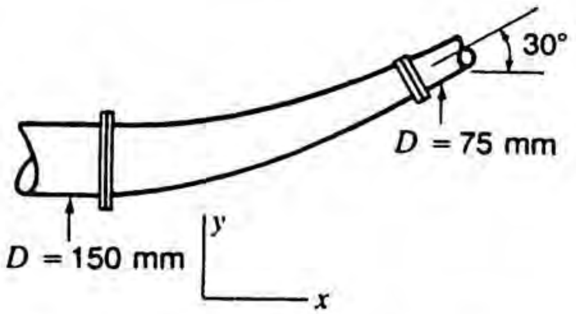


Horizontal Force: Project surface in x-direction.

$$F_x = -(p_{atm})\frac{\pi}{4}(.150)^2 + p_{atm}\frac{\pi}{4}(.075)^2(\cos 30°)$$

$$= 101{,}325\left(\frac{\pi}{4}\right)[-.150^2+(.075^2)(.866)] = -1{,}403\ N$$

Vertical Force: Project surface in y-direction.

$$F_y = (101{,}325)\left(\frac{\pi}{4}\right)(.075)^2\sin 30° = 223.8\ N$$



http://ingesolucionarios.blogspot.com
Edu_Zegarr_ch

http://ingesolucionarios.blogspot.com

2.52

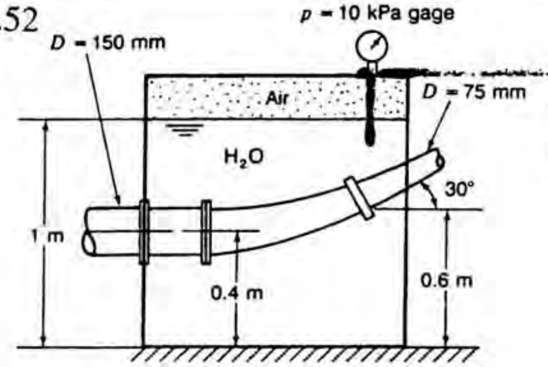


A thin-walled reducing elbow of Prob. 3.51 is shown in Fig. P3.52 inside a pressure tank. Find the horizontal force on the outside surface of the reducing elbow. Neglect pressure of flanges.

$$F_x = -[(10{,}000+101{,}325) + (.6)(9{,}806)]\left(\frac{\pi}{4}\right)(.150)^2$$

$$+ [(10{,}000+101{,}325) + (.4)(9{,}806)]\ \frac{\pi}{4}\ (.075)^2(\cos 30°)$$

$$\boxed{F_x = -1{,}630.3\ N}$$

3.53

$$dF_z = -\int_{z'}^{z_0} \gamma\, dz\, dA_z = -\int_{z'}^{z_0} \gamma\ d\upsilon$$

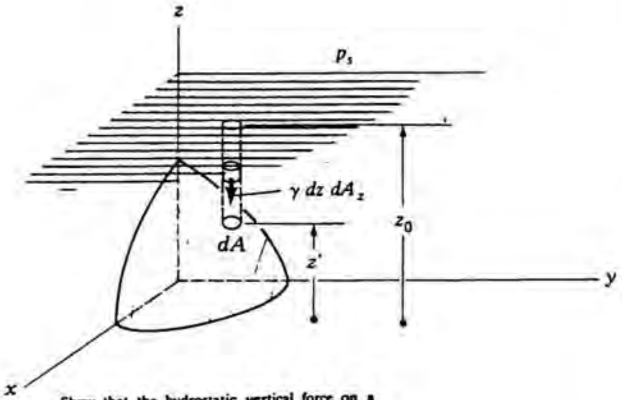


Show that the hydrostatic vertical force on a curved submerged surface acts at the center of gravity of the column of liquid above the curved surface and extends to the free surface. *Hint:* Start with Fig. 3.21 and replace $dz\,dA_z$ by $d\upsilon$. Use $V$ as the volume of the prismatic column.

**$\underline{\Sigma M_x}$**

$$-y dF_z = -\int_{z'}^{z_0} \gamma y\, dz\, dA_z = -\int_V \gamma y d\upsilon$$

$$\bar{y}F_z = \gamma \int_V y d\upsilon$$

$$\therefore\quad \bar{y}\int_V \gamma d\upsilon = \gamma \int_V y d\upsilon$$

$$\bar{y} = \frac{\int_V y d\upsilon}{V}$$

Also

$$\bar{x} = \frac{\int_V x d\upsilon}{V}$$

$\therefore$ $\bar{x}\,\bar{y}$ are coordinates of the centroid which for constant $\gamma$ is also the center of gravity. Hence the force of the column above a curved survace acts at the center of gravity of this prismatic column.



http://ingesolucionarios.blogspot.com Edu_Zegarr_ch

http://ingesolucionarios.blogspot.com

Determine the magnitude of the resultant force acting on the spherical surface and explain why the line of action goes through the center $O$.

2.54

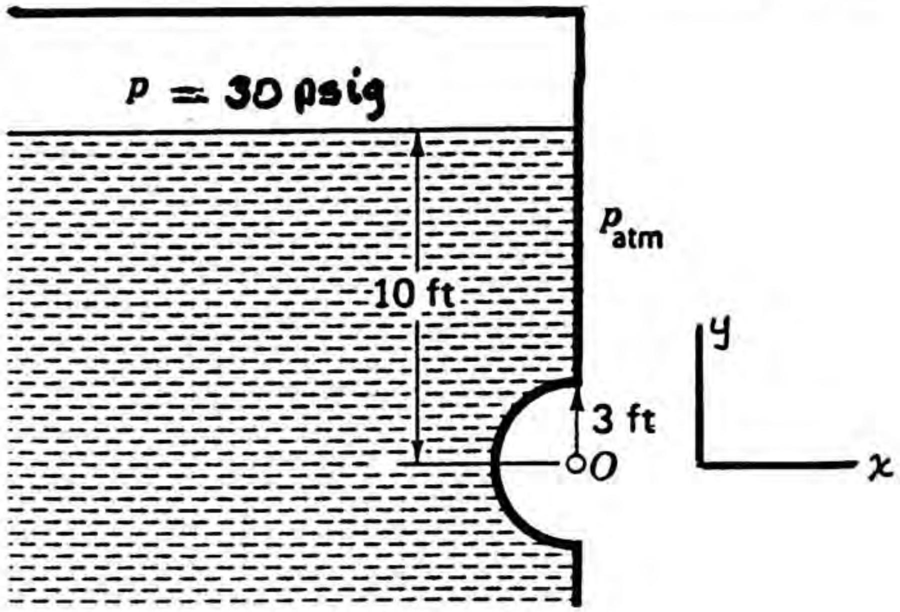


$$= (\gamma_{H_2O})(10)(\pi)(9) + (30)(\pi)(9)(144) = 1.398 \times 10^5$$

$$F_y = \frac{1}{2}\left(\frac{4}{3}\pi 3^3\right)(62.4) + (30)\left(\frac{1}{2}\right)(\pi)(9)(144) = 6.460 \times 10^4$$

$$\vec{F} = 1.398 \times 10^5 \hat{i} + 6.460 \times 10^4 \hat{j} \text{ lb}$$

Force goes through $O$ since the pressure is normal to the sphere at all points and hence points to $O$.



http://ingesolucionarios.blogspot.com Edu_Zegarr_ch

http://ingesolucionarios.blogspot.com

2.55

What is the resultant force from fluids acting on the door *AB* which is a quarter circle? The width of the door is 1.3 m.

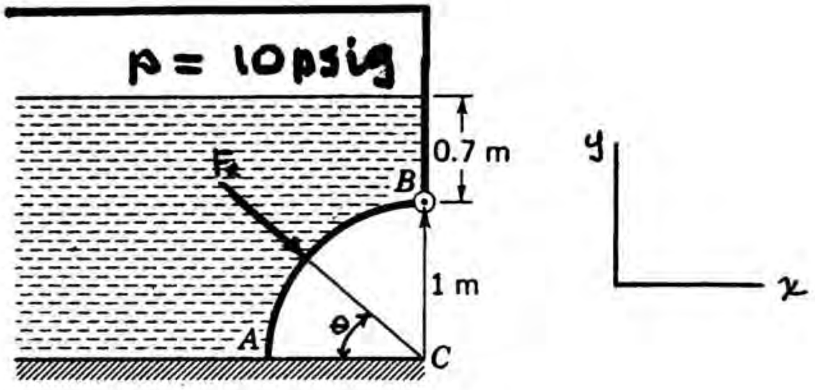


$$F_x = p_c A_x = (9{,}806)\left(.7 + \frac{1}{2}\right)(1)(1.3) \qquad (10)(6.895)(1)(1.3) = 104.93 \text{ kN}$$

$$F_y = (1)(1.3)(1.7)(9806) - \frac{1}{4}(\pi)(1^2)(1.3)(9806)) + (10)(6.895)(1.3)(1)$$

$$F_y = 101.38 \text{ kN}$$

$$F_R = \sqrt{104.93^2 + 101.38^2} = 145.9 \text{ kN}$$



http://ingesolucionarios.blogspot.com Edu_Zegarr_ch

http://ingesolucionarios.blogspot.com

2.56

What is the horizontal force on the semi-spherical door *AB* from all fluids inside and out? The specific gravity of oil is 0.8.

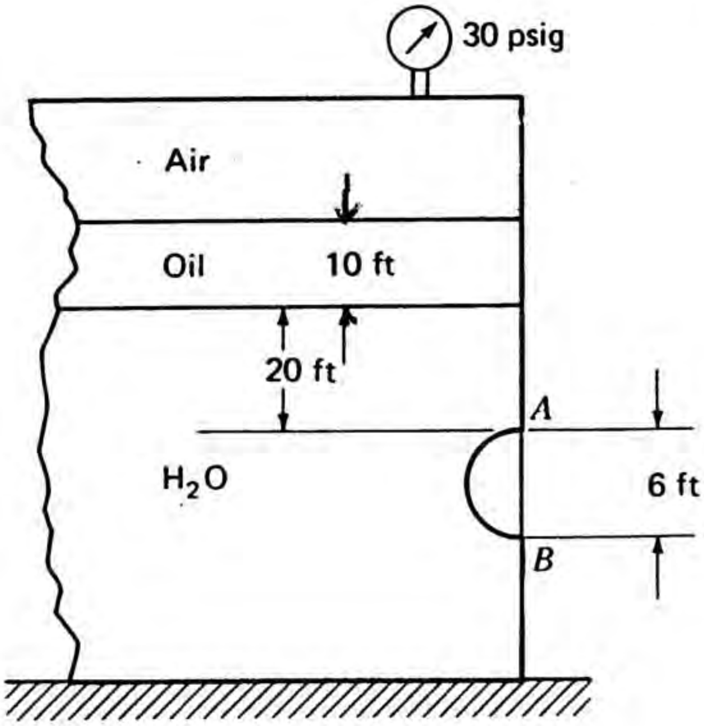


$$p_c = (30)(144) + (.8)(62.4)(10) + (62.4)(23) = 6{,}254 \ psfg$$

$$F = (6{,}254)\left(\frac{\pi 6^2}{4}\right) = \boxed{176{,}828 \ lb}$$



http://ingesolucionarios.blogspot.com Edu_Zegarr_ch

http://ingesolucionarios.blogspot.com

Find the horizontal force from the fluids acting on the plug.

2.57

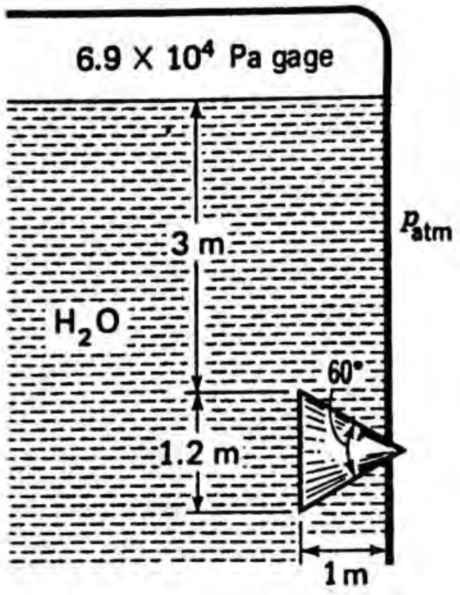


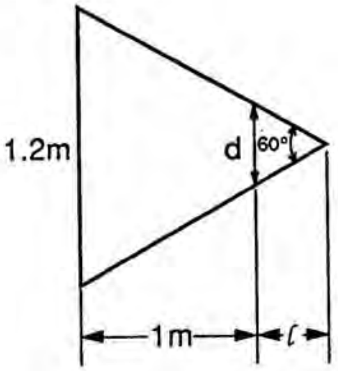


**Geometrical Considerations**

$$\tan 30° = \frac{\frac{1.2}{2}}{1+\ell} = .577$$

$$\ell = \frac{1.2}{(2)(.577)} - 1 = .0399$$

$$\therefore \quad \frac{d}{1.2} = \frac{.0399}{1.0399} \qquad d = .0460\ m$$

**Component $F_H$ :**

$$A_H = \frac{\pi d^2}{4} = \frac{(\pi)(.0460)^2}{4} = .001662\ m^2$$

$$F_H = [6.9\times10^4 + (3.6)(9{,}806)](.001662) = \boxed{173.3\ N}$$



http://ingesolucionarios.blogspot.com Edu_Zegarr_ch

http://ingesolucionarios.blogspot.com

2.58

A parabolic gate *AB* is hinged at *A* and latched at *B*. If the gate is 10 ft wide, determine the force components on the gate from the water.

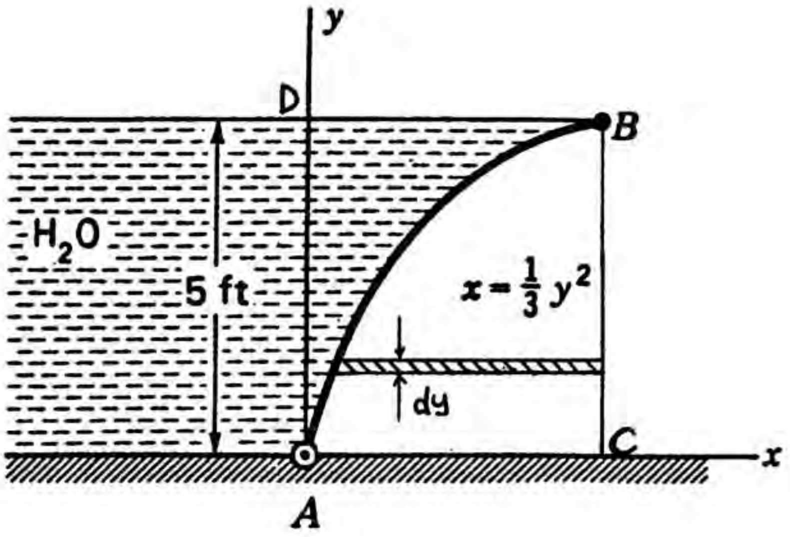


a) **Compute $F_x$ :** $F_x = (62.4)(2.5)(10)(5) = 7{,}800\ lb$

b) **Compute $F_y$ :**

$$ABC = \int_0^5 (AC - x)dy = \int_0^5 \left(\frac{25}{3} - \frac{y^2}{3}\right)dy$$

$$= \frac{1}{3}\left[(25)(5) - \frac{5^3}{3}\right] = 27.8\ ft^2$$

Hence:

$$F_y = (ABDC - 27.8)(10)(62.4) = \left[(5)\left(\frac{25}{3}\right) - 27.8\right]62.4 = 8{,}653\ lb$$

Hence we have:

$$\vec{F} = 7{,}800\hat{i} - 8{,}653\hat{j}\ lb$$



http://ingesolucionarios.blogspot.com Edu_Zegarr_ch

2.59

Consider a wall 10 ft wide and having corrugations (semicircular shapes). What are the resultant horizontal and vertical forces on the wall from the air and water? Give the result per unit width of the wall and for *n* corrugations.

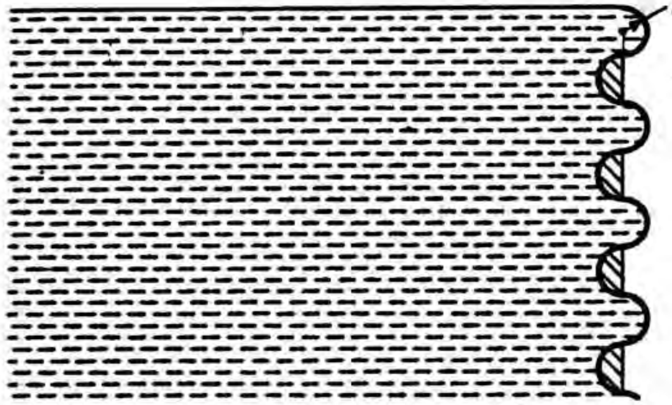


a) **Horizontal Component**

$$F_H = \frac{(62.4)(n)\left(\frac{4}{12}\right)}{2}\left(n\ \frac{4}{12}\right) = 3.47\ n^2$$

b) **Vertical Component**

Each outward semi-circle of the wall supports a force equal to the water inside the semi-circle region while every inward semi-circle of the wall is supported by a force of the very same value. Thus if $n$ is **even**:

$$F_V = 0$$

If $n$ is **odd** then: $$F_V = -(62.4)\ \frac{\pi\left(\frac{2}{12}\right)^2}{2}\ (1)$$

$\therefore\ F_V = 2.72\ lb/ft$ of wall downward.

2.60

A cylindrical control weir is shown. It has a diameter of 3 m and a length of 6 m. Give the magnitude and direction of the resultant force acting on the weir from the fluids.

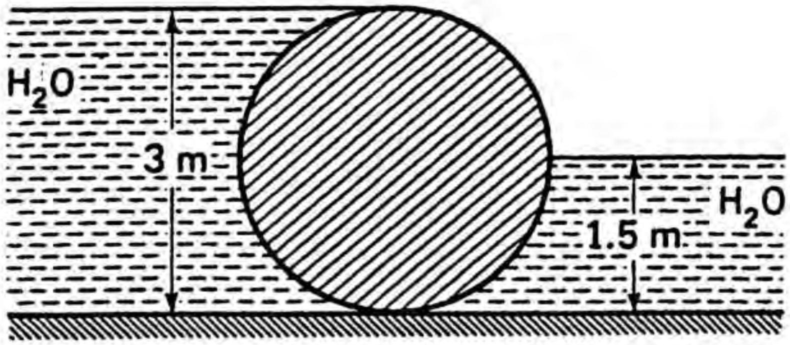


$$(F_x)_1 = (9{,}806)(1.5)(3)(6) = 264.8 \ kN$$

$$(F_x)_2 = -(9{,}806)(.75)(1.5)(6) = -66.2 \ kN$$

$$\therefore \quad (F_x)_{net} = 198.6 \ kN$$

$$(F_y)_1 = \left(\frac{1}{2}\right)(\pi)(1.5)^2(6)(9{,}806) = 207.9 \ kN$$

$$(F_y)_2 = \left(\frac{1}{4}\right)(\pi)(1.5)^2(6)(9{,}806) = 104.0 \ kN$$

$$\therefore \quad \vec{F} = [(F_x)_1 + (F_x)_2]\,\hat{i} + [(F_y)_1 + (F_y)_2]\,\hat{j} = 198.6\,\hat{i} + 312\,\hat{j} \ \ kN$$

$$\theta = \tan^{-1}\frac{312}{198.6} = 57.5°$$

2.61

What is the force on the conical stopper from the water?

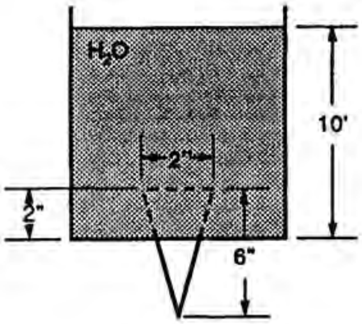


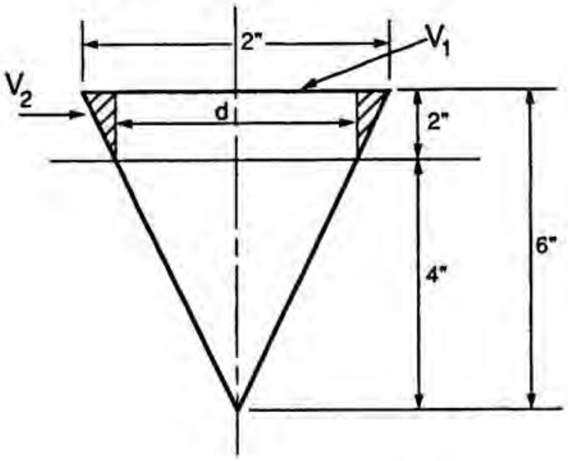


$$\frac{2''}{6''} = \frac{d}{4''} \qquad \therefore \; d = \frac{8}{6} = \frac{4''}{3}$$

The force $F_1$ from the water on the top surface of $V_1$ having diameter $d = \frac{4''}{3}$ is:

$$F_1 = (62.4)\left(10 - \frac{2}{12}\right)\left(\frac{\pi\left(\frac{4}{3}\right)^2}{\frac{4}{144}}\right) = (62.4)(9.83)(.0097) = 5.95\ lb$$

$F_1$ points downward.

An upward force $F_2$ from the water is exerted on the surface of $V_2$. It equals the weight of the fluid displaced by the triangular ring of the cone whose cross-section is shown. We compute the volume of the ring by subtracting the volume of the inside cylinder of height $2''$ from truncated cone in water.

http://ingesolucionarios.blogspot.com

(cont.)

$$V_{cone} = \left(\frac{1}{3}\right)(\pi)(1^2)(6) = 6.28\ in^3$$

$$V_{truncated\ cone} = 6.28 - \left(\frac{1}{3}\right)(\pi)\frac{\left(\frac{4}{3}\right)^2}{4}(4) = 6.28 - 1.86 = 4.42\ in^3$$

$$V_2 = 4.42 - \frac{\pi\left(\frac{4}{3}\right)^2}{4}(2) = 4.42 - 2.79 = 1.627$$

$$\therefore\ F_2 = \left(\frac{1.627}{1,728}\right)(62.4) = .0588\ lb$$

The total force is then:

$$F_1 - F_2 = 5.95 - .0588 = 5.89\ lb$$

**The water exerts a 5.89 *lb* force downward.**



http://ingesolucionarios.blogspot.com Edu_Zegarr_ch

http://ingesolucionarios.blogspot.com

2.62

What is the vertical force on the sphere if both sections of the tank are completely sealed from each other?

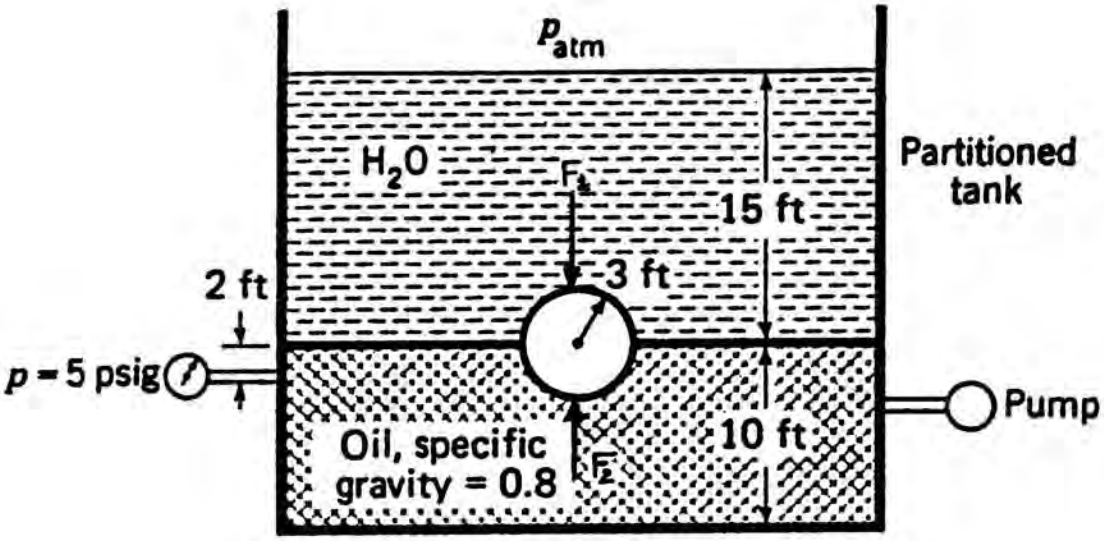


a) Compute $F_1$ .

$$F_1 = (62.4)\left[(15)(\pi)(9) - \left(\frac{1}{2}\right)\left(\frac{4}{3}\right)(\pi)(27)\right] = (62.4)(424-56) = 22{,}960\ lb$$

b) Compute $F_2$ .

The pressure at the top surface of the oil is:

$$p = (5)(144) - (.8)(62.4)(2) = 720 - 100 = 620\ psf$$

The hypothetical height of oil above semi-sphere is:

$$h = \frac{620}{(.8)(62.4)} = 12.42\ ft$$

$$F_2 = (.8)(62.4)\left[(\pi)(9)(12.42) + \left(\frac{1}{2}\right)\left(\frac{4}{3}\right)(\pi)(27)\right] = 20{,}353\ lb$$

∴ Net force is 2,607 *lb* downward.

**NOTE: Students will try to use Archimedes principle and give the sum of all weights of all displaced oil and water. This is incorrect since the oil and water are not freely in contact as is required by the Archimedes principle.**



http://ingesolucionarios.blogspot.com Edu_Zegarr_ch

2.63

The tank is divided into two independent chambers. Air pressure is present in both sections. A manometer measures the difference between these pressures. A sphere of wood (specific gravity is 0.6) is fastened into the wall as shown. (a) Compute the vertical force on the sphere. (b) Compute the magnitude (only) of the resultant horizontal force on the sphere from the fluids.

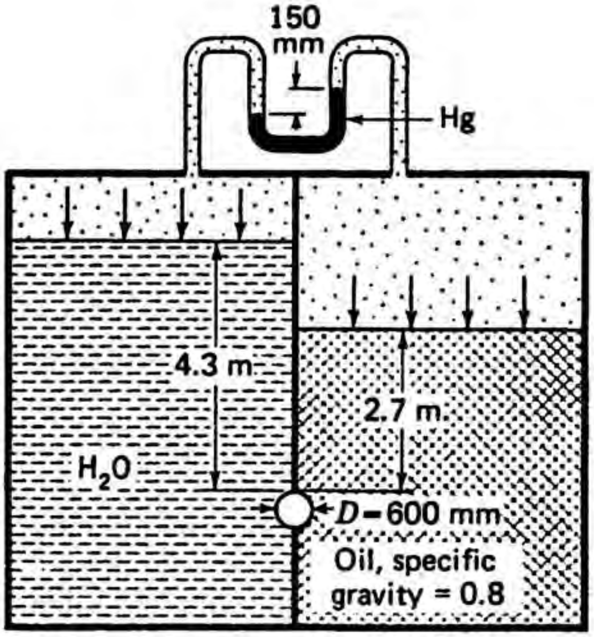


a) Buoyant Force. Compute vertical force on hemisphere in water and hemisphere in oil.

$$(F_y)_{H_2O} = (9{,}806)\left(\frac{1}{2}\right)\left(\frac{4}{3}\right)(\pi)(.300)^3 = 554.5\ N$$

$$(F_y)_{oil} = (9{,}806)\left(\frac{1}{2}\right)\left(\frac{4}{3}\right)(\pi)(.300)^3(.8) = 443.6\ N$$

$$F_B = 998.1\ N$$

b) Horizontal Force. Find the difference in pressure between both sides at the center of the circular area projected by the hemisphere in horizontal direction.

$$p_A - p_B = [(9{,}806)(4.3 + .3)] - [-(9{,}806)(13.6)(.150) + (3.0)(9{,}806)(.8)] = 41{,}578\ Pa$$

$$\therefore\ F_H = (41{,}578)(\pi)(.300)^2 = 11.755\ kN$$

http://ingesolucionarios.blogspot.com

2.64

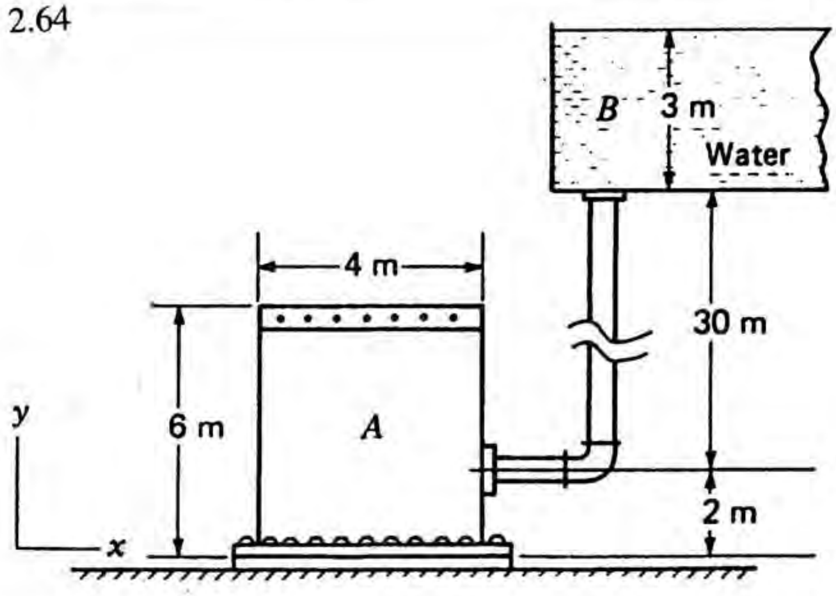


A 500-N tank $A$ is full of water and is connected to open tank $B$ through a pipe. If the tank $A$ wall is 2 mm in thickness, determine the tensile stresses $\tau_{xx}$ and $\tau_{yy}$ from air and water in the tank wall at a point at $y = 3$ m. Also for 40 bolts at the base, compute the force per bolt holding the end plate of the tank. *Hint:* For the stresses, consider two free-body diagrams including a half circle of a horizontal unit strip.

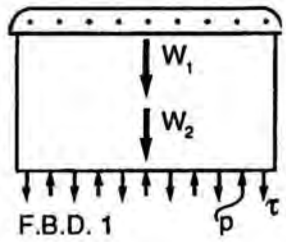


a)

$$p = (9{,}806)[3+30-1] = 3.14\times10^5\ Pa$$

**From Equilibrium**

$$(3.14\times10^5)(\pi)\left(\frac{4^2}{4}\right) - (\tau_{yy})(\pi)(4)(.002) - \left(\frac{1}{2}\right)(500) - (9{,}806)(\pi)\left(\frac{4^2}{4}\right)(3) = 0$$

$$\tau_{yy} = 1.423\times10^8\ Pa$$

Now consider unit half strip.

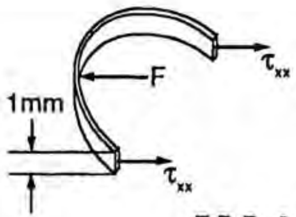


F.B.D. 2

**From Equilibrium**

$$2[(\tau_{xx})(.002)(.001)] = (3.14\times10^5)(4)(.001)$$

$$\tau_{xx} = 3.14\times10^8\ Pa$$



http://ingesolucionarios.blogspot.com Edu_Zegarr_ch

http://ingesolucionarios.blogspot.com

(cont.)

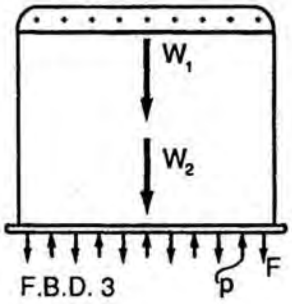


b) $$p = (9{,}806)[3+30+2] = 3.432\times10^5 \ Pa$$

**Equilibrium** requires that:

$$(3.432\times10^5)\left(\frac{\pi 4^2}{4}\right) - 40F - 500 - (9{,}806)\left(\frac{\pi 4^2}{4}\right)(6) = 0$$

$F = 89.3 \ kN$ per bolt.



http://ingesolucionarios.blogspot.com Edu_Zegarr_ch

http://ingesolucionarios.blogspot.com

2.65

Water fills a spherical tank with a pressure $p_1 = 300$ kPa gage. Fifty bolts hold the upper half of the tank to the lower half with a force between flanges of 5000 N. What is the force per bolt? Each half of the sphere weighs 2000 N.

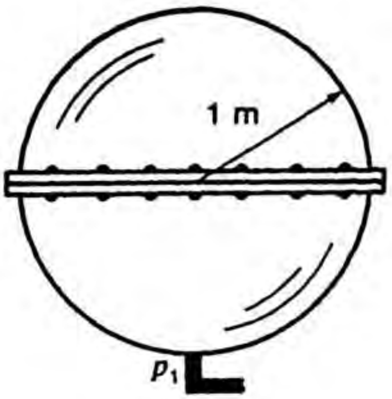


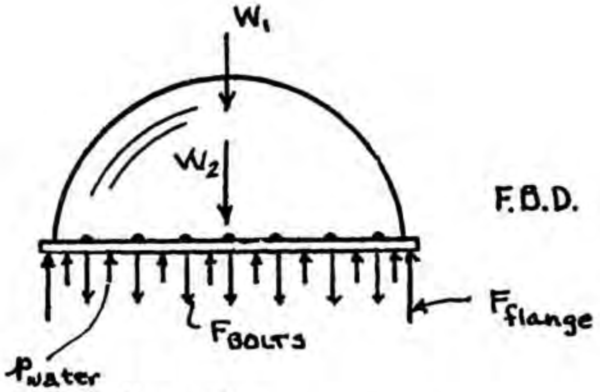


Free body of upper half including water

$$p = p_1 - \gamma(r) = 300{,}000 - (9{,}806)(1) = 290{,}194\ Pa$$

Equilibrium

$$-F_{BOLTS} + 5{,}000 + (290{,}194)(\pi)(1^2) - 2{,}000 - \frac{1}{2}\frac{4}{3}(\pi)(1^3)(9{,}806) = 0$$

$$F_{BOLTS} = 8.941\times10^5\ N$$

$$\therefore\quad F_{BOLT} = 1.778\times10^4\ N$$



http://ingesolucionarios.blogspot.com Edu_Zegarr_ch

http://ingesolucionarios.blogspot.com

2.66

Make a free body diagram of cone cutting the bolts.

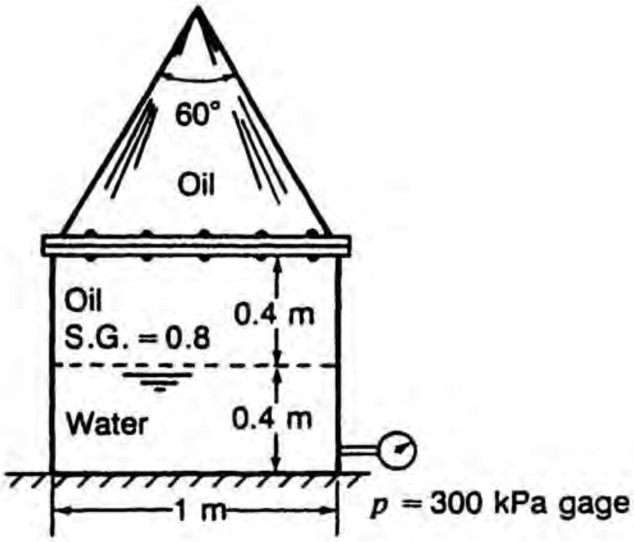


An open-ended 60° conical container is bolted to a cylinder. The cylinder contains oil and water with oil extending into the conical container filling the latter. Find the force on each of 30 bolts connecting the cone and cylinder so that there is a force of 6000 N between flanges of the two containers. The volume of a cone is $\frac{1}{3}Ah$ where $A$ is the area of the base and $h$ is the height. The cone weighs 1000 N and the cylinder weighs 1600 N.

The **pressure** $p$ at bottom of cone:

$$p = 300{,}000 - (9{,}806)(.4) - (9{,}806)(.8)(.4) = 2.929\times10^5 \; Pa \; gauge$$

$$W_{OIL} = (.8)(9{,}806)\left(\frac{1}{3}\right)(\pi)(.5)^2(.866) = 1{,}779 \; N$$

Summing forces in vertical direction:

$$-1{,}000 - 1{,}779 - 30F_{BOLT} + 2.929\times10^5\left(\frac{\pi}{4}\right)(1^2) + 6{,}000 = 0$$

$$\boxed{F_{BOLT} = 7{,}775 \; N}$$

2.67

A tank is hermetically sealed into two compartments by plate $AB$. A cylinder of diameter 0.3 m protrudes above and below the seal $AB$ and is welded to the seal $AB$. What is the vertical force on the cylinder?

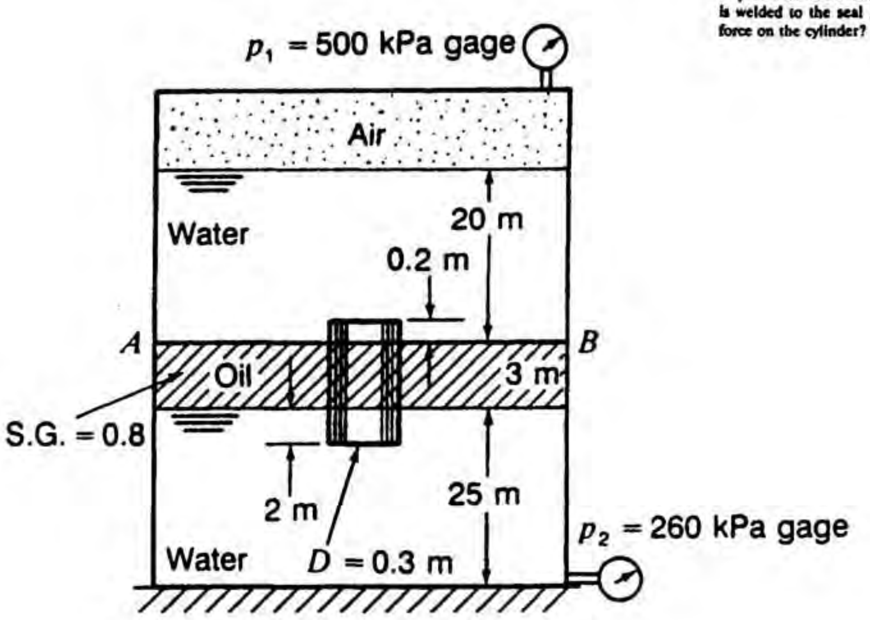


Look at **upper surface.** Use gauge pressures.

$$F_1 = [(500{,}000) + (9{,}806)(20-.2)]\left(\frac{\pi}{4}\right)(.3)^2 = 49{,}070\ N$$

Look at **lower surface.**

$$F_2 = [(260{,}000) - (9{,}806)(25-2)]\ \frac{\pi}{4}\ (.3)^2 = 2{,}436\ N$$

$$NET\ FORCE = 49{,}070 - 2{,}436 = \boxed{46{,}630\ N\ \ Down}$$

Do Prob. 2.67 for when a hemisphere of diameter 0.3 m is added to the top and bottom of the cylinder and $p_2$ = 360 kPa g.

2.68

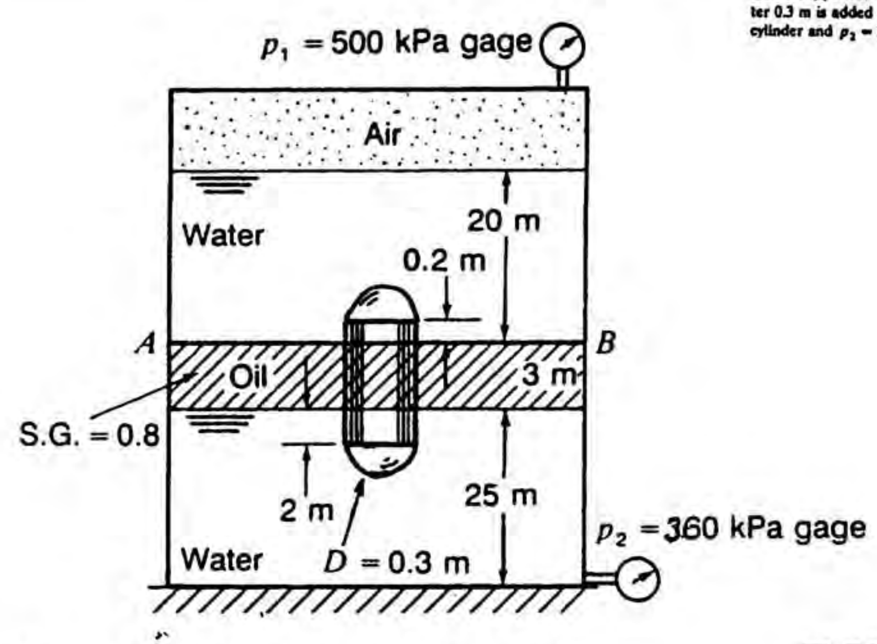


a) Look at upper surface (use gauge pressures):

$$F_1 = -\left\{(500{,}000)\left(\frac{\pi}{4}\right)(.3^2) + (9{,}806)\left[\frac{\pi}{4}(.3^2)(20-.2)\right] - \frac{1}{2}\left(\frac{4}{3}\right)(\pi)(.15)^3(9{,}806)\right\} = -49{,}000\ N$$

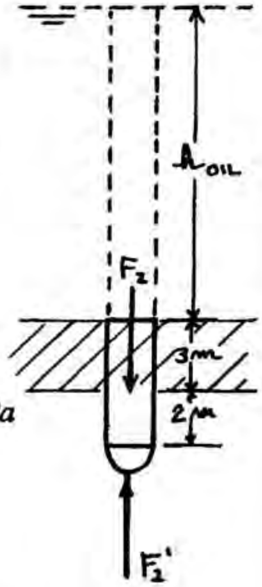


b) Look at lower surface (guage pressures):

$$p_B = (360{,}000) - (25)(9{,}806) - (.8)(3)(9{,}806) = 91{,}316\ Pa$$

$$(h)_{OIL} = \frac{91{,}136}{(9{,}806)(.8)} = 11.64$$

Make hollow cylinder to support column of water and oil right to free surface.

$$F_2 = -\frac{\pi}{4}(.3)^2[(9{,}806)(2) + (.8)(9{,}806)(11.64+3)] - \frac{1}{2}\frac{4}{3}(\pi)(.15)^3(9{,}806)$$

$$F_2' = 9{,}505 + 69.318 = 9{,}574\ N$$

$$F_{TOTAL} = 9{,}574 - 49{,}000 = \boxed{-39{,}426\ N}$$

http://ingesolucionarios.blogspot.com

2.69 A tank is separated into two distinct parts by a stiff plate *EF*. A block *A* fits in the top part and block *B* fits in the lower part. If *A* and *B* are 3 ft long, find:
(*a*) horizontal force on the blocks from fluids.
(*b*) the total vertical force on the blocks from fluids.

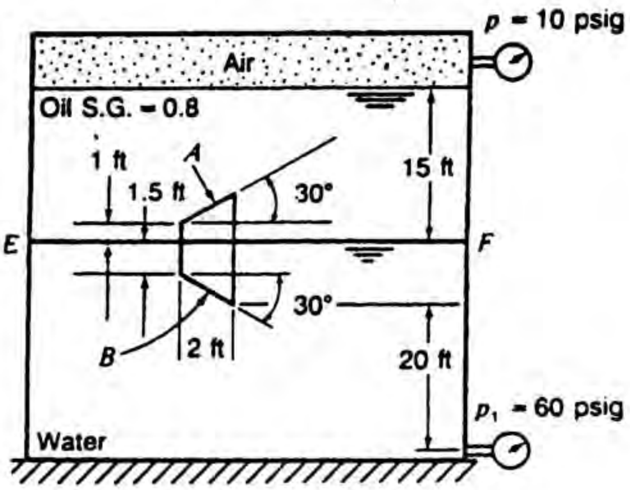


a) Oil Zero

Water Zero

b) Vertical Force on A.

Use gauge pressure.

$$(F_A)_{VERT} = -\{(10)(144)(2)(3) + (.8)(62.4)(2)(3)(14) - (.8)(62.4)\left(\frac{1}{2}\right)(2)(3)(2)\tan 30°\}$$

$$= -12{,}660\ lb$$

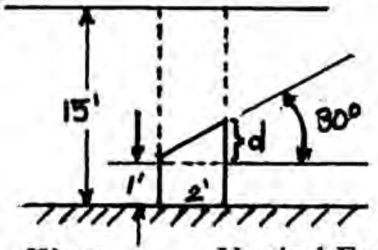


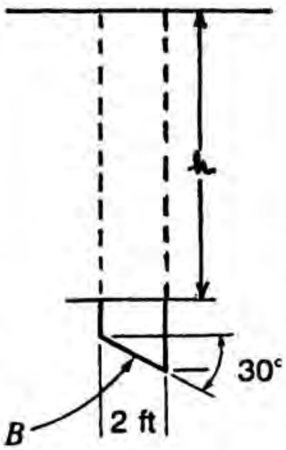


Vertical Force on B.

$$p_F = (60)(144) - (62.4)(20+1.5+2\tan 30°) = 7{,}226\ psf$$

$$h = \frac{7{,}226}{62.4} = 115.8\ ft$$

Make believe we have a hollow body submerged in the water. Look at wt. of prism of water held up by insider surface of the hollow block.

$$F_B = (62.4)(2)(3)(115.8+1.5) + (62.4)\left(\frac{1}{2}\right)(2)(2\tan 30°)(3)$$

$$\boxed{F_B = 44{,}133\ lb\ \ up}$$

Total Force:

$$F_{TOTAL} = -12{,}660 + 44{,}133 = \boxed{31{,}473\ lb}$$

http://ingesolucionarios.blogspot.com

2.70

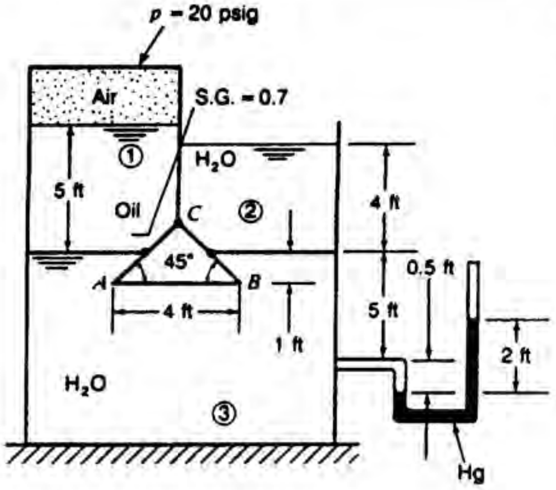


A tank in Fig. 2.70 is made up of three compartments ①, ②, and ③ separated from each other. Triangle *ABC* is 3 ft in length and separates the three compartments. Find the net vertical force on *ABC* from the fluids touching it.

3.70

A. Look at bottom (use gauge pressure).

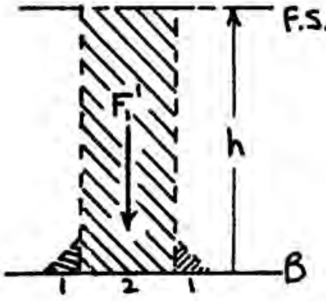


$$p_B = (13.6)(62.4)(2) - (62.4)(.5+5-1) = 1416.5 \ psf$$

$$h = \frac{1{,}416.5}{62.4} = 22.7 \ ft$$

$$\therefore \ F_1 = (2)(3)(22.7)(62.4) + (2)\left(\frac{1}{2}\right)(1)^2(3)(62.4) = 8{,}686 \ lb$$

B. Upper left.

$$F_2 \left\{ (20)(144)(1)(3) + (.7)(62.4)(5)(3)(1) - (.7)(62.4)(1)(3)\left(\frac{1}{2}\right)(1) \right\}$$

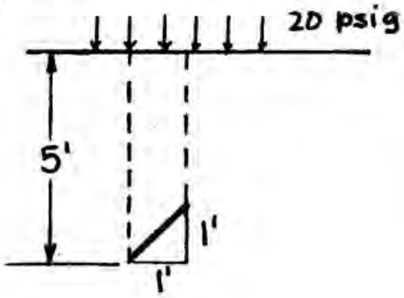


$$\boxed{F_2 = -9{,}229.7 \ lb}$$

C. Upper right.

$$F_3 = -(1)(3)(4)(62.4) + \frac{1}{2}(1)^2(3)(62.4)$$

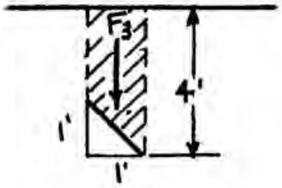


$$\boxed{F_3 = -655.2 \ lb}$$

$\therefore$ Net Vertical Force:

$$F_{TOTAL} = 8{,}686 - 9229.7 - 655.2 = \underline{1{,}199 \ lb \ \ DOWN}$$

http://ingesolucionarios.blogspot.com

2.71

A tank containing water and air under pressure is shown. What are the vertical and horizontal forces on $ABC$ from water inside and air outside? Note that water completely fills part of the tank on the right and hence wets $ABC$.

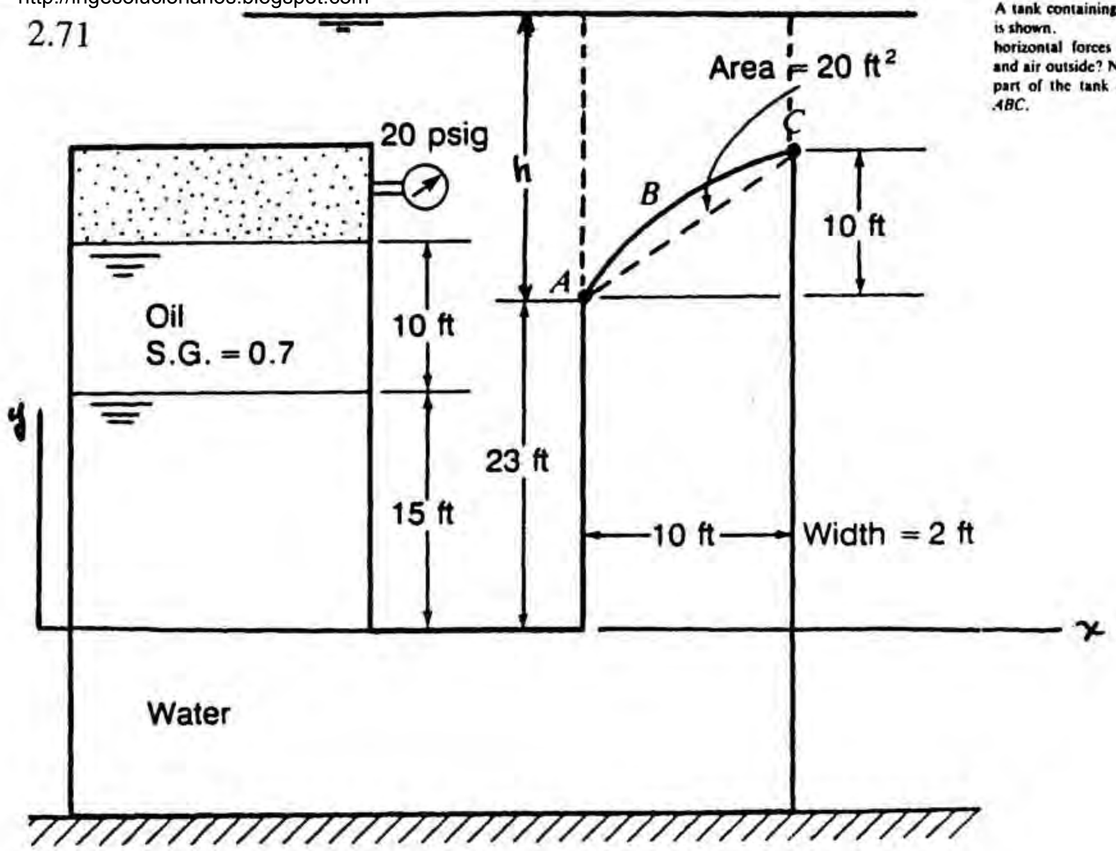


Using gauge pressures, find $p_A$ gauge.

$$p_A = (20)(144) + (.7)(62.4)(10) + (62.4)(15-23) = 2{,}818 \quad psf$$

$$h = \frac{2{,}818}{62.4} = 45.154 \quad ft$$

1) Vertical Force. Look at column above $AB$ to free surface.

$$(F_y) = -\left[(45.154)(10)(2) - (20)(2) - \frac{1}{2}(10)(10)(2)\right]62.4 = \boxed{-47{,}616 \quad lb}$$

2) Horizontal Force.

$$F_x = [(2{,}818)-(62.4)(5)](10)(2) = \boxed{-50{,}120 \quad lb}$$

http://ingesolucionarios.blogspot.com

2.72

There are four compartments completely separated from each other. One-quarter of the sphere shown resides in each compartment. Find the:
(*a*) total vertical force from fluids.
(*b*) total horizontal force from fluids.

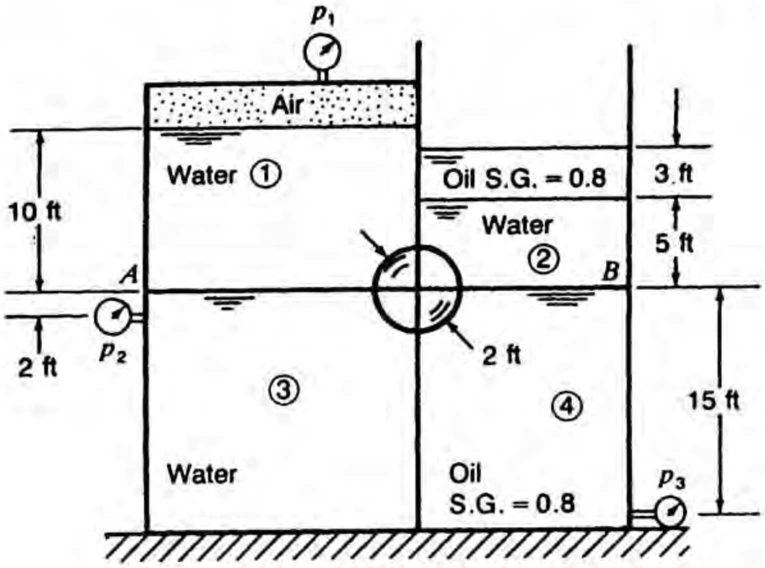


$$\begin{cases} \gamma = 62.4 \text{ lb/ft}^3 \\ p_1 = 5 \text{ psig} \\ p_2 = 10 \text{ psig} \\ p_3 = 13 \text{ psig} \end{cases}$$

## HORIZONTAL FORCE

**Compartment I.**

$$p_c = (5)(144) + [10-(.424)(1)]62.4 = 1{,}318 \quad psf$$

$$(F_H)_1 = (1{,}318)\left(\frac{1}{2}\right)\pi(1^2) = 2{,}070 \quad lb$$

**Compartment II.**

$$p_c = (.8)(62.4)(3)+(62.4)[.5-.424(1)] = 435.3 \quad psf$$

$$(F_H)_2 = -(4{,}353)\left(\frac{1}{2}\right)\pi(1^2) = -683.8 \quad lb$$

**Compartment III.**

$$p_c = (10)(144)-(62.4)[2-(.424)(1)] = 1{,}342 \quad psf$$

$$(F_H)_3 = (1{,}342)\left(\frac{1}{2}\right)(\pi)(1^2) = 2{,}107 \quad lb$$

http://ingesolucionarios.blogspot.com

(cont.) **Compartment IV.**

$$p_c = (13)(144) - (.8)(62.4)[15-(.424)(1)] = 1{,}144\ psf$$

$$(F_H)_{IV} = -(1{,}144)\left(\frac{1}{2}\right)(\pi)(1^2) = -1{,}798\ lb$$

$$\therefore\ (F_H)_{TOTAL} = 2{,}070 - 683.8 + 2{,}107 - 1{,}798 = \boxed{1{,}695\ \ lb}$$

**VERTICAL FORCE**

**Compartment I.** Use **gauge pressures.**

$$(F_V)_1 = -\left[(5)(144)\left(\frac{1}{2}\pi\right)(1^2)+(62.4)\left(\frac{1}{2}\pi\right)(1^2)(10)-\frac{1}{4}\left(\frac{4}{3}\right)(\pi)(1^3)(62.4)\right] = -2{,}046\ \ lb$$

**Compartment II.**

$$(F_V)_2 = -\left[(62.4)\left(\frac{1}{2}\right)(\pi)(1^2)(5)-\left(\frac{1}{4}\right)\left(\frac{4}{3}\right)(\pi)(1^3)(62.4)+(.8)(62.4)\left(\frac{1}{2}\right)(\pi)(1^2)(3)\right] = -660\ \ lb$$

**Compartment III.**

$$p_A = (10)(144)-(2)(62.4) = 1{,}315\ \ psf$$

$$h = \frac{1{,}315}{62.4} = 21.08\ \ ft$$

$$(F_V)_3 = \left[21.08\left(\frac{\pi}{2}\right)(1^2)(62.4) + \left(\frac{1}{4}\right)\left(\frac{4}{3}\right)\pi(1^3)(62.4)\right] = 2{,}131\ \ lb$$

**Compartment IV.**

$$p_B = (13)(144)-(.8)(62.4)(15) = 1{,}123\ \ psf$$

$$h = \frac{1{,}123}{(.8)(62.4)} = 22.5\ \ ft$$

$$(F_V)_4 = (.8)\left[(22.5)\left(\frac{1}{2}\right)\pi(1^2)(62.4) + \left(\frac{1}{4}\right)\left(\frac{4}{3}\right)\pi(1^3)(62.4)\right] = 1{,}816.6\ \ lb$$

$$\therefore\ (F_V)_{TOTAL} = 2{,}131 + 1{,}816.6 - 660 - 2{,}046 = \boxed{1{,}241.6\ \ lb}$$

http://ingesolucionarios.blogspot.com

2.73

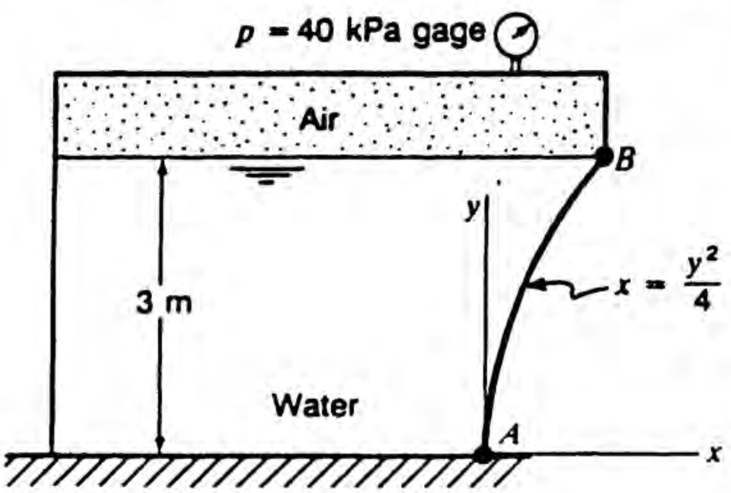


Find the shear force and bending moment on the gate AB at A in Fig. . The gate has a width of 1 m. *Hint:* ds(along door) = $\sqrt{dx^2 + dy^2} = [1 + (dy/dx)^2]^{1/2}\,dx$.

a) Shear Force:

Get horizontal force on door.

$$F_H = [40{,}000 + (1.5)(9{,}806)](3)(1) = 1.641\times10^5\ N$$

$$\therefore \quad \boxed{V = 1.641\times10^5\ \ N}$$

b) Bending Moment:

$$dM = -(p\,ds)(1)(\sin\alpha)(y) - (p\,ds)(1)(\cos\alpha)(x)$$

$$dM = [40{,}000+(9{,}806)(3-y)]\{y\sin\alpha + x\cos\alpha\}\sqrt{dx^2+dy^2}$$

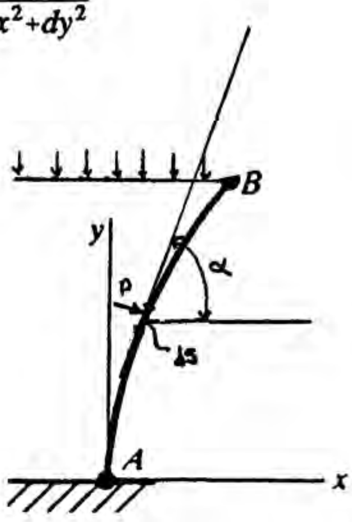


$$\frac{dy}{dx} = \tan\alpha = \left(\frac{2}{y}\right)$$

$$\alpha = \tan^{-1}\left(\frac{2}{y}\right)$$

$$\left\{\begin{aligned} \sin\alpha &= \frac{2}{\sqrt{y^2+4}} \\ \cos\alpha &= \frac{y}{\sqrt{y^2+4}} \end{aligned}\right.$$

Also,

http://ingesolucionarios.blogspot.com

**(cont.)**

$$(dx^2+dy^2)^{\frac{1}{2}} = \left(1+\left(\frac{dy}{dx}\right)^2\right)^{\frac{1}{2}}dx = \left(1+\frac{4}{y^2}\right)^{\frac{1}{2}}dx$$

$$\therefore \quad dM = -9{,}806[7.079-y]\left\{\left(1+\frac{4}{y^2}\right)^{\frac{1}{2}}\left(\frac{2y}{\sqrt{y^2+4}}+\frac{xy}{\sqrt{y^2+4}}\right)\right\}dx$$

**Simplify**

$$dM = -9{,}806(7.079-y)\left(\frac{y^2+4}{y^2}\right)^{\frac{1}{2}}\left(\frac{2y}{\sqrt{y^2+4}}+\frac{xy}{\sqrt{y^2+4}}\right)dx$$

$$dM = -9{,}806(7.079-y)(2+x)dx$$

NOTE $y = 2\sqrt{x}$

**Substitute**

$$dM = -9{,}806[(7.079 - 2\sqrt{x})](2+x)dx$$

$$dM = -9{,}806[14.158 + 7.079x - 4\sqrt{x} - 2x^{3/2}]dy$$

**Integrate**

$$M = \int_0^{9/4}(-9{,}806)[14.158 + 7.079x - 4\sqrt{x} - 2x^{3/2}]dx$$

$$= -(9{,}806)\left[(14.158)\left(\frac{9}{4}\right)+\frac{7.079}{2}\left(\frac{9}{4}\right)^2-\frac{(4)}{\left(\frac{3}{2}\right)}\left(\frac{9}{4}\right)^{3/2}-\frac{2}{\left(\frac{5}{2}\right)}\left(\frac{9}{4}\right)^{5/2}\right]$$

$$\boxed{M = -3.403\times10^5 \quad N\text{-}m}$$

http://ingesolucionarios.blogspot.com

2.74

What is the total weight of barge and load. The barge is 6 m in width.

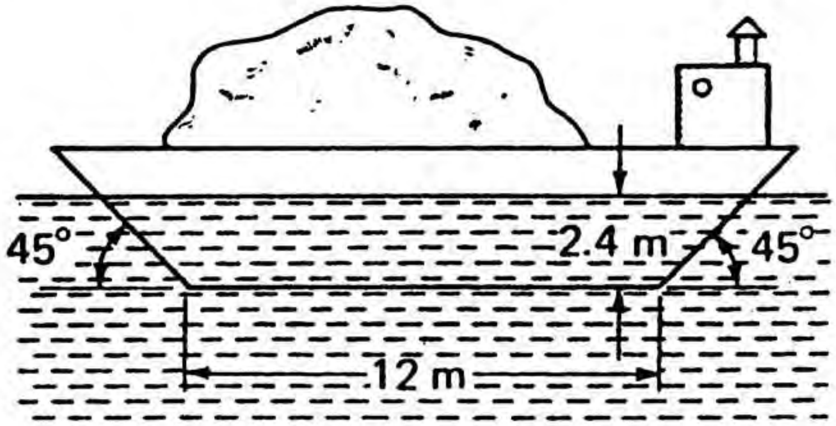


From Archimedes and equilibrium we have:

$$W = (\gamma)(V_{displaced})$$

$$= (9{,}806)\left[(12)(2.4)(6) + \left(\frac{1}{2}\right)(2)(2.4)^2(6)\right]$$

$$= 2.03\times10^6\ N = 2.03\ MN$$

http://ingesolucionarios.blogspot.com Edu_Zegarr_ch

http://ingesolucionarios.blogspot.com

2.75

A wedge of wood having a specific gravity of 0.6 is forced into water by a 150 lb force. The wedge is 2 ft in width. What is the depth $d$?

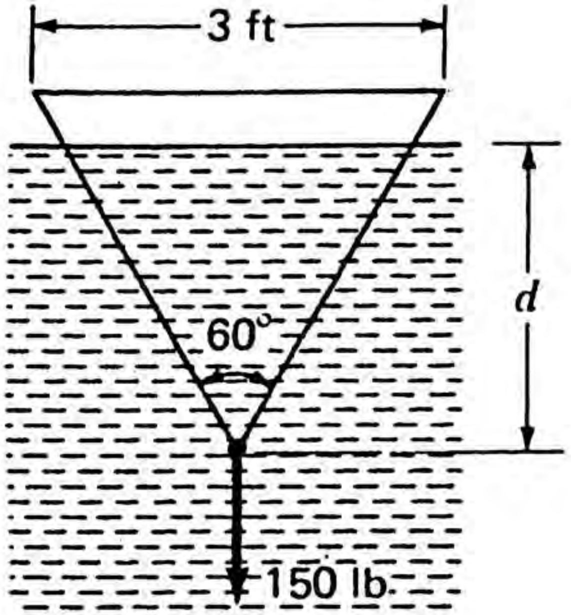


The volume displaced in terms of $d$ is:

$$V = 2\left[\frac{(d)(2d\ \tan 30°)}{2}\right] = 1.155d^2$$

The resulting **buoyant** force is:

$$F_B = (1.155d^2)(62.4) = 72.1d^2$$

The weight of the wedge is:

$$W = \left[(2)\left(\frac{1}{2}\right)(3)\left(\frac{1.5}{\tan 30°}\right)\right](.6)(62.4) = 292\ lb$$

Using **Archimedes** principle and equilibrium, we have:

$$-(292+150) + (1.155d^2)(62.4) = 0$$

$$\boxed{d = 2.48\ ft}$$

http://ingesolucionarios.blogspot.com

2.76

A tank is filled to the edge with water. If a cube 600 mm on an edge and weighing 445 N is lowered slowly into the water until it floats, how much water flows over the edge of the tank if no appreciable waves are formed during the action? Neglect effects of adhesion at the edge of the tank.

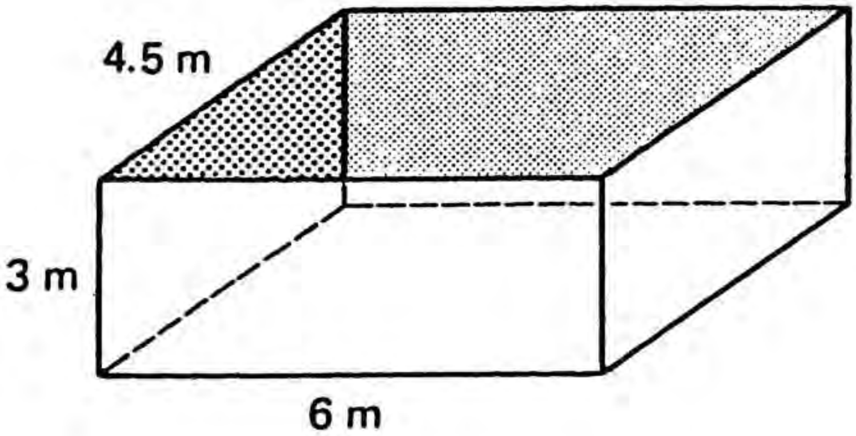


The cube will displace a volume of water $V$ which is determined from Archimedes to be:

$$V = \frac{445}{9{,}806} = .0454\ m^3$$

This must then be the amount of water that will overflow.

http://ingesolucionarios.blogspot.com

2.77

A cube of material weighing 445 N is lowered into a tank containing a layer of water over a layer of mercury. Determine the position of the block when it has reached equilibrium.

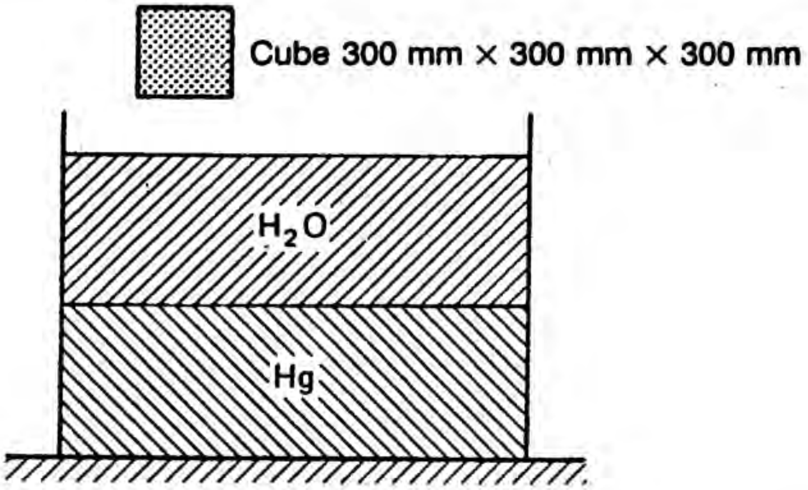


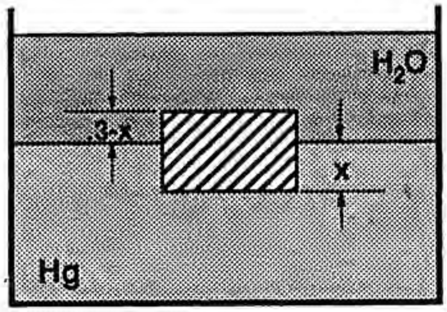


Since 1 $m^3$ of the block weighs $\left(\frac{1{,}000}{300}\right)^3(445) = 16{,}441\ N$ it will sink beneath the surface of the $H_2O$ and come to rest at the water-mercury free surface. Using Archimedes principle and equilibrium we have:

$$[(.3)(.3)(x)](9{,}806)(13.6) + (.3)(.3)(.3-x)(9{,}806) - 445 = 0$$

$$\therefore\ x = .01621\,m = 16.21\,mm$$

The bottom of the block will come to rest at a distance $16.21\,mm$ below the water-mercury free surface.

2.78

The two fluids on the surface of the sphere are not in contact with each other. Thus, the pressure in the lower fluid can be changed arbitrarily without affecting the pressure in the upper fluid.

2.79

In Example 22.3 0.28 $m^3$ of gasoline is lost, what is the weight of the minimum amount of ballast that must be released so as to cause the bathyscaph to start rising? At a depth of 11.3 km, what is the pressure in atmospheres on the outside surface of the cockpit if we take $\gamma$ of seawater having an average value of 10,150 $N/m^3$ over the depth? Finally, explain why the bathyscaph was designed using a liquid such as gasoline instead of a gas in the tank, and why the gasoline had to have "contact" with the seawater at $B$.

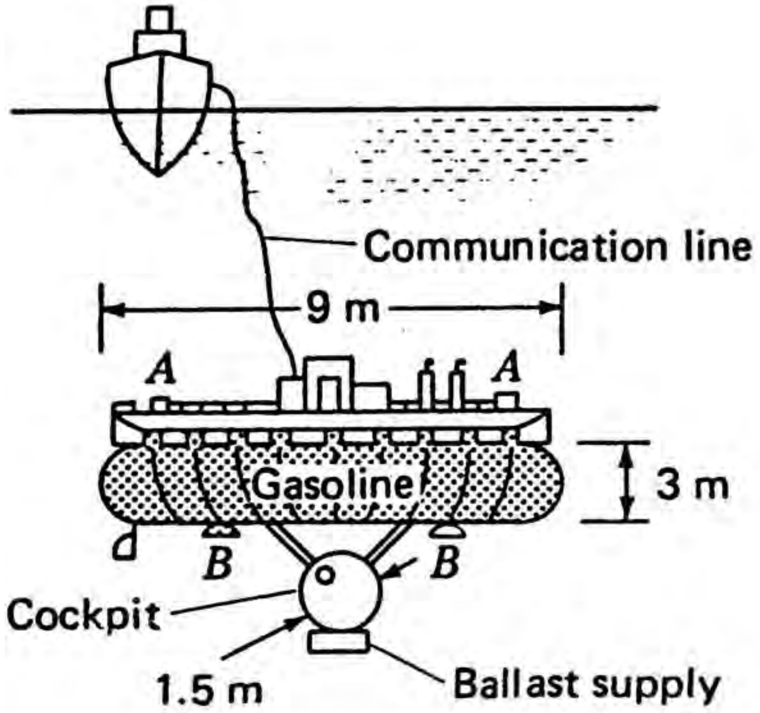


a) There is now an increase in weight of the bathyscaph because $.28\,m^3$ of sea water replace $.28\,m^3$ of gasoline in the bathyscaph tank. This increase in weight $\Delta W$ is:

$$\Delta W = (.28)[(10{,}150 - (.65)(10{,}150)] = 995\,N$$

Hence we must release a bit more than $995\,N$ of ballast.

b) $$p = \frac{\gamma d}{p_{atm}} + 1 = \frac{(10{,}150)(11.3\times10^3)}{101{,}325} + 1 = 1{,}133\,atm$$

c) A liquid such as gasoline will not compress significantly from the pressure as a gas would, and therefore, its buoyant effects are easier to predict and control.

d) Using open ports at the bottom of the gasoline cylinder simplifies design, since pressure inside and outside the cylinder will always be essentially equal.

http://ingesolucionarios.blogspot.com

An iceberg has a specific weight of 9000 N/m³ in ocean water, which has a specific weight of 10⁴ N/m³. If we observe a volume of 2.8 × 10³ m³ of the iceberg protruding above the free surface, what is the volume of the iceberg below the free surface of the ocean?

2.80 Given $V_{up} = 2.8\times10^3\ m^3$

Find $V_{up} + V_{bot} = V_T$

From **Archimedes** $(V_T)(9{,}000) = (V_{bot})(10{,}000)$

$$(2.8\times10^3 + V_{bot})(9{,}000) = V_{bot}(10{,}000)$$

$$\boxed{V_{bot} = 25.2\times10^3\ m^3}$$

---

2.81

A *hydrometer* is a device that uses the principle of buoyancy to determine specific gravity $S$ of a liquid. It is a device weighted by tiny metal spheres to have a total weight $W$. It has a stem of constant cross section which protrudes through the free surface. It is calibrated by marking the position of the free surface when floating in distilled water ($S = 1$) and by determining its submerged volume $V_0$. When floated in another liquid, the stem may sit lower or higher at the free surface from this position by distance $\Delta h$, as shown to the right in Fig. P3.81.

Show that

$$\Delta h = \frac{V_0}{A_s}\frac{S-1}{S}$$

where $A_s$ is the cross section of the stem and $S$ is the specific gravity of the liquid. We can thus calibrate the stem to read specific gravity directly.

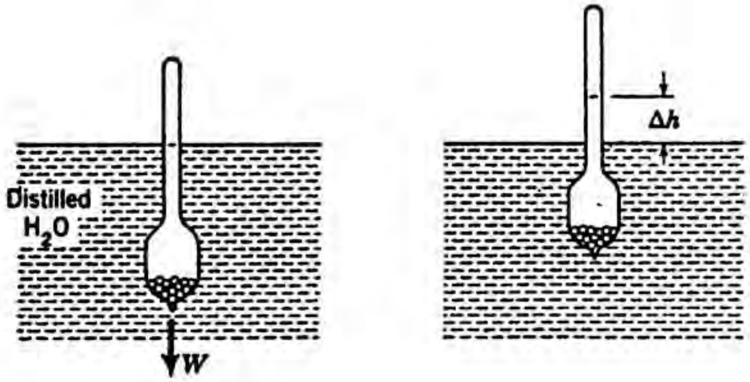


In second fluid the volume displaced is: $V_o + (\Delta h)(A_s)$

$$\therefore\ F_{B_1} = [(V_o + (\Delta h)(A_s)](S)(62.4) \qquad \text{(a)}$$

But $F_{B_1} = W$, the weight of the hydrometer. But in the distilled water the buoyant force $F_{B_2}$ again equals $W$.

Thus: $F_{B_2} = (V_0)(62.4) = F_{B_1}$

Substituting into Eq. (a), we get: $(V_0)(62.4) = (V_o + \Delta h\, A_s)(S)(62.4)$

$$\Delta h = \left[\frac{V_o}{S} - V_o\right]\frac{1}{A_s} = \frac{V_o}{A_s}\left(\frac{S-1}{S}\right)$$

http://ingesolucionarios.blogspot.com

2.82

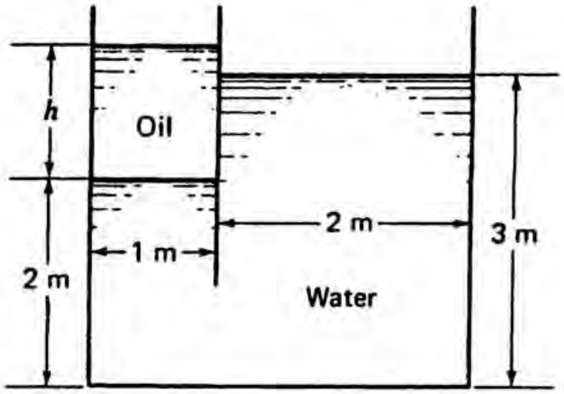


A rectangular tank of internal width 6 m is partitioned as shown, and contains oil and water. If the specific gravity of oil is 0.82, what must $h$ be? Next, if a 1000-N block of wood is placed in flotation in the oil, what is the rise of the free surface of the water in contact with the air?

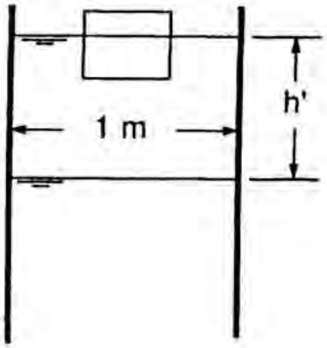


a) Find $h$ .

We compute the pressure at the bottom of the tank by descending from each of the two free surfaces in contact with air. They must be equal. Thus:

$$p_{atm} + (h)(.82)(9{,}806) + (2)(9{,}806) = (3)(9{,}806) + p_{atm}$$

$$h = 1.220 \ m$$

b) With the $1{,}000N$ block in flotation, find new value of $h$ . First using Archimedes and the fact that the volume of oil does not change, we have

$$(h)(1)(6) = (1)(6)(h') - \frac{1{,}000}{(9{,}806)(.82)} \qquad h' = 1.2407$$

Let us say that the oil-water free surface drops by a distance $\delta$ . Then the free surface of the water with air must rise an amount $\frac{1}{2}\delta$ because of incompressibility of the water. Equating pressures at the bottom, as in part (a), we then get:

$$p_{atm} + \gamma_{oil} h' + \gamma_{H_2O}(2-\delta) = p_{atm} + \gamma_{H_2O}\left(3 + \frac{\delta}{2}\right)$$

$$\therefore \ (9{,}806)(.82)(1.2407) + (9{,}806)(2-\delta) = (9{,}806)\left(3 + \frac{\delta}{2}\right)$$

$$\delta = .01160 \ m = 11.60 \ mm$$

$$\boxed{\therefore \ \frac{\delta}{2} = 5.79 \ mm}$$

The free surface of water at right rises $5.79 \ mm$

http://ingesolucionarios.blogspot.com Edu_Zegarr_ch

2.83

A balloon of $2.8 \times 10^3$ $m^3$ is filled with hydrogen having a specific weight of 1.1 $N/m^3$.
(*a*) What lift is the balloon capable of at the earth's surface if the balloon weighs 1335 N? The temperature is 15°C.
(*b*) What lift is the balloon capable of at 9150 m U.S. Standard Atmosphere, assuming that the volume has increased 5 percent?

a) At the earth's surface

$$\rho_0 = 1.226 \ kg/m^3 \quad \text{for air}$$

Weight of displaced air is:

$$(\rho_0 g)(2.8\times10^3) = 3.37\times10^4 \ N = 33.67 \ kN$$

Weight of hydrogen is:

$$(\rho_H g)(2.8\times10^3) = (1.1)(2.8\times10^3) = 3{,}080 \ N = 3.08 \ kN$$

Upward Force = 33.67 - 3.08 - 1.335 = **29.3 kN**

b) At 9,150$m$ we have for air density:

$$\frac{\rho}{\rho_0} = .374$$

Take $g$ as 9.81 $m/\sec^2$. The weight of air displaced is:

$$[(\rho_0)(.374)](g)[(1.05)(2.8\times10^3)] = 13.224 \ kN$$

Weight of hydrogen still 3.08 $kN$. Upward force is:

13.224 - 3.08 - 1.335 = **8.81 kN**

2.84

A wooden rod weighing 5 lb is mounted on a hinge below the free surface. The rod is 10 ft long and uniform in cross section, and the support is 5 ft below the free surface. At what angle $\alpha$ will it come to rest when allowed to drop from a vertical position? The cross section of the rod is $\frac{3}{2}$ in² in area.

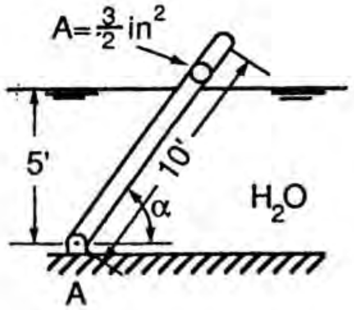


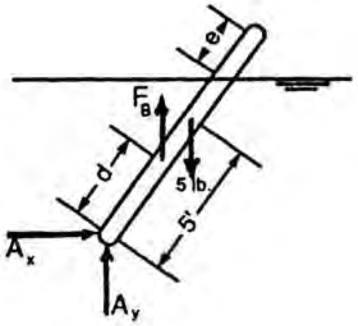


Rod weight is 5 lbs . $\quad F_B$ = *buoyant force* = $(10-e)\left(\dfrac{\left(\frac{3}{2}\right)}{144}\right)(62.4)$

Taking moments about A : $\quad (5)(5\cos\alpha) = (10-e)\left(\dfrac{3}{288}\right)(62.4)(d)\cos\alpha$

But $d = \left(\dfrac{10-e}{2}\right)$ . Hence we get: $\quad (25) = (10-e)(.650)\ \dfrac{(10-e)}{2}$

$$\therefore\ (10-e)^2 = \frac{50}{.650} = 76.9 \qquad 10-e = \pm\ 8.77$$

$$\therefore\ e = 1.229\ ft$$

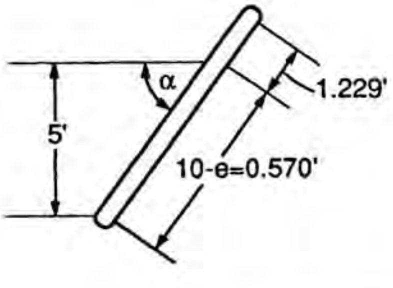


$\sin\alpha = \dfrac{5}{8.77} = .570 \qquad \therefore$

$$\boxed{\alpha = 34.8°}$$

http://ingesolucionarios.blogspot.com

2.85

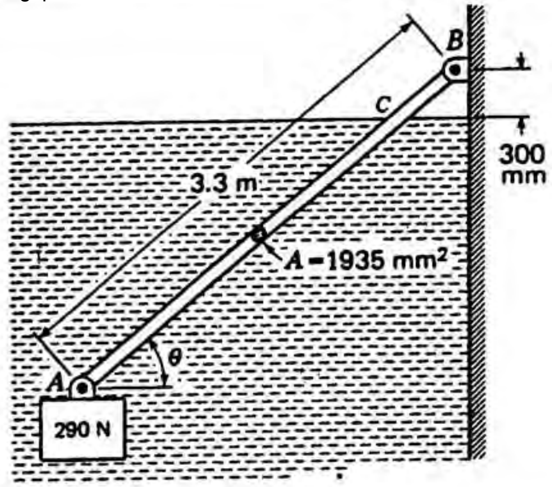


A block of material having a volume of 0.028 m³ and weighing 290 N is allowed to sink in the water. A wooden rod of length 3.3 m and a cross section of 1935 mm² is attached to the weight and also to the wall. If the rod weighs 13 N, what will the angle θ be for equilibrium?

$$F_{B_1} = (9{,}806)(.028) = 275\ N$$

$$F_{B_2} = (\overline{AC})[(1{,}935)(10^{-6})](9{,}806) = 18.97\ \overline{AC}\ N$$

$$\overline{AC} = \left[3.3 - \frac{.3}{\sin\theta}\right]$$

$$\therefore\ F_{B_2} = 18.97\left[3.3 - \frac{.3}{\sin\theta}\right]$$

$\underline{\Sigma M_o = 0}$

$$(290-275)(3.3\cos\theta) + \left(\frac{3.3}{2}\right)(13)\cos\theta \quad -(18.97)\left[3.3 - \frac{.3}{\sin\theta}\right]\left[\frac{\overline{AC}}{2} + \frac{.3}{\sin\theta}\right]\cos\theta = 0$$

$$49.5\cos\theta + 21.45\cos\theta - 18.97\left[3.3 - \frac{.3}{\sin\theta}\right]\left[\left(\frac{1}{2}\right)\left(3.3 - \frac{.3}{\sin\theta}\right) + \frac{.3}{\sin\theta}\right]\cos\theta = 0$$

$$3.74 = \left[3.3 - \frac{.3}{\sin\theta}\right]\left[1.650 + \frac{.3}{2\sin\theta}\right]$$

Multiply by $\sin^2\theta$ .

$$3.74\sin^3\theta = [3.3\sin\theta - .3][1.650\sin\theta + .15]$$

$$3.74\sin^2\theta = 5.445\sin^2\theta + .495\sin\theta - .495\sin^2\theta - .045 - 1.705\sin^2\theta = -.045$$

$$\boxed{\theta = 9.350°}$$

http://ingesolucionarios.blogspot.com

2.86

An object having the shape of a rectangular parallelepiped is being pushed slowly down an incline on narrow rails into water. The object

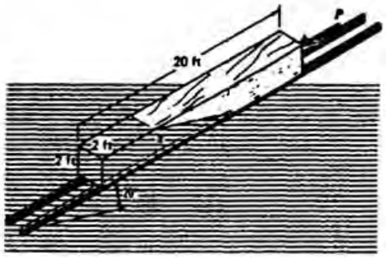


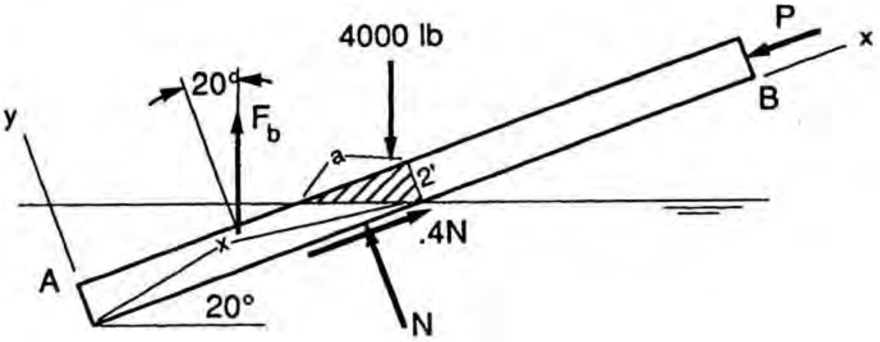


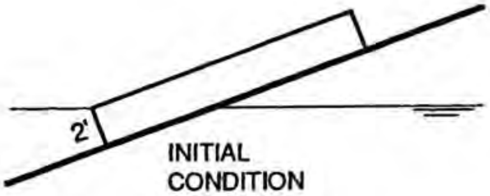


After the edge $A$ is wet the buoyant force (assuming hydrostatic pressure distribution) is:

$$F_B = \left[(2)(2)(x) - \left(\frac{1}{2}\right)(2)(a)(2)\right]62.4 = [(4)(x) + 10.99](62.4) = 250x - 686 \qquad (1)$$

where $x$ must exceed 5.5 .

$\underline{\Sigma F_x = 0}$

$$-P - 4{,}000\sin 20° + .4N + F_B \sin 20° = 0$$

$$-P - 1{,}368 + .4N + 85.5x - 235 = 0$$

Solve for $N$ .

$$N = 2.5P - 214x + 40.07$$

$\underline{\Sigma F_N = 0}$

$$N - 4{,}000\cos 20° + F_B \cos 20° = 0$$

Substituting for $N$ and $F_B$ using Eqs. (1) and (2):

$$2.5P - 214x + 4{,}007 - 3{,}760 + 235x - 645 = 0$$

Solve for $P$ .

$$\boxed{P = 159.2 - 8.4x}$$

http://ingesolucionarios.blogspot.com Edu_Zegarr_ch

http://ingesolucionarios.blogspot.com

2.87

In Prob. 2.86 is there a position $x$ for which there is impending rotation of the object as a result of buoyancy? If so, compute this value of $x$. The buoyant force as a function of $x$ from the previous solution is $250x - 686$ lb and the force $P$ from this solution is $159.2 - 8.4x$ pounds.

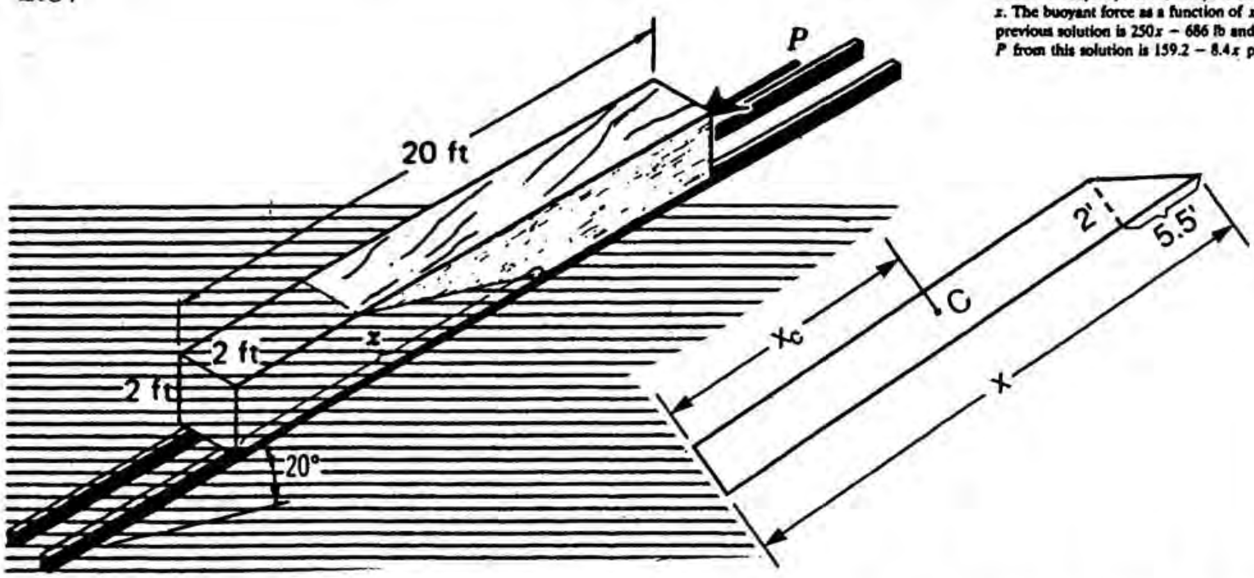


a) Rotation will start when the normal force is at $B$ and the moment about $B$ is zero. We must find the position of the buoyant force $F_B$. To do this find the centroid of the wetted side surface of the body. Thus taking moments about point $C$ we have:

$$\left[(2)(x-5.5)+\left(\frac{1}{2}\right)(2)(5.5)\right]x_c = [(2)(x-5.5)]\left(\frac{x-5.5}{2}\right)+\left(\frac{1}{2}\right)(2)(5.5)\left(x-\left(\frac{2}{3}\right)(5.5)\right)$$

$$\therefore\ (2x-11+5.5)x_c = (x-5.5)^2 + (5.5x-20.17)$$

$$x_c = \frac{x^2-5.5x+10.08}{(2x-5.5)}$$

Now taking moments about $B$, we can say

$$(4{,}000)(\cos 20°)(10) = F_B(20-x_c)\cos 20°$$

$$\therefore\ 40{,}000 = (250x-686)\left(20 - \frac{x^2-5.5x+10.08}{2x-5.5}\right)$$

Multiply through by $(2x-5.5)$

$$80{,}000x - 220{,}000 = (250x-686)(40x-110-x^2+5.5x-10.08)$$

$$80{,}000x - 220{,}000 = (250x-686)(-x^2+45.5x-120.1)$$

http://ingesolucionarios.blogspot.com

2.88

A hollow cone is forced into the water by a force $F$. Develop equations from which one may determine $e$. Neglect the weight of the cone and the thickness of the wall. Be sure to state any assumptions you make.

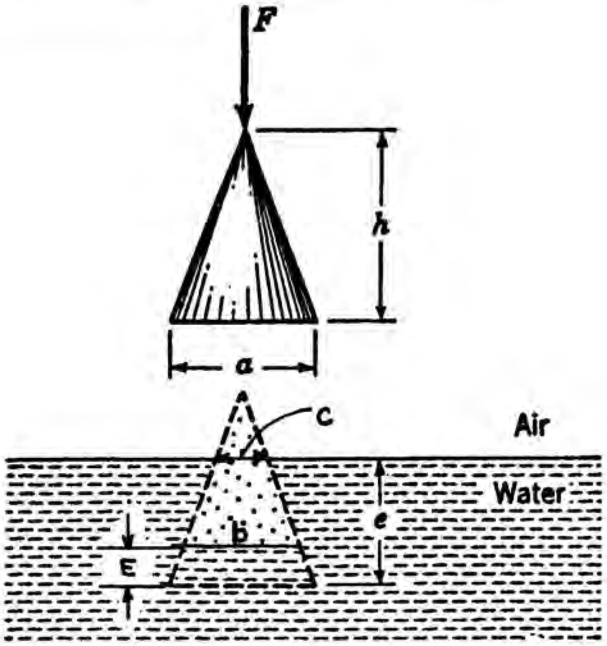


We will set up equations by which we can solve for $e$ .

a) **Using Archimedes principle:**

$$F_b = \left[\left(\frac{1}{3}\right)(\pi)\left(\frac{b}{2}\right)^2(h-E) - \left(\frac{1}{3}\right)(\pi)\left(\frac{c}{2}\right)^2(h-e)\right]\gamma$$

But
$$\begin{cases} b = \dfrac{h-E}{h}\,a \\ c = \dfrac{h-e}{h}\,a \end{cases}$$

$$\therefore\ F_B = \left[\left(\frac{1}{3}\right)(\pi)\ \frac{(h-E)^3}{4h^2}\ a^2 - \left(\frac{1}{3}\right)(\pi)\ \frac{(h-e)^3}{4h^2}\ a^2\right]\gamma \qquad (1)$$

Unknowns in Eq. (1) $E,e$

b) **Use isothermal gas law:**

$$p_{atm}\left[\left(\frac{1}{3}\right)(\pi)\left(\frac{a}{2}\right)^2 h\right] = p\left[\left(\frac{1}{3}\right)(\pi)\frac{(h-E)^3}{4h^2}\ a^2\right] \qquad (2)$$

c) **Hydrostatics:**

$$p = \gamma(e-E) + p_{atm} \qquad (3)$$

We now have three simultaneous equations for three unknowns $E$ , $e$ and $p$ .

http://ingesolucionarios.blogspot.com

2.89

A dirigible has a lift of 130,000 lb at sea level when unloaded. If the volume of helium is $3 \times 10^6$ ft$^3$, what is the weight of the dirigible including structure and gases within the dirigible? If the volume remains constant, at what height will it come to rest in a U.S. Standard Atmosphere? Use tables and linear interpolation. Take $g$ as constant for this problem.

a) Find weight of dirigible.

At sea level:

$$F_{BUOY} = (\gamma_{AIR})(V) = (.002378)(32.2)(3\times10^6) = 2.297\times10^5 \quad lb$$

$$\therefore \quad W_T = 2.297\times10^5 - 130,000 = \boxed{99,715 \quad lb}$$

b) To come to rest in U.S. STD. ATM.

$$F_{BUOY} = 99,715 = (\rho_{AIR})(32.2)(3\times10^6)$$

$$\therefore \quad \rho_{AIR} = .001032 \quad slugs/ft^3$$

$$\frac{\rho}{\rho_0} = \frac{.001032}{.002378} = .4341$$

**From Table B.4**

Interpolate:

| | | |
|---|---|---|
| .4481 | .4341 | |
| <u>.4325</u> | <u>.4325</u> | $\frac{.0016}{.0156} = .10256$ |
| .0156 | .0016 | |

$\therefore$ Elevation is 26,000 – (.1026)(1,000)

$$\boxed{25,897 \quad lb}$$

http://ingesolucionarios.blogspot.com
Edu_Zegarr_ch

http://ingesolucionarios.blogspot.com

2.90

A small balloon has a constant volume of 15 m³ and has a total weight on earth of 35.5 N. On a planet having $g = 5.02$ m/s² and an *isothermal* atmosphere with $\rho = 0.250$ kg/m³ and $p = 10{,}000$ Pa at sea level, what is the maximum load capacity at sea level? If released without this load, at what elevation will it come to rest in this atmosphere? Take $g$ as constant for this problem.

a) Weight on planet at sea level:

$$WT = \frac{5.02}{9.81}(35.5) = 18.166 \quad N$$

**Buoyant force:**

$$F_{BUOY} = (.250)(5.02)(15) = 18.825 \ N$$

∴ **load carrying capacity** at sea level:

$$LOAD = 18.825 - 18.166 = \boxed{.6588 \quad N}$$

b) Balloon comes to rest. (Archimedes)

$$(18.166) = (\rho)(5.02)(15)$$

$$\rho = .2413 \quad kg/m^3$$

for **isothermal** atmosphere

$$\frac{p_0}{\rho_0} = \frac{p}{\rho} \qquad \therefore \quad p = \frac{p_0}{\rho_0}\rho$$

$$\therefore \quad p = \frac{10{,}000}{.250}(.2413) = 9{,}650 \quad Pa$$

From Eq. 2.10:

$$p = p_1\left[e^{-\frac{\gamma_1}{p_1}(z-z_1)}\right] \qquad \ln\frac{p}{p_1} = -\frac{\gamma_1}{p_1}(z-z_1)$$

$$p_1 = 10{,}000 \ Pa \qquad z_1 = 0 \qquad \gamma_1 = (5.02)(.250)$$

$$\ln\left(\frac{9{,}650}{10{,}000}\right) = -\frac{(5.02)(.250)}{10{,}000}(z)$$

$$\boxed{z = 283.9 \quad m}$$

http://ingesolucionarios.blogspot.com

2.91

The outside diameter of the pipe is 250 mm. It is submerged in water in the tank. Find the total force on the pipe from the water in the tank.

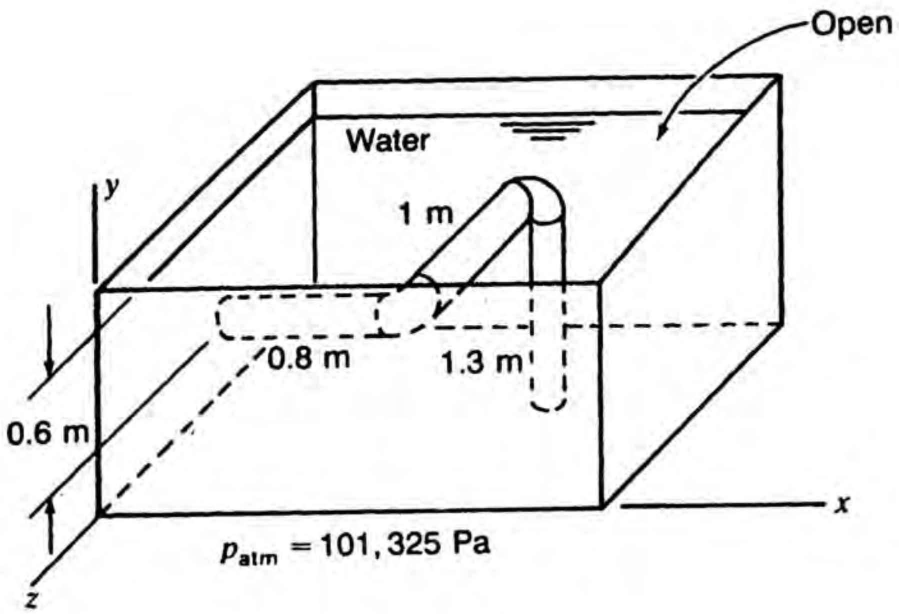


$$F_x = -[(.6)(9{,}806) + 101{,}325]\left(\frac{\pi}{4}\right)(.250)^2 = -5263 \ N$$

$$F_z = 0$$

$$F_y = (9{,}806)\left(\frac{\pi}{4}\right)(.250)^2(.8) + (9{,}806)\left(\frac{\pi}{4}\right)(.250)^2(1) - (101{,}325)\left(\frac{\pi}{4}\right)(.250)^2$$

$$-(.6)(9{,}806)\left(\frac{\pi}{4}\right)(.250^2) = -4{,}396 \ N$$

$$\therefore \ \vec{F} = -5263\hat{i} - 4{,}396\hat{j} \ N$$

http://ingesolucionarios.blogspot.com

2.92

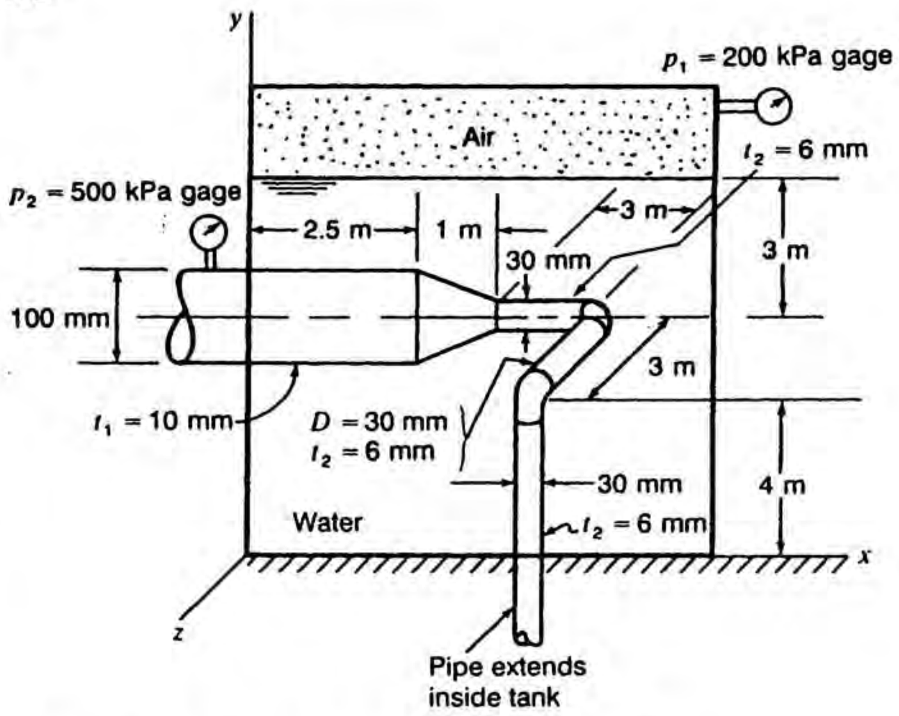


A pipe system goes through a tank of water. The tank is closed on the top with air above it at a pressure $p_1 = 200$ kPa gage. Inside the pipe is a static gas with a uniform pressure $p_2 = 500$ kPa gage.

(*a*) Find the force on the pipe from the static gas on the inside of the pipe.

(*b*) Find the force on the outside surface of the pipe from the water.

*Hint:* The volume of the frustrum of a cone is

$$\tfrac{1}{3}\left[A_{base} + A_{top} + \sqrt{A_{base}A_{top}}\right]\text{(height)}$$

a) **Force** on **inside surface** of pipe in tank:

$$\vec{F}_{INSIDE} = (500{,}000+101{,}325)\left(\frac{\pi}{4}\right)(.100-.02)^2\hat{i} + (500{,}000+101{,}325)\left(\frac{\pi}{4}\right)(.030-.012)^2\hat{j}$$

$$\boxed{\vec{F}_{INSIDE} = 3{,}023\hat{i} + 153.0\hat{j}\ N}$$

b) Force from **water** in tank on **outside:**

$$\vec{F}_{OUTSIDE} = -[(301{,}325+(3)(9{,}806)]\left(\frac{\pi}{4}\right)(.1)^2\hat{i} + (9{,}806)\left\{\left(\frac{\pi}{4}\right)(.1)^2(2.5)\right.$$

$$\left.+\frac{1}{3}\left[\left(\frac{\pi}{4}\right)(.1^2+.03^2)+\sqrt{\left(\frac{\pi}{4}\right)(.1^2)\left(\frac{\pi}{4}\right)(.03)^2}\right](1)+\left(\frac{\pi}{4}\right)(.03)^2(3)+\left(\frac{\pi}{4}\right)(.03)^2(3)\right\}\hat{j}$$

$$-[301{,}325+(9{,}806)(.3)]\left(\frac{\pi}{4}\right)(.03)^2]\hat{j}$$

$$= -2597.7\hat{i} + 9{,}806[.019635+1.052]\hat{j} - 235.2\hat{j}$$

$$\therefore \quad \boxed{\vec{F}_{OUTSIDE} = -2{,}597.7\hat{i} + 31\hat{k}\ N}$$

## 2.93

Shown is a rectangular tank having a square cross section. A cubic block having dimensions 1 m × 1 m × 1 m and a specific gravity of 0.9 is inserted into the tank. What will then be the force on the door *A* from all fluids contacting it? The oil has a specific gravity of 0.65. How far below the centroid of the door is the center of pressure?

Block must float at free surface between oil and water.

**Archimedes** for block

$$(9{,}806)(.9)(1^3) = (9{,}806)(1^2)(d_2) + (9{,}806)(.65)(1^2)(d_1)$$

$$d_2 + .65d_1 = .9 \qquad (1)$$

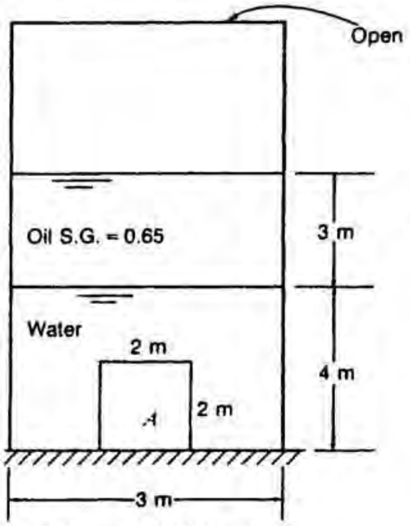


Also, $d_1 + d_2 = 1$

$$\therefore\ d_1 = 1 - d_2 \qquad (2)$$

Solve (1) and (2) simultaneously.

$$\begin{cases} d_2 = .7143 \ m \\ d_1 = .2857 \ m \end{cases}$$

<u>Rise of water</u>: $(\Delta h)_{H_2O}[3\times 3] = (1^2)(.7143)$ $\quad (\Delta h)_{H_2O} = .0794 \ m$

<u>Rise of oil</u>: $(\Delta h)_{OIL}[3\times 3] = (1^2)(.2857)$ $\quad (\Delta h)_{OIL} = .0317 \ m$

<u>Find</u> $p_c$

$$p_c = (.65)(9{,}806)(3+.0317) + (9{,}806)(4+.0794-1) = 4.952\times 10^4 \ Pa$$

<u>Hydrostatics</u>:

$$F = p_c A = (4.952\times 10^4)(4) = 198.08 \ kN$$

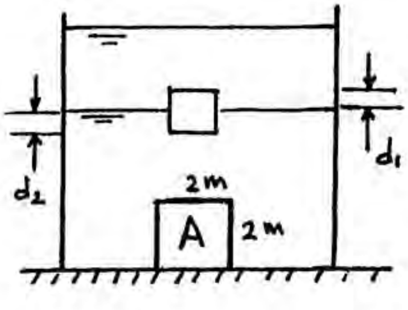


$$\therefore \boxed{F = 198.08 \ kN}$$

$$y' - y_c = \frac{(9{,}806)(1)\left(\frac{1}{12}\right)(2)(2^3)}{(4.952\times 10^4)(4)}$$

$$\boxed{y' - y_c = .066 \ m}$$

http://ingesolucionarios.blogspot.com

2.94

A pail open at the bottom and weighing 10 N is slowly made to enter the water open end first until fully submerged. At what depth will the cylinder no longer return to the free surface from buoyant forces? Explain what happens after this elevation has been exceeded. Water is at 20°C. Air is initially at 20°C. The metal thickness of the cylinder is 2 mm. Assume air compresses isothermally in the cylinder. Account for buoyancy on the metal.

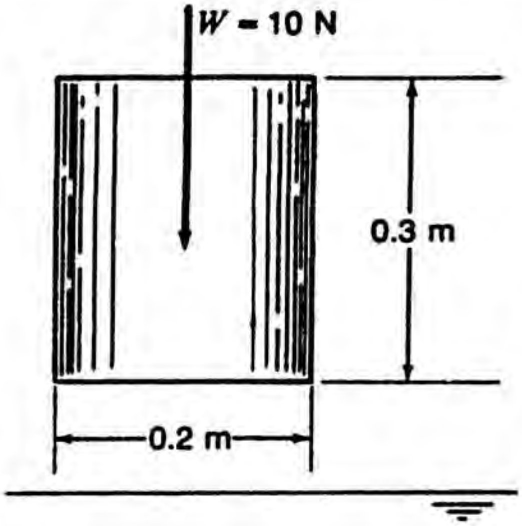


$$\begin{cases} D_{INSIDE} = (.2-.004) = 0.1960 \ m \\ D_{MEAN} = (.2-.002) = .1980 \ m \\ (HEIGHT)_{INSIDE} = (.3-.002) = .2980 \ m \end{cases}$$

At critical posiiton we have **equilibrium.** Use **Archimedes.**

$$\therefore \quad 10 = (998.2)(9.81)\left[\left(\frac{\pi}{4}\right)(.1960)^2(.2980-e)+(\pi)(.1980)(.002)(.2980)+\left(\frac{\pi}{4}\right)(.2)^2(.002)\right]$$

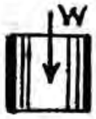


$$1.021\times10^{-3} = 9.425\times10^{-3} - 3.017\times10^{-2}e$$

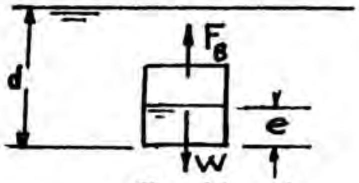


$$\therefore \quad \boxed{e = .27856}$$

Consider air: $\quad p_0V_0 = pV$

$$(101{,}325)\left(\frac{\pi}{4}\right)(.1960)^2(.2980) = p\left(\frac{\pi}{4}\right)(.1960)^2(.2980-.27856)$$

$$p = 1.5528\times10^6 \qquad (1)$$

Hydrostatics at critical state:

$$p = (998.2)(9.81)(d-.27856) + 101{,}325 \qquad (2)$$

Subst. for $p$. $\quad 1.5528\times10^6 = 9792.3(d-.27856+101{,}325)$

Solve for $d$.

$$\boxed{d = 148.5 \quad m}$$

http://ingesolucionarios.blogspot.com

2.95 **NOTE: There is no change in the volume of air.** Volume of water displaced equals volume of cylinder being submerged. Therefore no change in air pressure.

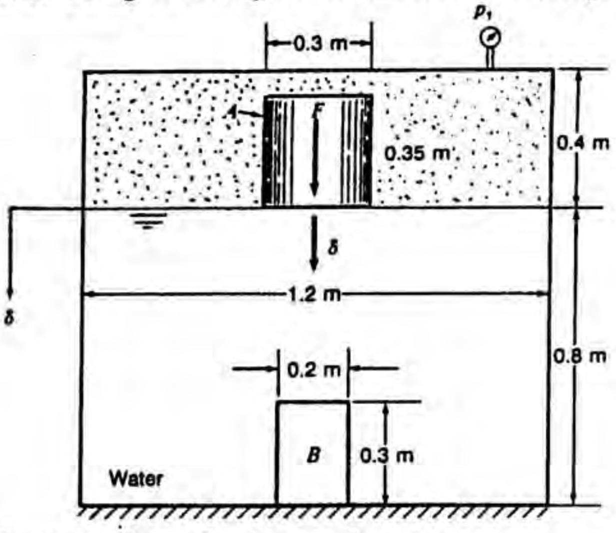


A cylindrical tank of diameter 1.2 m contains water, air, and a solid cylinder *A* which initially just touches the free surface. Find the force *F* to move the cylinder a distance δ downward into the water. Keep δ small enough so that *A* does not get completely submerged in the water. Then find the force *P* of the door *B* as a function of δ. The pressure of the air initially is $p_1$ = 200,000 Pa gage. Any change in pressure of the air during this action is adiabatic. The air temperature initially is 60°C. The water temperature is 60°C. δ is to be measured *relative to the ground* from a level of the water at initial contact between *A* and water.

<u>Find $h$</u>. <u>Conservation of volume of water</u>.

$$V_{INITIAL} = V_\delta$$

$$\frac{\pi(1.2)^2}{4}(.8) = \frac{\pi(1.2)^2}{4}(.8-\delta) + \frac{\pi}{4}(1.2^2-.3^2)(h+\delta)$$

$$0 = -1.440\delta + 1.3250\delta + 1.350h$$

$$\delta = 15h \quad OR \quad h = .0667\delta \qquad (1)$$

<u>Archimedes</u> to find $F$ on cylinder.

$$F = \frac{\pi}{4}(.3)^2(h+\delta)\gamma = \frac{\pi}{4}(.3^2)(1.0667\delta)(983.2)(9.81)$$

$$\boxed{F = 727.25\,\delta \quad N}$$

<u>Force on door</u>.

$$P = (983.2)(9.81)\left[.8 + h - \frac{.3}{2}\right](.3)(.2) + (200{,}000)(.3)(.2)$$

$$\boxed{P = 12{,}376.2 + 38.6\,\delta}$$

http://ingesolucionarios.blogspot.com

2.96

In Example 2.16 compute the metacentric height for a rotation about the symmetrical axis along its width. What is the righting couple for a 10° rotation about this axis?

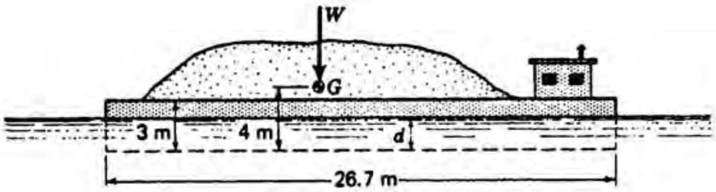


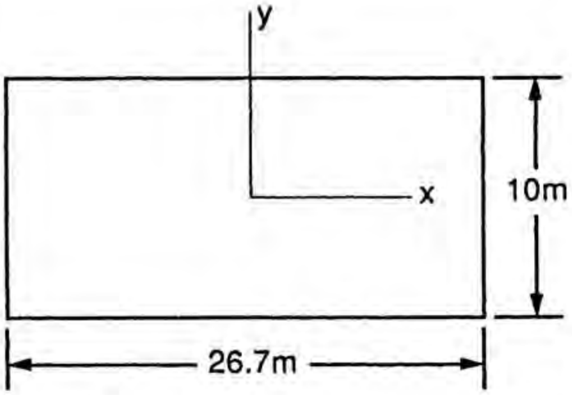


a) **Metacentric Height** $\overline{MG} = \dfrac{\gamma I_{yy}}{W} - \ell$

From example, $\ell = 3.15\ m$

$$\therefore\ \overline{MG} = \frac{(9{,}806)\left(\frac{1}{12}\right)(10)(26.7)^3}{4{,}450\times10^3} - 3.15 = 31.8\ m$$

b) **Restoring Couple** $C = \gamma\Delta\theta I_{yy} = (9{,}806)(10)\left(\dfrac{2\pi}{360}\right)\left(\dfrac{1}{12}\right)(10)(26.7)^3$

$$\boxed{C = 27{,}147\ kN\text{-}m}$$

2.97

A wooden object is placed in water. It weighs 4.5 N, and the center of gravity is 50 mm below the top surface. Is the object stable?

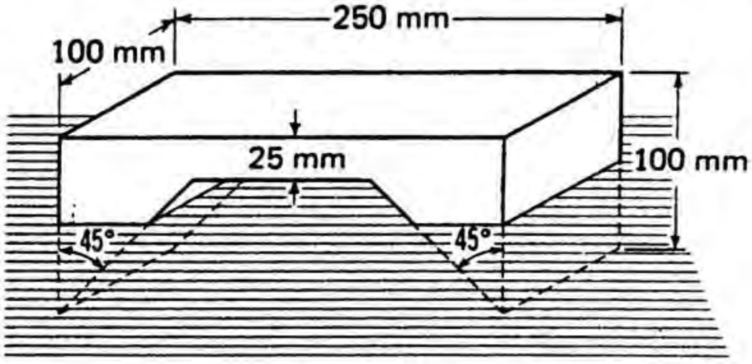


a) How far does it sink?

From Archimedes $\quad 4.5 = 2\left[\left(\frac{1}{2}\right)(h)(h)(.100)(9{,}806)\right] \qquad h = 67.7\ mm$

The area at the free surface is

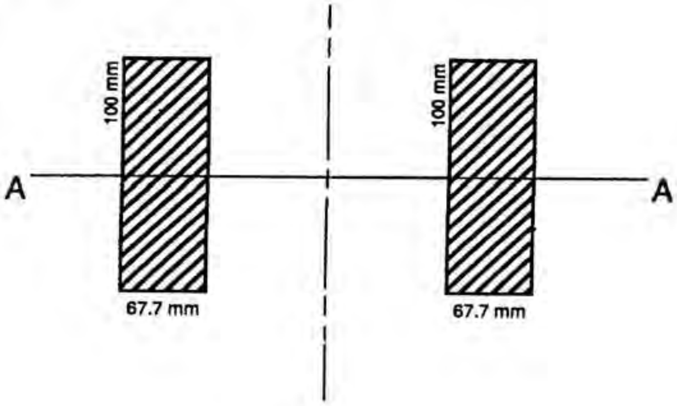


b) Find $\overline{MG}$

$$\overline{MG} = \frac{\gamma I_{yy}}{W} - \ell = \frac{(9{,}806)(2)\left(\frac{1}{12}\right)(.0677)(.100)^3}{4.5} - \ell = .0246 - \ell$$

$$\ell = \left[50 - \left(\frac{2}{3}\right)(67.7)\right] = 4.8667\,mm$$

$$\therefore\ \overline{MG} = .0246 - .0048667 = .0197\ m$$

$\therefore$ This body is stable about axis $AA$ .

http://ingesolucionarios.blogspot.com

2.98

A ship weighs 18 MN and has a cross section at the water line as shown in Fig. The center of buoyancy is 1.5 m below the free surface, and the center of gravity is 600 mm above the free surface. Compute the metacentric heights for the $x$ and $y$ axes. Also determine the metacentric height for axis $AA$ at an angle of 30° as shown.

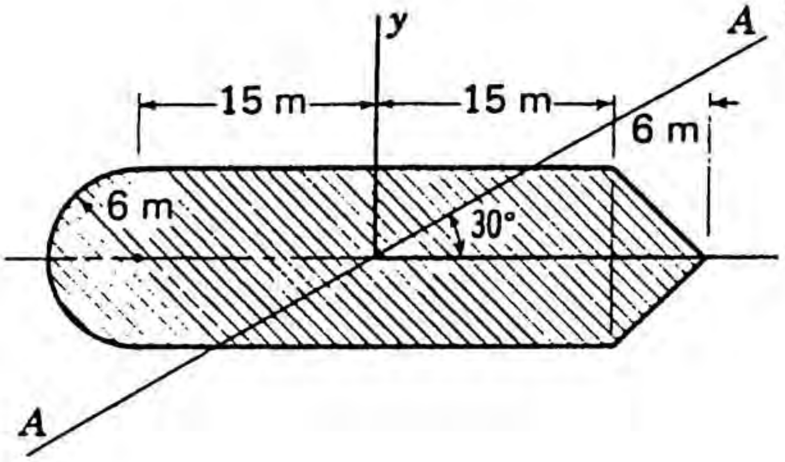


$$(\overline{MC})_x = \frac{\gamma I_{xx}}{W} - \ell$$

$$= \left(\frac{9{,}806}{18\times10^6}\right)\left[\left(\frac{1}{12}\right)(30)(12^3) + \left(\frac{1}{2}\right)\frac{(\pi)(6^4)}{4} + (2)\left(\frac{1}{12}\right)(6)(6^3)\right] - (1.5+.6)$$

$$= 2.748 - 2.10 = .648\,m$$

$$(\overline{MC})_y = \left(\frac{9{,}806}{18\times10^6}\right)\left\{\left(\frac{1}{12}\right)(12)(30^3) + (.1098)(6^4) + \left(\frac{1}{2}\right)(\pi)(6^2)[15+(.424)(6)]^2 + \right.$$

$$\left. \frac{(12)(6)^3}{36} + (2)\left(\frac{1}{2}\right)(6)(6)\left[15+\frac{6}{3}\right]^2\right\} - 2.10 = 27.88\ m$$

$$(\overline{MC})_{AA} = \left(\frac{9{,}806}{18\times10^6}\right)\left[I_{xx}m^2 + I_{yy}n^2\right] - \ell$$

$$= \left(\frac{9{,}806}{18\times10^6}\right)\left[(5{,}045)(.866)^2 + (55{,}024)(.5)^2\right] - 2.10 = 7.455\ m$$

2.99

A wooden cylinder of length 2 ft and diameter 1 in and specific weight 20 lb/ft$^3$ is fastened to a cylinder of metal having a diameter of $\frac{1}{2}$ in, length of 1 ft, and specific weight of 200 lb/ft$^3$. Is this object stable in water for the orientation shown in Fig.

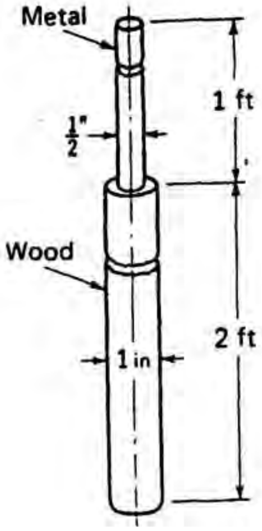


a) Weight of object:

$$W = \frac{(\pi)\left(\frac{1}{12}\right)^2}{4}(2)(20) + \frac{(\pi)\left(\frac{1}{24}\right)^2}{4}(1)(200) = .218 + .273 = .491\ lb$$

b) Find $h$ from **Archimedes.**

$$(.491) = (62.4)(h)\frac{(\pi)\left(\frac{1}{12}\right)^2}{4} \qquad h = \frac{(.491)(4)(144)}{(62.4)(\pi)} = 1.442\ ft$$

c) Find $C$ of $G$ of rod (needed for $\ell$). Take moments about $A$.

$$(200)(1)\left[\frac{(\pi)\left(\frac{1}{24}\right)^2}{4}\right](2.5) + (20)(2)\left[\frac{(\pi)\left(\frac{1}{12}\right)^2}{4}\right](1) = .491y_c$$

$$y_c = 1.833ft$$

$$\overline{MC} = \left(\frac{62.4}{.491}\right)\frac{(\pi)\left(\frac{1}{24}\right)^4}{4} - \ell = .3008\times10^{-3} - \ell$$

$$\ell = 1.833 - \frac{1.442}{2} = 1.112ft$$

Hence: $\overline{MC} = .3008\times10^{-3} - 1.112 = -1.112\ ft$

∴ It is **unstable.**

http://ingesolucionarios.blogspot.com

2.100

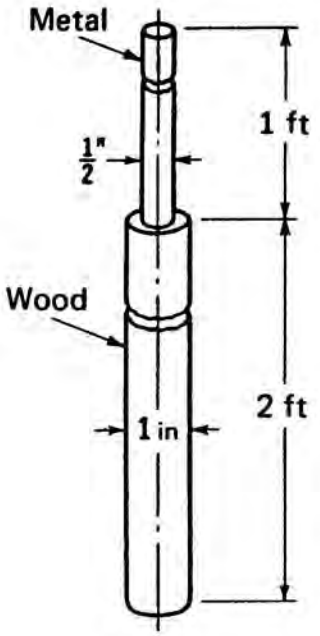


$$I_{xx} = \left(\frac{\pi}{4}\right)\left(\frac{1}{24}\right)^4 = 2.37\times10^{-6}$$

For neutral stability $(M_c)_x = 0$ $\qquad \therefore \quad \dfrac{(62.4)(S)(2.37\times10^{-6})}{.491} = \ell$ $\qquad$ (a)

Archimedes $\qquad W = .491 = [(62.4)(S)]h\,\dfrac{(\pi)\left(\frac{1}{12}\right)^2}{4}$

$$h = \frac{1.443}{S} \qquad \therefore \quad \ell = 1.883 - \frac{1.443}{2S} \qquad \text{(b)}$$

Substitute from (b) into (a). $\qquad 3.01\times10^{-4}S = 1.883 - \dfrac{1.443}{2S}$

$$S^2 - 6.25\times10^3 S + 2.395\times10^3 = 0$$

$$S = \frac{6.25\times10^3 \pm\sqrt{(6.25\times10^3)^2-(4)(2.395\times10^3)}}{2}$$

**$S = .3832$**

http://ingesolucionarios.blogspot.com

2.101

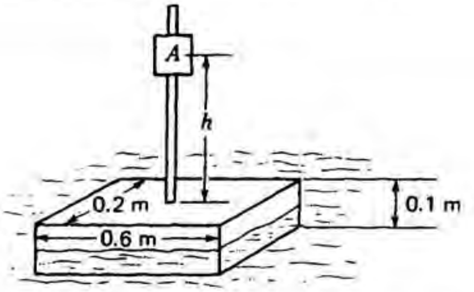


A wooden block having a specific gravity of 0.7 is floating in water. A light rod at the center of the block supports a cylinder *A* whose weight is 20 N. At what height *h* will there be neutral stability?

We will first compute $C$. The depth $d$ of submergence of the block in water is found from Archimedes principle and equilibrium.

$$[(.6)(.2)(d)][9{,}806] = [(.6)(.2)(.1)(.7)(9{,}806)] + 20$$

$$d = .0870\ m$$

The height $\bar{y}$ of $CG$ above bottom of block is next computed.

$$[(.7)(9{,}806)(.6)(.2)(.1)](.05) + (20)(h+.1) = [(.7)(9{,}806)(.6)(.1)(.2) + 20]\bar{y}$$

$$6.1185 + 20h = 102.4\bar{y}$$

$$\bar{y} = 9.77\times10^{-3}[6.1185+20h]$$

Hence $$\ell = \bar{y} - \frac{d}{2} = 9.77\times10^{-3}[6.1185+20h] - \frac{.0870}{2}$$

We can now compute $\overline{MG}$, the metacentric height. Letting it equal to zero for neutral stability, we have:

$$0 = \frac{\gamma I_{yy}}{W} - \ell$$

$$0 = \frac{(9{,}806)\left(\frac{1}{12}\right)(.6)(.2)^3}{(.7)(9{,}806)(.6)(.2)(.1)+20} - 9.77\times10^{-3}[6.1185+20h] + \frac{.0870}{2}$$

$$0 = .0383 - 9.77\times10^{-3}[6.1185+20h] + \frac{.0870}{2}$$

$$\boxed{h = .1127\ m}$$

http://ingesolucionarios.blogspot.com

# CHAPTER 3

http://ingesolucionarios.blogspot.com Edu_Zegarr_ch

http://ingesolucionarios.blogspot.com

A flow field is given as

$$\mathbf{V} = 6x\mathbf{i} + 6y\mathbf{j} - 7t\mathbf{k} \quad m/s$$

What is the velocity at position $x = 10$ m and $y = 6$ m when $t = 10$ s? What is the slope of the streamlines for this flow at $t = 0$ s? What is the equation of the streamlines at $t = 0$ up to an arbitrary constant? Finally, sketch streamlines at $t = 0$.

**3.1** a) $\vec{V} = 6x\hat{i} + 6y\hat{j} - 7t\hat{k}$

At $x=10$ , $y=6$ , $t=10$ we get: $\vec{V} = 60\hat{i} + 36\hat{j} - 70\hat{k}$

b) At $t=0$ $\qquad \vec{V} = 6x\hat{i} + 6y\hat{j}$

$\therefore$ slope of streamline is $\dfrac{y}{x}$ . (1)

Hence $\qquad \left(\dfrac{dy}{dx}\right)_{str} = \dfrac{y}{x} \qquad \dfrac{dy}{y} = \dfrac{dx}{x}$

$$\therefore \ \ln y = \ln x + \ln C$$

where $C$ is an arbitrary constant. $\qquad y = Cx$

The streamlines are straight lines. However, this can be deduced from statement (1) and using graph paper.

We will later learn that the two-dimensional flow around an infinite stationary cylinder is given as follows, using cylindrical coordinates:

$$V_r = V_0 \cos\theta - \frac{\chi \cos\theta}{r^2}$$

$$V_\theta = -V_0 \sin\theta - \frac{\chi \sin\theta}{r^2}$$

where $V_0$ and $\chi$ are constants. (Note that there is no flow in the $z$ direction.) What is the slope $(dy/dx)$ of a streamline at $r = 2$ m and $\theta = 30°$? Take $V_0 = 5$ m/s and $\chi = \frac{5}{4}$ m³/s. Show that at $r = \sqrt{\chi/V_0}$ (i.e., on the boundary of the cylinder) the streamline must be tangent to the cylinder wall. *Hint*: What does this imply about normal component $V_N$ at the boundary?

**3.2** a) $$\left(\frac{dy}{dx}\right)_{str} = \frac{V_r \sin\theta + V_\theta \cos\theta}{-V_\theta \sin\theta + V_r \cos\theta}$$

Compute $V_r$ and $V_\theta$ at position of interest.

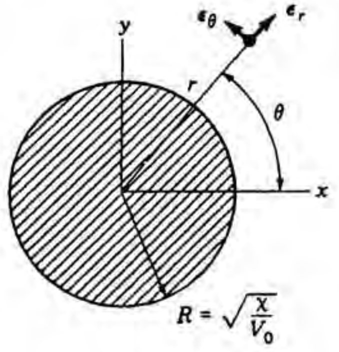


$$V_r = (5)(.866) - \frac{\left(\frac{5}{4}\right)(.866)}{4} = 4.059 \ m/sec$$

$$V_\theta = -(5)(.5) - \frac{\left(\frac{5}{4}\right)(.5)}{4} = -2.656 \ m/sec$$

$$\left(\frac{dy}{dx}\right)_{str} = \frac{(4.059)(.5)-(2.656)(.866)}{(2.656)(.5)+(4.059)(.866)} = -.0559$$

b) Let $r = \sqrt{\dfrac{\chi}{V_o}} = R$ $\qquad$ Compute $V_r$ at wall.

$$V_r = V_o\cos\theta - \frac{\chi\cos\theta}{R^2} = V_o\cos\theta - \frac{\chi\cos\theta}{\left(\frac{\chi}{V_o}\right)} = 0$$

Since $V_r = 0$ , then streamline must be tangent to wall.

http://ingesolucionarios.blogspot.com

## 3.3

Given the following *unsteady*-flow field,

$$\mathbf{V} = 3(x-2t)(y-3t)^2\mathbf{i} + (6+z+4t)\mathbf{j} + 25\mathbf{k} \text{ ft/s}$$

can you specify by inspection a reference $x'y'z'$ moving at constant speed relative to $xyz$ so that $\mathbf{V}$ relative to $x'y'z'$ is *steady*? What is $\mathbf{V}$ for this reference? What is the speed of translation of $x'y'z'$ relative to $xyz$? *Hint*: For the last step, imagine a point fixed in $x'y'z'$. How must $x'y'z'$ then move relative to $xyz$ to get correct relations between $x'$ and $x$, $y'$ and $y$, and $z'$ and $z$?

To get steady flow let:

$$x' = (x-2t)$$

$$y' = (y-3t)$$

$$z' = (z+4t)$$

Then $\quad \vec{V}(x'y'z') = 3x'(y')^2\hat{i} + [6+z']\hat{j} + 25\hat{k}$

Note: $\quad x = x'+2t \quad , \quad y = y'+3t \;, \quad z = z'-4t$

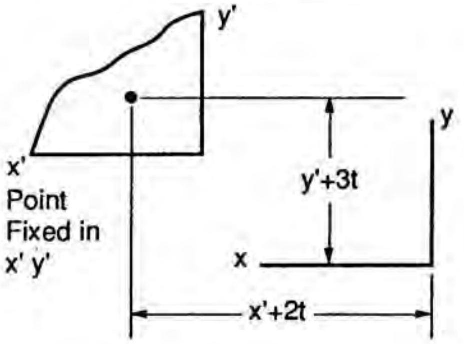


$\therefore$ $x'y'$ moving left at a speed of $2\hat{i}$ *ft*/sec and $3\hat{j}$ *ft*/sec upward. Similarly, $x'y'z'$ is moving with speed $-4\hat{k}$ *ft*/sec (i.e., toward $xyz$). Thus

$$\left(\vec{V}_{x'y'z'}\right)_{xyz} = 2\hat{i} + 3\hat{j} - 4\hat{k} \text{ ft/sec}$$

## 3.4

Using data from Prob. 3.1, determine the acceleration field for the flow. What is the acceleration of the particle at the position and time designated in Prob. 4.1?

$$\vec{a} = V_x \frac{\partial \vec{V}}{\partial x} + V_y \frac{\partial \vec{V}}{\partial y} + V_z \frac{\partial \vec{V}}{\partial z} + \frac{\partial \vec{V}}{\partial t}$$

For problem at hand:

$$\vec{a} = (6x)(6)\hat{i} + (6y)(6)\hat{j} - 7\hat{k} = 36x\hat{i} + 36y\hat{j} - 7\hat{k}$$

@ $x=10$ , $y=6$ , $t=10$ , we have:

$$\boxed{\vec{a} = 360\hat{i} + 216\hat{j} - 7\hat{k} \text{ m/sec}^2}$$

http://ingesolucionarios.blogspot.com Edu_Zegarr_ch 

http://ingesolucionarios.blogspot.com

3.5

Given the velocity field

$$\mathbf{V} = 10\mathbf{i} + (x^2 + y^2)\mathbf{j} - 2yx\mathbf{k} \quad \text{ft/s}$$

what is the acceleration of a particle at position (3, 1, 0) ft?

$$\vec{V} = 10\hat{i} + (x^2+y^2)\hat{j} - 2yx\hat{k} \ ft/sec$$

$$\vec{a} = V_x \frac{\partial \vec{V}}{\partial x} + V_y \frac{\partial \vec{V}}{\partial y} + V_z \frac{\partial \vec{V}}{\partial z} + \frac{\partial \vec{V}}{\partial t}$$

$$\vec{a} = (10)(2x\hat{j}-2y\hat{k})+(x^2+y^2)(2y\hat{j}-2x\hat{k})$$

$$\vec{a} = (20x+2yx^2+2y^3)\hat{j} - (20y+2xy^2+2x^3)\hat{k}$$

at (3,1,0) we have: $\vec{a} = (60+18+2)\hat{j} - (20+6+54)\hat{k}$

$$\boxed{\vec{a} = 80\hat{j} - 80\hat{k} \ ft/sec^2}$$

3.6

Given the velocity field

$$\mathbf{V} = (6 + 2xy + t^2)\mathbf{i} - (xy^2 + 10t)\mathbf{j} + 25\mathbf{k} \quad \text{m/s}$$

what is the acceleration of a particle at (3, 0, 2) m at time $t = 1$ s?

$$\vec{V} = (6+2xy+t^2)\hat{i} - (xy^2+10t)\hat{j} + 25\hat{k} \ m/s$$

$$\vec{a} = V_x \frac{\partial \vec{V}}{\partial x} + V_y \frac{\partial \vec{V}}{\partial y} + V_z \frac{\partial \vec{V}}{\partial z} + \frac{\partial \vec{V}}{\partial t}$$

$$\vec{a} = (6+2xy+t^2)(2y\hat{i}-y^2\hat{j}) - (xy^2+10t)(2x\hat{i}-2xy\hat{j}) + (25)(\vec{0}) + 2t\hat{i} - 10\hat{j}$$

At position (3,0,2) at $t$=1 we have:

$$\vec{a} = (6+1)(0) - (10)(6\hat{i}) + 2\hat{i} - 10\hat{j}$$

$$\boxed{\vec{a} = -58\hat{i} - 10\hat{j} \ m/sec^2}$$

http://ingesolucionarios.blogspot.com

## 3.7

A flow of charged particles (a plasma) is moving through an electric field **E** given as

$$\mathbf{E} = (x^2 + 3t)\mathbf{i} + yz^2\mathbf{j} + (x^2 + z^2)\mathbf{k} \quad N/C$$

The velocity field of the particles is given as

$$\mathbf{V} = 10x^2\mathbf{i} + (5t + \sqrt{y})\mathbf{j} + t^3\mathbf{k} \quad m/s$$

If the charge per particle is $10^{-5}$ C, what is the time rate of change of force on any one particle as it moves through the field?

$$\vec{F} = q\vec{E} = 10^{-5}[(x^3+3t)\hat{i} + yz^2\hat{j} + (x^2+z^2)\hat{k}] \quad N$$

$$\frac{D\vec{F}}{Dt} = \left(V_x\frac{\partial \vec{F}}{\partial x} + V_y\frac{\partial \vec{F}}{\partial y} + V_z\frac{\partial \vec{F}}{\partial z}\right) + \frac{\partial \vec{F}}{\partial t}$$

$$= (10x^2)(10^{-5})(2x\hat{i} + 2x\hat{k}) + (5t + \sqrt{y})(10^{-5})(z^2\hat{j}) + (t^3)(10^{-5})(2yz\,\hat{j} + 2z\,\hat{k}) + (10^{-5})(3\hat{i})$$

$$= 10^{-5}\,\{(20x^3+3)\hat{i} + [(5t + \sqrt{y})z^2 + (t^3)(2yz)]\hat{j} + (20x^3 + 2t^3z)\hat{k}\,\} \quad N/s$$

## 3.8

The force **F** on a particle with electric charge $q$ moving through a magnetic field **B** is given as

$$\mathbf{F} = q\mathbf{V} \times \mathbf{B}$$

Consider a flow of charged particles moving through a magnetic field **B** given as

$$\mathbf{B} = (10 + t^2)\mathbf{i} + (z^2 + y^2)\mathbf{k} \quad W/m^2$$

where the velocity field is given as

$$\mathbf{V} = (20x + t^2)\mathbf{i} + (18 + zy)\mathbf{j} \quad m/s$$

What is the time rate of change of **F** for a flow particle with charge $10^{-5}$ C? Do not take time to multiply out terms in final computation.

$$\vec{F} = 10^{-5}\,\vec{V} \times \vec{B}$$

$$= 10^{-5}[(20x + t^2)\hat{i} + (18 + zy)\hat{j}\,] \times [(10 + t^2)\hat{i} + (z^2 + y^2)\hat{k}]$$

$$= 10^{-5}[-(20x + t^2)(z^2 + y^2)\hat{j} - (18 + zy)(10 + t^2)\hat{k} + (18 + zy)(z^2 + y^2)\hat{i}\,]$$

$$\frac{D\vec{F}}{Dt} = V_x\frac{\partial \vec{F}}{\partial x} + V_y\frac{\partial \vec{F}}{\partial y} + V_z\frac{\partial \vec{F}}{\partial z} + \frac{\partial \vec{F}}{\partial t}$$

$$\frac{D\vec{F}}{Dt} = 10^{-5}\{-[20x + t^2][z^2 + y^2](20)\hat{j} + [18 + zy]\{-(10 + t^2)(z)\hat{k}$$

$$- (20x + t^2)(2y)\hat{j} + [(z^2+y^2)(z) + (18 + zy)(2y)]\hat{i}\,\}$$

$$- [(18 + zy)(2t)]\hat{k} - [(z^2+y^2)(2t)\hat{j}\,]\}$$

$$\frac{D\vec{F}}{Dt} = 10^{-5}\{(18 + zy)[(z^2 + y^2)(z) + (18 + zy)(2y)]\hat{i} - [(20)(z^2 + y^2)(20x + t^2)$$

$$+ (18 + zy)(2y)(20x + t^2) + (2t)(z^2+y^2)]\hat{j}$$

$$- [(18 + zy)(2t) + (z)(18 + zy)(10 + t^2)]\hat{k}\,\} \quad N/s$$

http://ingesolucionarios.blogspot.com

3.9

a) Substitute $x=5$ , $y=10$ into the equation. We then get

$$25 + 100 - \left(\frac{\chi}{C}\right)(10) = 0$$

The equation for streamlines corresponding to a two-dimensional doublet (to be studied in Chap. 11) is given in meters as

$$x^2 + y^2 - \frac{\chi}{C}y = 0 \qquad (a)$$

where $\chi$ is a constant for the flow and $C$ is a constant for a streamline. What is the direction of the velocity of a particle at position $x = 5$ m and $y = 10$ m? If $V_x = 5$ m/s, what is $V_y$ at the point of interest?

$$\therefore \quad C = \frac{\chi}{12.5}$$

for streamline of interest. Now find $\left(\frac{dy}{dx}\right)_{str}$ for any streamline. Differentiate Eq. (1). We get

$$2x\,dx + 2y\,dy - \left(\frac{\chi}{C}\right)dy = 0$$

$$\therefore \quad \left(\frac{dy}{dx}\right)_{str} = \left[\frac{2x}{-2y + \frac{\chi}{C}}\right]$$

At position of interest:

$$\left(\frac{dy}{dx}\right)_{str} = \frac{(2)(5)}{-(2)(10) + \frac{\chi}{\left(\frac{\chi}{12.5}\right)}} = -1.333$$

$\therefore$ slope is $-53.1°$

b) $$\frac{V_y}{V_x} = \left(\frac{dy}{dx}\right)_{str} = -1.333$$

$$V_y = (5)(-1.333) = -6.67 \ m/\text{sec}$$

3.10

a) For any value of $y$ there are two values of $x$ having the same magnitude but different signs. Hence, centers must lie along $y$ axis.

b) Let $x=y=0$ . Clearly Eq. (1) of Problem 4.7 is satisfied. Hence all circles go through origin.

http://ingesolucionarios.blogspot.com Edu_Zegarr_ch

http://ingesolucionarios.blogspot.com

(cont.)

c)

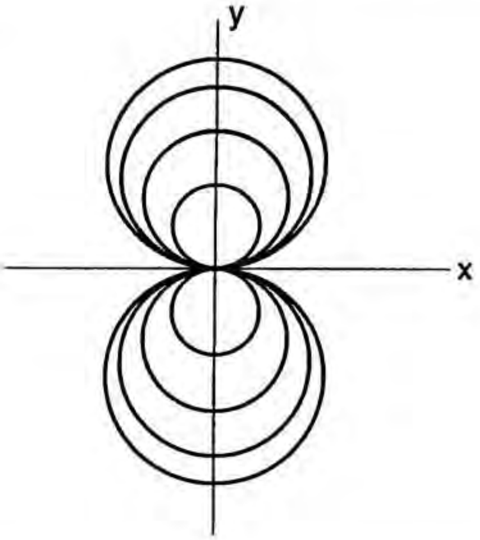


3.11

The family of streamlines is given by: $xy = K$

At position (2,4) we have $K=8$ and the equation of the streamline through this point is

$$xy = 8$$

The radius of curvature is:

In Example 3.1 what is the equation of the streamline passing through position $x = 2$, $y = 4$? Remembering that the radius of curvature of a curve is

$$R = \frac{\left[1 + (dy/dx)^2\right]^{3/2}}{|d^2y/dx^2|}$$

determine the acceleration of a particle in a direction normal to the streamline and toward the center of curvature at the aforementioned position.

$$R = \frac{\left[1 + \left(\frac{dy}{dx}\right)^2\right]^{3/2}}{\left|\frac{d^2y}{dx^2}\right|} \qquad \begin{cases} \frac{dy}{dy} = -\frac{8}{x^2} \\ \frac{d^2y}{dx^2} = \frac{16}{x^3} \end{cases}$$

At position of interest: $\frac{dy}{dx} = -\frac{8}{4} = -2 \qquad \frac{d^2y}{dx^2} = \frac{16}{8} = 2$

$$R = \frac{(1+4)^{3/2}}{2} = \frac{5^{3/2}}{2} = 5.59$$

The acceleration component desired is: $\frac{V^2}{R}$

$$a_N = \frac{V_x^2 + V_y^2}{5.59} = \frac{4A^2 + 16A^2}{5.59} = \boxed{3.58A^2}$$

http://ingesolucionarios.blogspot.com Edu_Zegarr_ch

3.12

We are given the following family of curves representing streamlines for a two-dimensional source (Chap. 11)

$$y = Cx \qquad (1)$$

where $C$ is a constant for each streamline. Also we know that

$$|\mathbf{V}| = \frac{K}{\sqrt{x^2+y^2}} \qquad (2)$$

where $K$ is a constant for the flow. What is the velocity field $\mathbf{V}(x, y, z)$ for the flow? That is, show that

$$V_x = \frac{Kx}{x^2+y^2} \qquad V_y = \frac{Ky}{x^2+y^2}$$

*Suggestion*: Start by showing that

$$|\mathbf{V}| = V_x\sqrt{1+\left(\frac{V_y}{V_x}\right)^2} \quad \text{and} \quad \frac{V_y}{V_x} = C = \frac{y}{x}$$

From Pythagorean theorem: $$|\vec{V}| = \sqrt{V_x^2+V_y^2} = V_x\sqrt{1+\left(\frac{V_y}{V_x}\right)^2} \qquad (a)$$

Also from the definition of the streamline: $$\left(\frac{dy}{dx}\right)_{str} = \frac{V_y}{V_x} = C \qquad (b)$$

where the last step comes from differentiating Eq. (1). Substitute (b) into (a).

$$|\vec{V}| = V_x\sqrt{1+C^2}$$

Replace left side by (2) and solve for $V_x$.

$$\frac{K}{\sqrt{x^2+y^2}} = V_x\sqrt{1+C^2} \qquad \therefore \; V_x = \frac{K}{\sqrt{x^2+y^2}\sqrt{1+C^2}}$$

Replace $C$ by $\frac{y}{x}$ from Eq. (1).

$$V_x = \frac{K}{\sqrt{x^2+y^2}\sqrt{1+\frac{y^2}{x^2}}} = \frac{Kx}{x^2+y^2}$$

From Eq. (b), $V_y = CV_x$

$$V_y = C\left(\frac{Kx}{x^2+y^2}\right)$$

But $C_x = y$ . Hence:

$$V_y = \frac{Ky}{x^2+y^2}$$

http://ingesolucionarios.blogspot.com

3.13

A *path line* is the curve traversed by any one particle in the flow and corresponds to the *trajectory* as employed in your earlier course in particle mechanics. Given the velocity field

$$\mathbf{V} = (6x)\mathbf{i} + (16y + 10)\mathbf{j} + (20t^2)\mathbf{k} \quad \text{m/s}$$

what is the path line of a particle which is at (2, 4, 6) m at time $t = 2$ s? *Suggestion:* Form $dx/dt$, $dy/dt$, and $dz/dt$. Integrate: solve for constants of integration; then eliminate the time $t$ to relate $xyz$ in a single equation.

$$V_x = \frac{dx}{dt} = 6x \qquad (a)$$

$$V_y = \frac{dy}{dy} = 16y + 10 \qquad (b)$$

$$V_z = \frac{dz}{dt} = 20t^2 \qquad (c)$$

From (a): $\frac{dx}{x} = 6\,dt \qquad \ln x = 6t + C_1$

Find $C_1$. At $t=2$, $x=2$. $\qquad \ln 2 = 12 + C_1 \qquad C_1 = -11.31$

$$\therefore \ln x = 6t - 11.31 \qquad (1)$$

From (b): $\frac{dy}{dt} = 16y + 10 \qquad \frac{dy}{16y+10} = dt$

$$\ln(16y+10) = 16t + C_2$$

Find $C_2$. At $t=2$, $y=4$ $\qquad \ln(64+10) = (16)(2) + C_2 \qquad C_2 = -27.7$

$$\therefore \ln(16y+10) = 16t - 27.7 \qquad (2)$$

From (c): $\frac{dz}{dt} = 20t^2 \qquad z = \frac{20t^3}{3} + C_3$

Find $C_3$. At $t=2$, $z=6$. $\qquad 6 = \left(\frac{20}{3}\right)(8) + C_3 \qquad C_3 = -47.3$

$$\therefore z = \left(\frac{20}{3}\right)t^3 - 47.3 \qquad (3)$$

Add Eqs. (1) and (2) to get: $\qquad \ln x + \ln(16y + 10) = 22t - 39.0$

Solve for $t$ in Eq. (3). $\qquad t = \left[(z+47.3)\left(\frac{3}{20}\right)\right]^{1/3}$

Substitute into (4). $\qquad \ln(x)(16y+10) = (22)\left(\frac{3}{20}\right)^{1/3}[z+47.3]^{1/3} - 39$

$$\therefore \ln x(16y+10) = (11.69)[z+47.3]^{1/3} - 39$$

http://ingesolucionarios.blogspot.com

3.14 First compute $\vec{a}(x,y,z)$

$$\vec{a} = V_x \frac{\partial \vec{V}}{\partial x} + V_y \frac{\partial \vec{V}}{\partial y} + V_z \frac{\partial \vec{V}}{\partial z} + \frac{\partial \vec{V}}{\partial t}$$

$$\vec{a} = (10x)(10\hat{i}+30y\hat{j}+6xz\hat{k}) + (30xy)(30x\hat{j}) + (3x^2z+10)(3x^2\hat{k})$$

We want $\vec{a}$ at $\vec{\rho} = 3\hat{i} + 3\hat{k}$. $\therefore$ $x=3$ , $y=0$ , $z=3$

$$\vec{a} = (30)(10\hat{i}+54\hat{k}) + (91)(27)\hat{k} = 300\hat{i} + 1{,}620\hat{k} + 2{,}457\hat{k} = 300\hat{i} + 4{,}077\hat{k}\ m/\text{sec}^2$$

Now we employ the relation:

$$a_{XYZ} = a_{xyz} + \ddot{R} + 2\omega \times V_{xyz} + \dot{\omega} \times \rho + \omega \times (\omega \times \rho)$$

where $a_{xyz}$ and $V_{xyz}$ are taken relative to $xyz$.

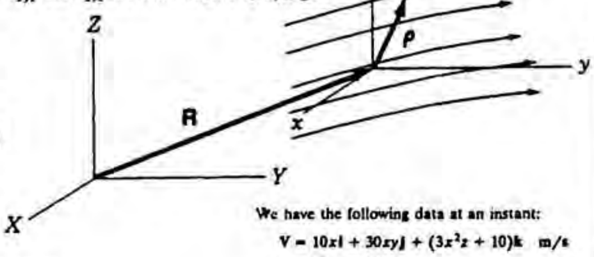


$$\vec{a}_{XYZ} = \vec{a}_{xyz} + \ddot{\vec{R}} + 2\vec{\omega}\times\vec{V}_{xyz} + \dot{\vec{\omega}}\times\vec{\rho} + \vec{\omega}\times(\vec{\omega}\times\vec{\rho})$$

$$\vec{a}_{XYZ} = 300\hat{i} + 4{,}077\hat{k} + 16\hat{k} + 2(10\hat{i})\times(30\hat{i}+91\hat{k})$$

$$+ 5\hat{k}\times(3\hat{i}+3\hat{k}) + 10\hat{i}\times[10\hat{i}\times(3\hat{i}+3\hat{k})]$$

$$\vec{a}_{XYZ} = 300\hat{i} + 4{,}077\hat{k} + 16\hat{k} - 1{,}820\hat{j} + 15\hat{j} - 300\hat{k}$$

$$\boxed{\vec{a}_{XYZ} = 300\hat{i} - 1{,}805\hat{j} + 3{,}793\hat{k}\quad m/\text{sec}}$$

We have the following data at an instant:

$V = 10x\mathbf{i} + 30xy\mathbf{j} + (3x^2z + 10)\mathbf{k}$ m/s

$\omega = 10\mathbf{i}$ rad/s

$\dot{R} = 6$ m/s

$\ddot{R} = 16\mathbf{k}$ m/s²

$\dot{\omega} = 5\mathbf{k}$ rad/s²

What is the acceleration relative to $xyz$ and $XYZ$, respectively, of a particle at

$\rho = 3\mathbf{i} + 3\mathbf{k}$ m

at the instant of interest?

3.15 On the boundary, clearly $V_r = 0$ . $\therefore$ For flow along the boundary:

$$\vec{V} = \left[V_o \sin\theta + \frac{a^2}{a^2} V_o \sin\theta\right]\hat{e}_\theta = 2V_o \sin\theta\ \hat{e}_\theta$$

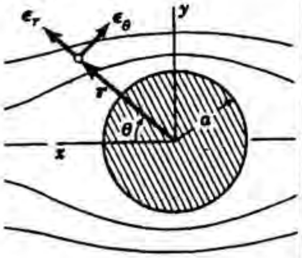


Using streamline coordinates: $\vec{a} = V\dfrac{\partial \vec{V}}{\partial s} = V\dfrac{\partial \vec{V}}{a\partial\theta}$

The **tangential** component is: $a_T = \dfrac{V}{a}\dfrac{\partial V}{\partial\theta} = \dfrac{2V_o\sin\theta}{a}(2V_o\cos\theta) = \dfrac{4V_o^2}{a}\sin\theta\ \cos\theta$

For the **normal** component: $a_N = \dfrac{V^2}{R} = \dfrac{4V_o^2\sin^2\theta}{a}$

Consider a steady two-dimensional inviscid flow about a cylinder of radius $a$. Using cylindrical coordinates, we can express the velocity field of a nonviscous incompressible flow in the following manner,

$$V(r,\theta) = -\left(V_0\cos\theta - \frac{a^2V_0}{r^2}\cos\theta\right)\epsilon_r + \left(V_0\sin\theta + \frac{a^2V_0}{r^2}\sin\theta\right)\epsilon_\theta$$

where $V_0$ is a constant and $\epsilon_r$ and $\epsilon_\theta$ are unit vectors in the radial and transverse directions,

$$\therefore\ \vec{a} = \frac{4V_o^2}{a}\sin\theta\ \cos\theta\ \hat{e}_\theta - \frac{4V_o^2\sin^2\theta}{a}\hat{e}_r$$

At position $\theta=\theta_o$ we get:

$$\boxed{\vec{a} = \frac{4V_o^2}{a}\sin\theta_o\cos\theta_o\hat{e}_\theta - \frac{4V_o^2\sin^2\theta_o}{a}\hat{e}_r}$$

http://ingesolucionarios.blogspot.com

3.16

Given the following velocity field

$\mathbf{V} = 10x^2y\mathbf{i} + 20(yz + x)\mathbf{j} + 13\mathbf{k}$ m/s

what is the strain rate tensor at (6, 1, 2) m.

$$\frac{\partial V_x}{\partial x} = 20xy \qquad \frac{\partial V_y}{\partial y} = 20z \qquad \frac{\partial V_z}{\partial z} = 0$$

$$\therefore \quad \frac{1}{2}\left(\frac{\partial V_x}{\partial y} + \frac{\partial V_y}{\partial x}\right) = \frac{1}{2}(10x^2+20)$$

$$\frac{1}{2}\left(\frac{\partial V_x}{\partial z} + \frac{\partial V_z}{\partial x}\right) = \frac{1}{2}(0+0)$$

$$\frac{1}{2}\left(\frac{\partial V_y}{\partial z} + \frac{\partial V_z}{\partial y}\right) = \frac{1}{2}(20y+0)$$

$\therefore$ The strain rate tensor is:

$$\dot{\epsilon}_{ij} = \begin{pmatrix} 20xy & 5x^2+10 & 0 \\ 5x^2+10 & 20z & 10y \\ 0 & 10y & 0 \end{pmatrix}$$

At (6,1,2) we have

$$(\dot{\epsilon}_{ij}) = \begin{pmatrix} 120 & 190 & 0 \\ 190 & 40 & 10 \\ 0 & 10 & 0 \end{pmatrix}$$

3.17

In Prob. 3.17, what is the total angular velocity of a fluid particle at (1, 4, 3) m?

$$\omega_x = \frac{1}{2}\left(\frac{\partial V_z}{\partial y} - \frac{\partial V_y}{\partial z}\right) = \frac{1}{2}(0-20y) = -10y$$

$$\omega_y = \frac{1}{2}\left(\frac{\partial V_x}{\partial z} - \frac{\partial V_z}{\partial x}\right) = \frac{1}{2}(0-0) = 0$$

$$\omega_z = \frac{1}{2}\left(\frac{\partial V_y}{\partial x} - \frac{\partial V_x}{\partial y}\right) = \frac{1}{2}(20-10x^2) = 10-5x^2$$

$$\vec{\omega} = -40\hat{i} + (10-5)\hat{k} \ rad/\text{sec}$$

$$\omega = \sqrt{40^2+5^2} = \boxed{40.31 \quad rad/\text{sec}}$$

http://ingesolucionarios.blogspot.com

http://ingesolucionarios.blogspot.com

3.18

Given the velocity field

$$\mathbf{V} = 5x^2y\mathbf{i} - (3x - 3z)\mathbf{j} + 10z^2\mathbf{k} \quad \text{m/s}$$

compute the angular velocity field $\omega(x, y, z)$.

$$\vec{\omega} = \frac{1}{2}(curl\ \vec{V}) = \frac{1}{2}\left[\left(\frac{\partial V_z}{\partial y} - \frac{\partial V_y}{\partial z}\right)\hat{i} + \left(\frac{\partial V_x}{\partial z} - \frac{\partial V_z}{\partial x}\right)\hat{j} + \left(\frac{\partial V_y}{\partial x} - \frac{\partial V_x}{\partial y}\right)\hat{k}\right]$$

$$\vec{\omega} = \frac{1}{2}\{(0-3)\hat{i} + (0+0)\hat{j} - (3+5x^2)\hat{k}\}\ rad/sec$$

$$\vec{\omega} = -1.5\hat{i} - (1.5+2.5x^2)\hat{k}\ rad/sec$$

3.19

A flow has the following velocity field:

$$\mathbf{V} = (10t + x)\mathbf{i} + yz\mathbf{j} + 5t^2\mathbf{k} \quad \text{ft/s}$$

What is the angular velocity of a fluid element at $x = 10$ ft, $y = 3$ ft, and $z = 5$ ft? Along what surface is the flow always irrotational?

$$\vec{V} = (10t+x)\hat{i} + yz\hat{j} + 5t^2\hat{k}$$

$$\vec{\omega} = \frac{1}{2}\ curl\ \vec{V} = -\frac{1}{2}y\hat{i}$$

At (10,3,5) we have: $\vec{\omega} = -\left(\frac{3}{2}\right)\hat{i}$ *rad/unit time*

The flow is irrotational along the surface $y=0$ . That is, along the $xz$ plane.

3.20

Show that any velocity field V expressible as the gradient of a scalar $\phi$ must be an irrotational field.

Show $curl(grad\ \phi) = \vec{0}$

$$\therefore\ curl\left(\frac{\partial\phi}{\partial x}\hat{i} + \frac{\partial\phi}{\partial y}\hat{j} + \frac{\partial\phi}{\partial z}\hat{k}\right) = \vec{0}$$

$$\therefore\ \left[\frac{\partial}{\partial y}\left(\frac{\partial\phi}{\partial z}\right) - \frac{\partial}{\partial z}\left(\frac{\partial\phi}{\partial y}\right)\right]\hat{i} + \left[\frac{\partial}{\partial z}\left(\frac{\partial\phi}{\partial x}\right) - \frac{\partial}{\partial x}\left(\frac{\partial\phi}{\partial z}\right)\right]\hat{j} + \left[\frac{\partial}{\partial x}\left(\frac{\partial\phi}{\partial y}\right) - \frac{\partial}{\partial y}\left(\frac{\partial\phi}{\partial x}\right)\right]\hat{k} = 0$$

Since $\frac{\partial^2\phi}{\partial y\partial z} = \frac{\partial^2\phi}{\partial z\partial y}$, etc. we see that we have proven our point provided the partial derivatives of $\phi$ are continuous.

3.21

If $\mathbf{V} = \text{grad}\ \phi$, what irrotational flow is associated with the function

$$\phi = 3x^2y - 3x + 3y^2 + 16t^3 + 12zt$$

Read Prob. 3.21 before proceeding.

$$\phi = 3x^2y - 3x + 3y^2 + 16t^3 + 12zt$$

$$\vec{V} = \nabla\phi = (6xy-3)\hat{i} + (3x^2+6y)\hat{j} + 12t\hat{k}$$

$$\therefore\ \vec{V} = (6xy-3)\hat{i} + (3x^2 + 6y)\hat{j} + 12t\hat{k}$$

http://ingesolucionarios.blogspot.com Edu_Zegarr_ch

Is the following flow field irrotational or not?

$\mathbf{V} = 6x^2y\mathbf{i} + 2x^3\mathbf{j} + 10\mathbf{k}$ ft/s

3.22

$$\frac{\partial V_x}{\partial y} - \frac{\partial V_y}{\partial x} = 6x^2 - 6x^2 = 0$$

$$\frac{\partial V_y}{\partial z} - \frac{\partial V_z}{\partial y} = 0$$

$$\frac{\partial V_z}{\partial x} - \frac{\partial V_x}{\partial z} = 0$$

$\therefore$ Flow is irrotational.

---

Explain why in a capillary tube the flow is virtually always rotational.

3.23

The centerline of the tube is close to the surface of the tube and so the boundary layer in such flows will cover most of the flow. The flow is then essentially rotational.

---

What were the basic laws and subsidiary laws that you used in your course in strength of materials?

3.24

*Basic Law* – { *Conservation of Mass*, *Newton's Law* }

*Subsidiary Law* – { *Hooke's Law*, *Elastic-Perfectly Plastic Model* }

http://ingesolucionarios.blogspot.com

# CHAPTER 4

http://ingesolucionarios.blogspot.com
Edu_Zegarr_ch

http://ingesolucionarios.blogspot.com

4.1

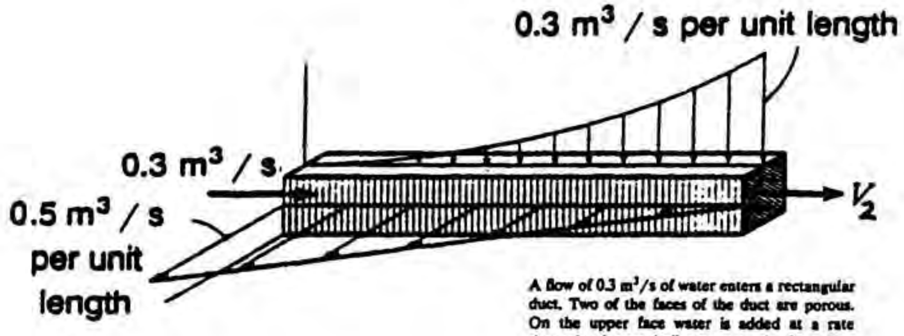


A flow of 0.3 m³/s of water enters a rectangular duct. Two of the faces of the duct are porous. On the upper face water is added at a rate shown by the parabolic curve; on the front face a portion of the water leaves at a rate determined linearly by the distance from the end. The maximum values of both rates are given in cubic meters per second per unit length along the duct. What is the average velocity $V$ of the water leaving the end of the duct if it is 0.3 m long and has a cross section of 0.01 m²?

a) Consider **top surface**. $w_z = ay^2 + by + c$

when $\begin{cases} y = 0 \\ w_z = 0 \end{cases}$ $\begin{cases} y = .3\ m \\ w_z = .3\ m^2/\text{sec} \end{cases}$ $\begin{cases} y = 0 \\ \dfrac{dw_z}{dy} = 0 \end{cases}$

$\therefore\ c = 0 \qquad b = 0 \qquad a = 3.33$

$w_z = 3.33\ y^2$

b) Consider **front surface**.

$w_x = my + b \qquad b = 0.5\ m^2/s$

$0 = m(.3) + .5 \qquad \therefore\ m = -1.667$

$w_x = -1.667y + .5\ m^2/\text{sec}$

For steady flow $\oiint \vec{V}\cdot d\vec{A} = 0$

Choose as control volume the interior of the block.

$$-(.3) - \int_0^{.3} 3.33y^2 dy + \int_0^{.3} (-1.667y + .5)dy + V_2(.010) = 0$$

$$V_2 = \frac{1}{.010}\left[.3 + 3.33\left(\frac{.3^3}{3}\right) + 1.667\ \frac{.3^2}{2} - (.5)(.3)\right] = \boxed{25.5\ m/\text{sec}}$$

http://ingesolucionarios.blogspot.com



In Prob. 4.1 determine the position along the duct where the average velocity of flow along the duct is a maximum.

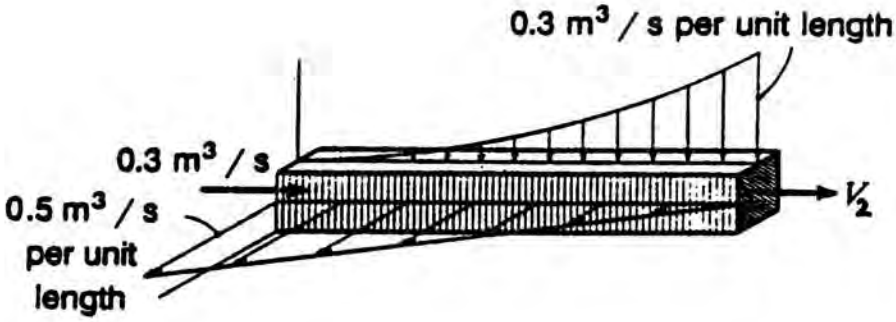


$$\frac{1}{.01}\left[.3 + \int_0^y 3.33\eta^2 d\eta - \int_0^y (-1.667\eta + .5)d\eta\right] = V(y)$$

$$V(y) = \frac{1}{.01}\left[.3 + 3.33\,\frac{y^3}{3} + 1.667\,\frac{y^2}{2} - .5y\right]$$

$$\frac{dV}{dy} = 0 = (3.33y^2 + 1.667y - .5)$$

Use quadratic formula
$$y = \frac{-1.667 \pm \sqrt{1.667^2 + (4)(3.33)(.5)}}{(2)(3.33)}$$

$$\boxed{y = .211\ m}$$

http://ingesolucionarios.blogspot.com

4.3

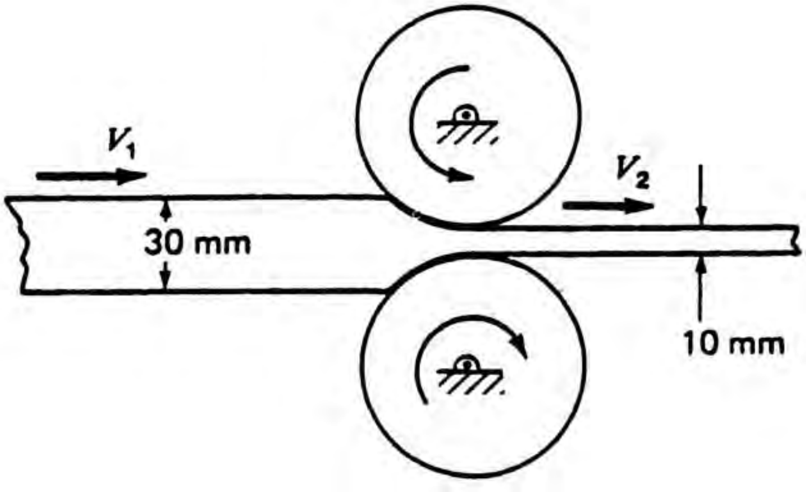


The control volume is stationary encompassing the hot steel as shown. Take the width of (1) as ($b$). We have steady flow so we can say

$$\oiint \rho \vec{V} \cdot d\vec{A} = 0$$

$$-\rho(.2)(.030)(b) + (1.10\rho)(.010)(1.09b)V_2 = 0$$

$$\boxed{V_2 = .500 \; m/s}$$

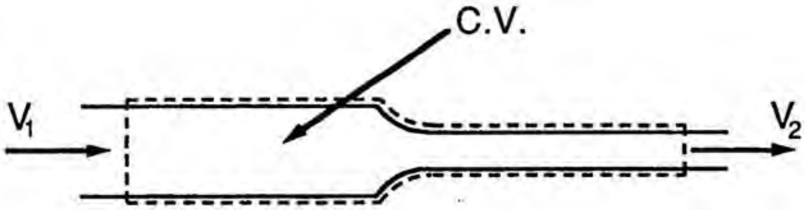

http://ingesolucionarios.blogspot.com

4.4

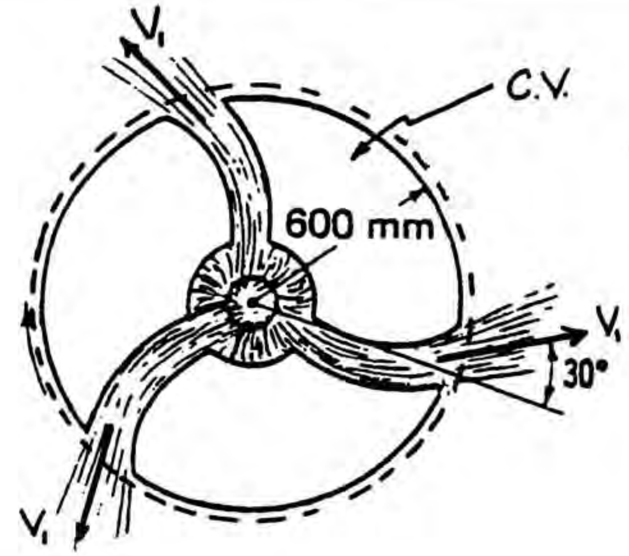


Shown is a device into which 0.3 $m^3/s$ of water is admitted at the axis of rotation and directed out radially through three identical channels whose exit areas are each 0.05 $m^2$ perpendicular to the direction of flow relative to the device. The water leaves at an angle of 30° relative to the device as measured from a radial direction, as is shown in the diagram. If the device rotates clockwise with a speed of 10 rad/s relative to the ground, what is the magnitude of the average velocity of the fluid leaving the vane as seen from the ground?

a) Choose a control volume fixed to the vane as shown above. Relative to this control volume the flow is steady. Also the flow is incompressible. Hence:

$$\oiint \vec{V} \cdot d\vec{A} = 0$$

$$-.3 + (3)(V_1)(.05) = 0$$

$$V_1 = 2.00 \ m/\text{sec}$$

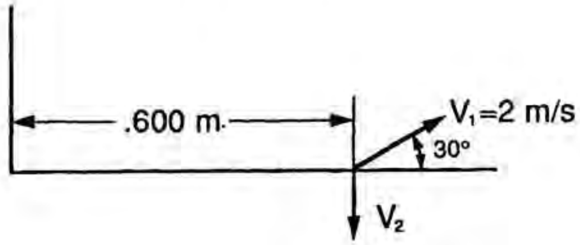


b)

$$V_2 = (.600)(10) = 6 \ m/\text{sec}$$

$$V^2 = [6-(2)(.5)]^2 + [(2)(.866)]^2$$

$$V = 5.29 \ m/\text{sec}$$

http://ingesolucionarios.blogspot.com

4.5

If the device in Prob. 4.4 has a clockwise angular acceleration of 5 rad/s² at the instant that the other data are given and the rate of increase of influx is 0.03 m³/s², what is the magnitude of the acceleration of the water leaving the device relative to the ground? Take the fluid as completely incompressible for the calculations.

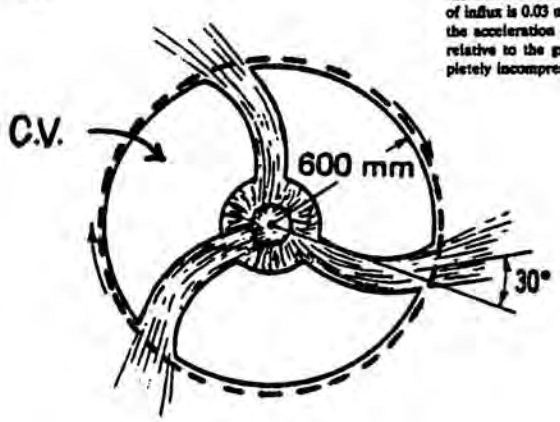


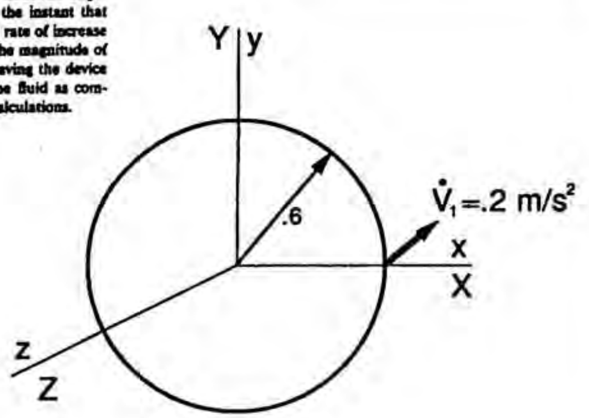


For unsteady incompressible flow we can say: $\iint_{c.s.} \vec{V}\cdot d\vec{A} = \frac{\partial}{\partial t}\left(\iiint_{c.v.} dv\right) = 0$

Using same control volume as in previous example we have: $3V_1(.05) = Q$

where $Q$ is the volume influx. Thus: $V_1 = \left(\frac{1}{.15}\right)(\dot{Q}) = \left(\frac{1}{15}\right)(.03) = .2\ m/\text{sec}^2$

$$\vec{a}_{XYZ} = \vec{a}_{xyz} + \ddot{\vec{R}} + 2\vec{\omega}\times\vec{V}_{xyz} + \dot{\vec{\omega}}\times\vec{\rho} + \vec{\omega}\times(\vec{\omega}\times\vec{\rho})$$

$$\vec{a}_{xyz} = .2\cos 30°\,\hat{i} + .2\sin 30°\,\hat{j}$$

$$\ddot{\vec{R}} = 0 \qquad \vec{\omega} = -10\hat{k} \qquad \dot{\vec{\omega}} = -5\hat{k} \qquad \vec{\rho} = .6\hat{i}$$

$$\vec{V}_{xyz} = 2\cos 30°\,\hat{i} + 2\sin 30°\,\hat{j}$$

$$\vec{a}_{XYZ} = (.2)(.866)\,\hat{i} + (.1)\,\hat{j} + \vec{0} + (2)(-10\hat{k})\times[(2)(.866)\,\hat{i} + \hat{j}]$$
$$+ (-5\,\hat{k})\times(.6\,\hat{i}) + (-10\,\hat{k})\times[(-10\,\hat{k})\times(.6\,\hat{i})]$$

$$\vec{a}_{XYZ} = .1732\,\hat{i} + .1\,\hat{j} - 34.6\,\hat{j} + 20\,\hat{i} - 3\,\hat{j} - 60\,\hat{i} = -39.83\,\hat{i} - 37.5\,\hat{j}\ m/\text{sec}^2$$

$$|\vec{a}| = \sqrt{39.83^2 + 37.5^2} = \boxed{54.7\ m/\text{sec}^2}$$

4.6

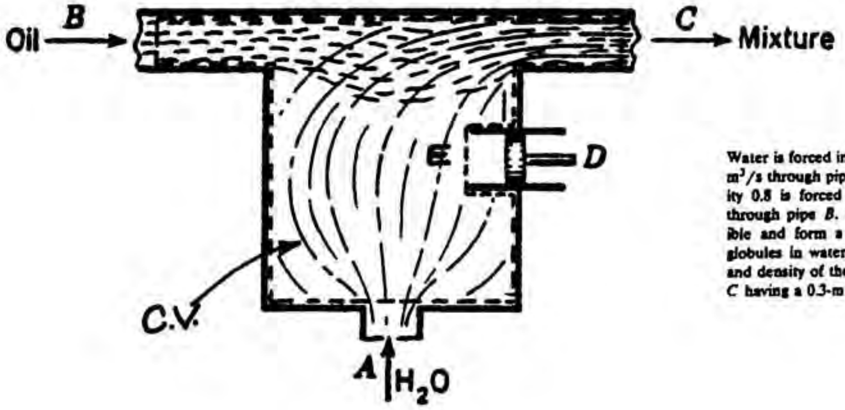


Water is forced into the device at the rate of 0.1 $m^3/s$ through pipe *A*, while oil of specific gravity 0.8 is forced in at the rate of 0.03 $m^3/s$ through pipe *B*. If the liquids are incompressible and form a homogeneous mixture of oil globules in water, what is the average velocity and density of the mixture leaving through pipe *C* having a 0.3-m diameter?

For steady flow we can say for the control volume:

$$\oiint \rho \vec{V} \cdot d\vec{A} = 0$$

$$\therefore \quad -(1{,}000)(.1) - (800)(.03) + \rho V \frac{\pi(.3)^2}{4} = 0$$

$$\rho V = 1.754$$

We can assume no chemical reaction between oil and water and its mixture is incompressible; it is clear that volume is conserved. Hence:

$$(.1) + (.03) = Q = .13$$

$$\therefore \quad V_c \frac{\pi(.3^2)}{4} = .13$$

$$V_c = 1.839 \ m/\text{sec}$$

$$\therefore \quad \rho_c = \frac{1.754}{1.839} = \boxed{953.7 \ kg/m^3}$$

http://ingesolucionarios.blogspot.com



In Prob. 4.3 the piston at $D$ having a 150-mm diameter moves at the rate of 0.3 m/s to the left. What is the average velocity of the fluid leaving at $C$?

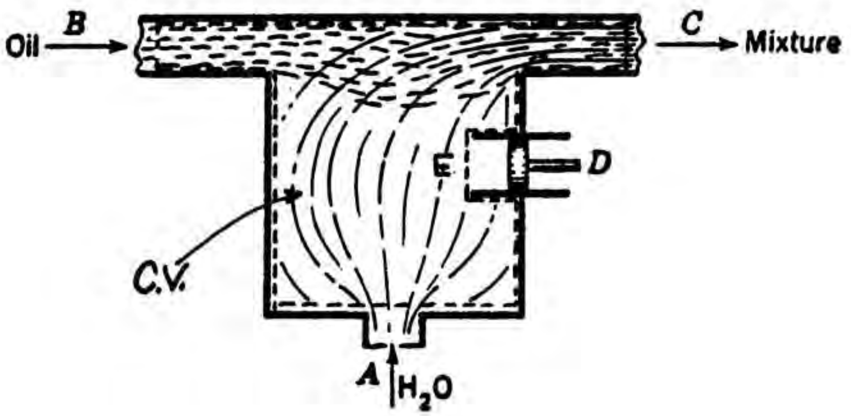


For the control volume shown in the previous example, one should know at any time the nature of the fluids at region $E$ in order to proceed accurately. However, because of the geometry of the system and the large influx of water at $A$, we can assume that we have only water at $E$. Thus, for the control volume shown we can consider steady flow.

**Conservation of mass** gives us

$$(-1{,}000)(.1) - (800)(.03) - (1{,}000)(.3)\frac{\pi(.150)^2}{4} + \rho V_c \frac{\pi(.3)^2}{4} = 0$$

$$\rho V_c = 1{,}829$$

Also we have **conservation of volume.**

$$.1 + .03 + (.3)\frac{(\pi)(.15)^2}{4} = Q = .1353\ m^3/\text{sec}$$

$$\therefore\ V_c = \frac{.1353}{\frac{(\pi)(.3)^2}{4}} = 1.914\ m/\text{sec}$$

$$\therefore\ \rho = \frac{1{,}829}{1{,}914} = \boxed{955.5\ kg/m^3}$$

http://ingesolucionarios.blogspot.com

4.8

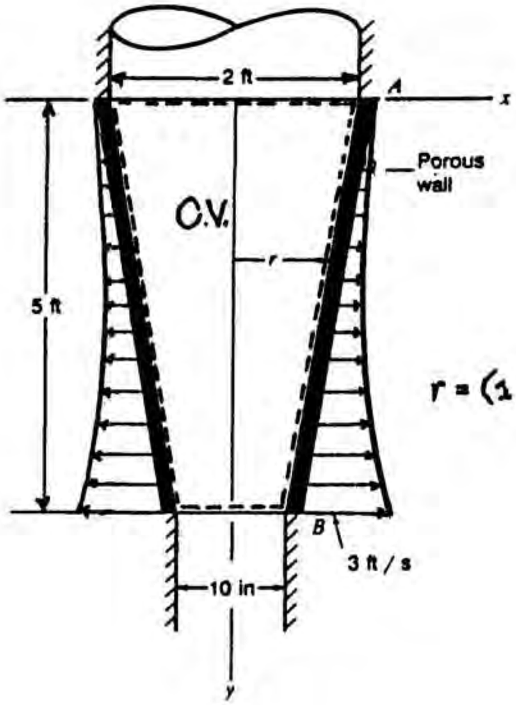


Do Ex. 4.5 for the case where the radial velocity varies parabolically from zero at $A$ to 3 ft/s at $B$.

$$r = \left(1 - \frac{7}{60}y\right)\ ft$$

$$r = \left(1 - \frac{7}{60}y\right)\ ft$$

The **radial** velocity is: $V_r = Cy^2 + B$

when

$$\begin{cases} y = 5 & V_r = 3 \\ y = 0 & V_r = 0 \end{cases}$$

$$\therefore\ B = 0 \qquad C = \frac{3}{25} \qquad V_r = \frac{3}{25}(y^2)$$

**Continuity Eq.:** $$-50 + \int_0^5 \left(\frac{3}{25}y^2\right)(2\pi r)dy = Q_B$$

$$Q_B = 50 - \int_0^5 \left(\frac{3}{25}\right)(2\pi)y^2\left(1 - \frac{7}{60}y\right)dy = 50 - \left(\frac{3}{25}\right)(2\pi)\left[\frac{y^3}{3} - \frac{7}{60}\frac{y^4}{4}\right]\Big|_0^5$$

$$\boxed{Q = 32.33\ cfs}$$

4.9

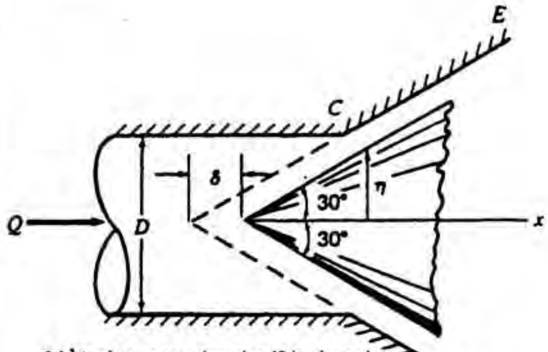


5 ft³/s of water goes through a 12-in pipe and then is directed through a region around a 60° cone. What is the average velocity in the region from C to E as a function of η and δ? Evaluate for δ = 2 in and η = 16 in.

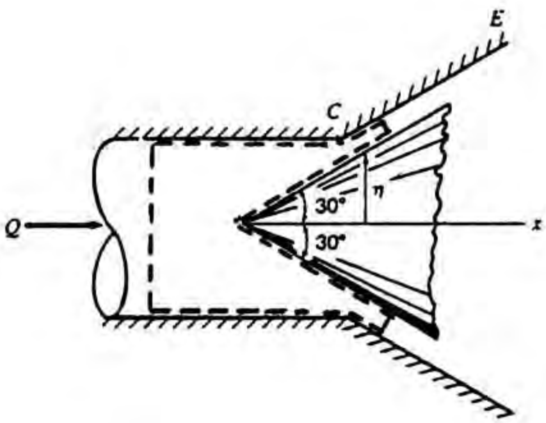


**Assumptions**

1. Steady incompressible flow.
2. 1-D in and out of C.V.

**Continuity Eq.:**

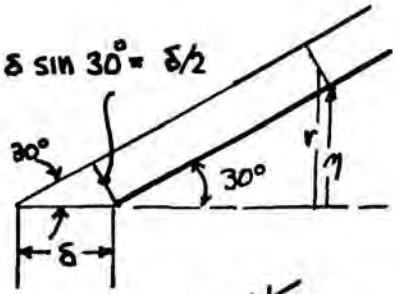


$$\oiint \rho \vec{V} \cdot d\vec{A} = 0$$

$$-5 + V(2\pi)\left(\eta + \frac{\delta}{4}\cos\theta\right)\left(\frac{\delta}{2}\right) = 0$$

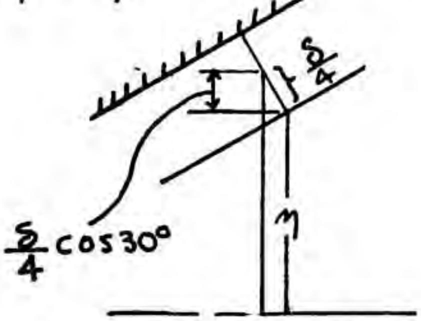


$$V = \frac{\left(\frac{5}{\pi}\right)}{(\eta + .2165\delta)\delta} \quad ft/\text{sec}$$

$$\therefore \quad V = \frac{1.592}{[(\eta + .2165\delta)\delta]} \quad ft/\text{sec}$$

At $\eta = 16\ in.$ $\quad \delta = 2\ in.$

$$V = \frac{1.592}{\left[\left(\frac{16}{12} + .2165\frac{2}{12}\right)\left(\frac{2}{12}\right)\right]}$$

$$V = 6.973 \quad ft/\text{sec}$$

http://ingesolucionarios.blogspot.com

4.10

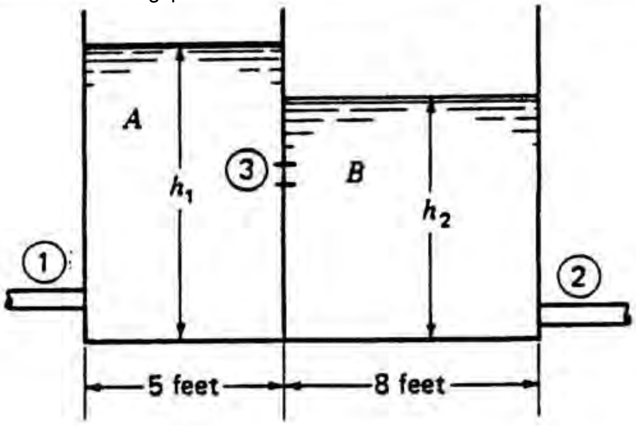


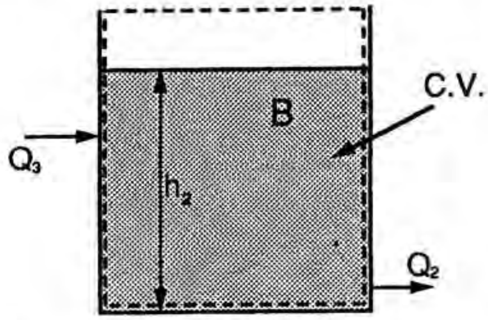


Water is flowing in at ① into a rectangular tank $A$ with a length of 5 ft and a width of 5 ft. The rate of flow $Q_1$ at ① is 5 ft³/s. At the instant of interest, $h_1 = 15$ ft and water is flowing into tank $B$ through ③ at the rate of 4 ft³/s. At this instant, $h_2$ is 12 ft. If the free surface in tank $B$ is dropping at the rate of 0.2 ft/s, what is the flow $Q_2$ at ② at the instant of interest? Tank $B$ is of length 8 ft and has the same width as tank $A$. Also, what is the rate at which $h_1$ is changing value?

Consider **control volume for tank** ***B*** .

For **conservation of mass** for water we have:

$$\oiint \rho \vec{V} \cdot d\vec{A} = -\frac{\partial}{\partial t}\iiint \rho \, dv$$

$$-(\rho)(4) + (\rho)(Q_2) = -\frac{\partial}{\partial t}[(\rho)(8)(5)(h_2)]$$

$$\therefore \quad -4 + Q_2 = -40\left(\frac{dh_2}{dt}\right) = -(40)(-.2) \qquad Q = 12 \ cfs$$

<u>Now go to tank ***A***</u>.

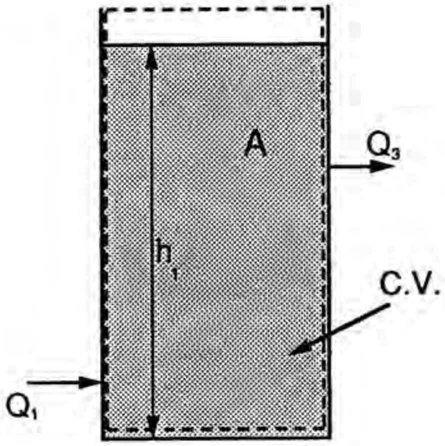


For **conservation of water** we have:

$$4\rho - 5\rho = -(5)(5)\left(\frac{dh_1}{dt}\right)\rho$$

$$\boxed{\frac{dh_1}{dt} = .04 \ ft/\text{sec}}$$

http://ingesolucionarios.blogspot.com

4.11

A rectangular ditch of width 10 m has a sloping bottom as shown. Water is added at the rate $Q$ of 100 L/s. What is $dh/dt$ when $h = 1$ m? How long does it take for the free surface to go from $h = 1$ m to $h = 1.2$ m?

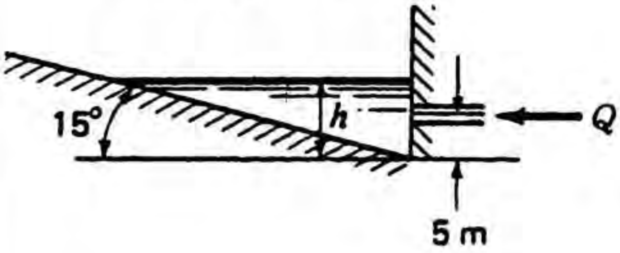


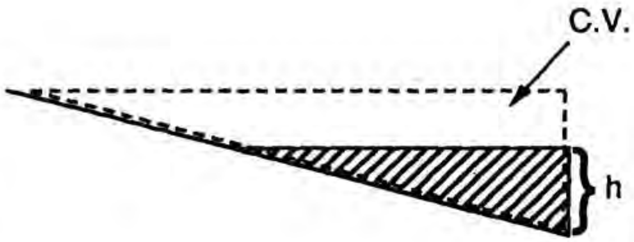


Consider water in c.v. **Conservation of mass** requires that for the c.v.

$$\oiint \rho \vec{V} \cdot d\vec{A} = -\frac{\partial}{\partial t}\iiint \rho \, d\upsilon$$

$$-(\rho)(100)(.001) = -\frac{\partial}{\partial t}\left\{\left[\frac{1}{2}\left(\frac{h}{\tan 15^\circ}\right)\right](h)(10)(\rho)\right\}$$

$$.1 = \frac{\partial}{\partial t}[(18.66)(h^2)]$$

Note that $h$ is a function of time so

$$.1 = 37.3h\frac{dh}{dt} \qquad \therefore \left(\frac{dh}{dt}\right) = .00268 \ m/\text{sec}$$

Separate variables: $(.1)dt = 37.3 \ h \, dh$

Integrating we get: $(.1)(t_2 - t_1) = 37.3 \left.\frac{h^2}{2}\right|_1^{1.2}$

$$t_2 - t_1 = \Delta t = \frac{37.3}{(.1)(2)}[1.2^2 - 1^2] = \boxed{82.1 \text{ sec}}$$

http://ingesolucionarios.blogspot.com

4.12

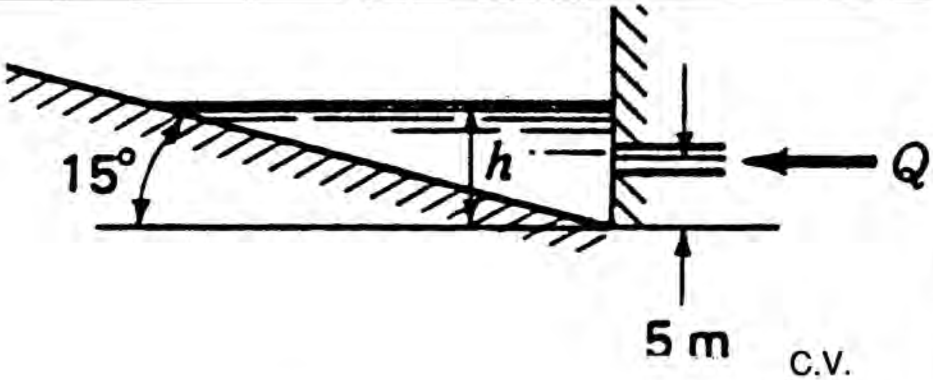


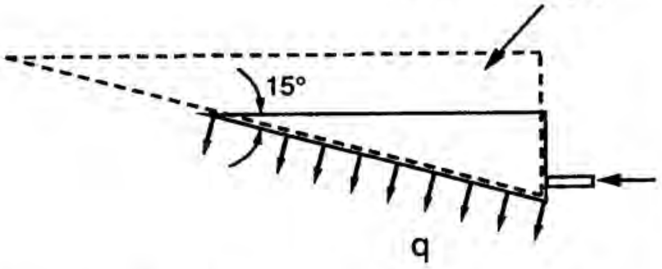


**Conservation of mass** for the water is given as follows: $\oiint \rho \vec{V} \cdot d\vec{A} = -\frac{\partial}{\partial t} \iiint \rho \, dv$

$$-(\rho)(100)(.001) + (2)(.001)(10)\left(\frac{h}{\sin 15°}\right)\rho = \frac{\partial}{\partial t}\left[\frac{1}{2}h \frac{h}{\tan 15°}\right]10\rho$$

$$-.1 + (.0773)\,h = -(37.3)\,h\,\frac{dh}{dt} \qquad (1)$$

When $h=1\ m$, we get for $\frac{dh}{dt}$: $\quad \frac{dh}{dt} = \frac{.1-.0773}{37.3} = 6.09\times10^{-4}\ m/\text{sec}$

$$\Delta t = (37.3)\left(\frac{1}{.0773^2}\right)\left[.1-.0773h - (.1)\ln(.1-.0773h)\right]\Big|_1^{1.2}$$

Integrate:

$$\Delta t = \frac{37.3}{.0773^2}\{.1-(.0773)(1.2) - (.1)\ln[.1-(.0773)(1.2)] - .1$$

$$+ .0773 + (.1)\ln[.1-(.0773)(1)]\}$$

$$\Delta t = \boxed{616.8 \text{ sec}}$$

http://ingesolucionarios.blogspot.com

4.13

A rectangular cube $a$ meters on an edge is moving in space at a very high velocity $V$ m/s. The box is designed to capture solar dust particles inside the box as they strike the box. Because the speed of the box is much faster than the speed of the dust particles, we can assume that the latter are stationary. If there are $n$ dust particles per unit volume, and if $N$ represents the number of dust particles inside the box, what is the rate of accumulation of dust particles in the box ($dN/dt$)? What is the total number of dust particles $\Delta N$ collected during a time interval $\Delta t$ seconds?

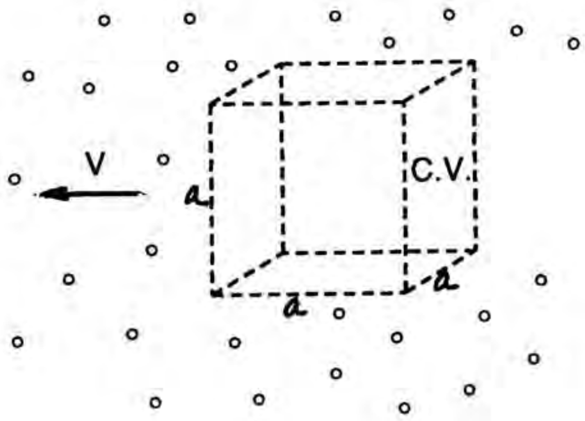


We choose the inside of the box as the C.V.

**Conservation of mass** then says:

$$\oiint_{c.s.} \rho \vec{V} \cdot d\vec{A} = -\frac{\partial}{\partial t} \iiint_{c.v.} \rho \, d\upsilon$$

$$\begin{cases} n \text{ replaces } \rho \\ N \text{ replaces } \iiint \rho \, d\upsilon \end{cases}$$

Hence: $$-n(Va^2) = -\frac{\partial N}{\partial t} \qquad \therefore \quad \frac{dN}{dt} = nVa^2$$

$$\boxed{\Delta N = nVa^2 \Delta t}$$

4.14

Do Prob. 4.13 using a sphere of radius $a$ as the dust collector. Start by considering a strip of length $a\,d\theta$, then integrate to cover surface of impact. What general simple rule can you now state in words for a collector of any shape? *Hint:*

$$\int \sin\theta \cos\theta \, d\theta = \frac{\sin^2\theta}{2}$$

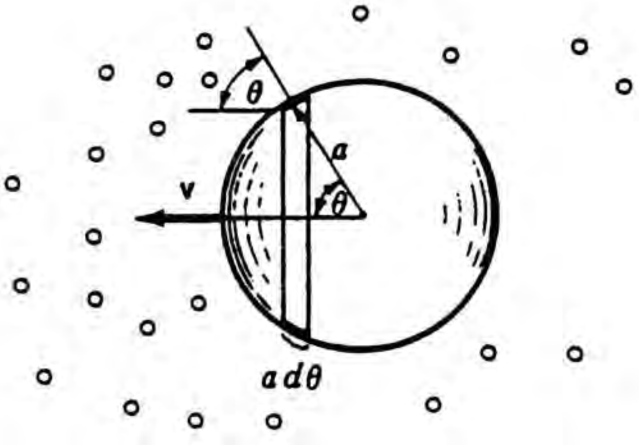


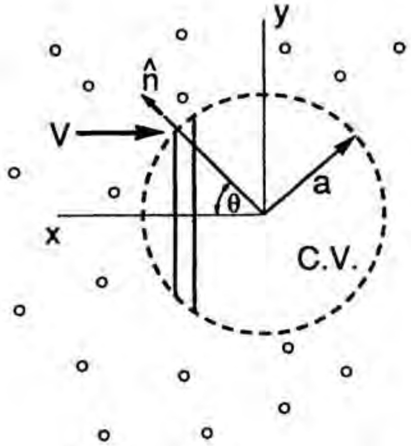


Fix control volume to sphere.

Use $\eta$ for $\rho$

Use $N$ for $\iiint \rho \, dv$

$$\therefore \quad -\int_0^{\frac{\pi}{2}} [(a\,d\theta)(2\pi a)\sin\theta]\cos\theta\, Vn = -\frac{dN}{dt}$$

$$-2\pi a^2 Vn \int_0^{\frac{\pi}{2}} \sin\theta \cos\theta \, d\theta = -\frac{dN}{dt}$$

$$-2\pi a^2 Vn \left(\frac{1}{2}\right) \sin^2\theta \Big|_0^{\frac{\pi}{2}} = -\frac{dN}{dt} \qquad \frac{dN}{dt} = (\pi a^2) Vn$$

$$\therefore \quad \boxed{\Delta N = \pi a^2 Vn \Delta t}$$

Note $\pi a^2$ is the projected area of sphere in direction of motion. Hence, for any shape all ɔu need is the projected area of the container in the direction of motion.

http://ingesolucionarios.blogspot.com

4.15 First, let us establish the inlet velocity profile. We have: $V = ay^2$

When $y = .009\ m$, then $V = V_0$. Hence: $V_0 = a(.009)^2$

$$a = \frac{V_0}{(.009)^2}$$

A Kingsbury thrust bearing consists of a number of small pads whose bottom surface is inclined to the horizontal. One such pad $A$ is shown in detail. Oil moves under the pad; and because of the flow under the pad, there is a vertical thrust developed. The velocity profile of the oil relative to the base is shown at the inlet to the pad. If we do not consider side leakage, what is the average speed relative to the ground of the oil on leaving the region under the pad? $V_0$ is the average velocity of the pad relative to the stationary base.

The profile is:

$$V = \frac{V_0}{(.009)^2}\, y^2$$

Choose a control volume under pad $A$ and moving with $A$. The velocity profile relative to the control volume of the inlet is then

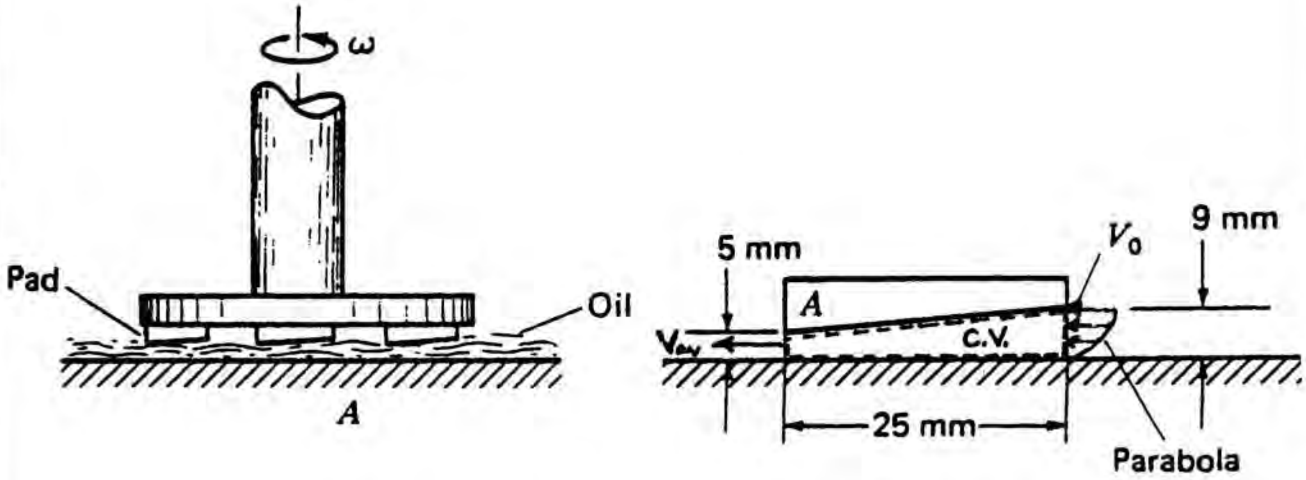


$$V - V_0 = \frac{V_0}{(.009)^2}\, y^2 - V_0 = V_0\left[\left(\frac{y}{.009}\right)^2 - 1\right]$$

We can then say for the **conservation of mass** in this control volume:

$$\oiint_{c.s.} \rho \vec{V} \cdot d\vec{A} = -\frac{\partial}{\partial t}\iiint_{c.v.} \rho\, dv = 0$$

Using $b$ as the width of the pad, we have

$$-\int_0^{.009} V_0\left[\left(\frac{y}{.009}\right)^2 - 1\right] dy\,(\rho b) + V_{av}(\rho b)(.005) = 0$$

where $V_{av}$ is the exit velocity relative to the pad $= \frac{6}{5} V_0$. $(V_{av})_{BASE} = -.2 V_0$

http://ingesolucionarios.blogspot.com

4.16

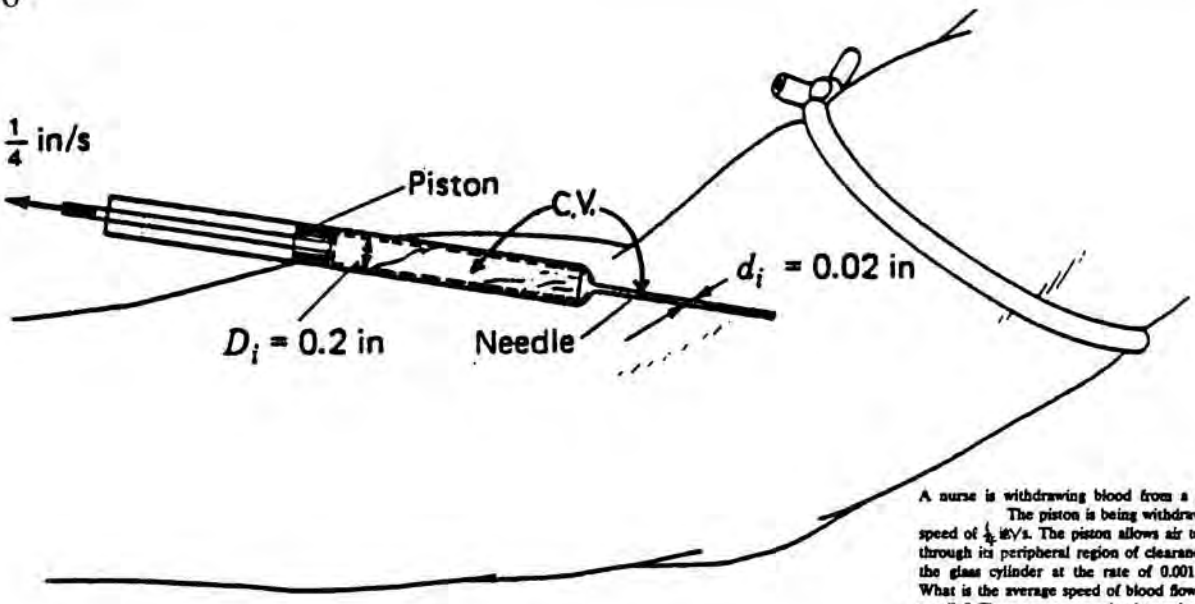


A nurse is withdrawing blood from a patient. The piston is being withdrawn at a speed of $\frac{1}{4}$ in/s. The piston allows air to move through its peripheral region of clearance with the glass cylinder at the rate of 0.001 $in^3/s$. What is the average speed of blood flow in the needle? Choose as a control volume the region just to the right of the piston to the tip of the needle.

$$\oiint_{c.s.} \rho \vec{V} \cdot d\vec{A} = -\frac{\partial}{\partial t} \iiint_{c.v.} \rho \, dv$$

Consider conservation of blood.

$$-(V_{av})(\rho_{blood})\left(\frac{\pi d_i^2}{4}\right) = -(\pi)\left(\frac{D_i^2}{4}\right)\left(\frac{.25}{12}\right)\rho_{blood} + \frac{.001}{1728}\rho_{blood}$$

$$-V_{av}\frac{(\pi)\left(\frac{.02}{12}\right)^2}{4} = -\frac{\pi}{4}\left(\frac{.2^2}{144}\right)\left(\frac{.25}{12}\right) + \frac{.001}{1728}$$

$$\boxed{V_{av} = 1.818 \; ft/\text{sec}}$$

http://ingesolucionarios.blogspot.com

Edu_Zegarr_ch

4.17

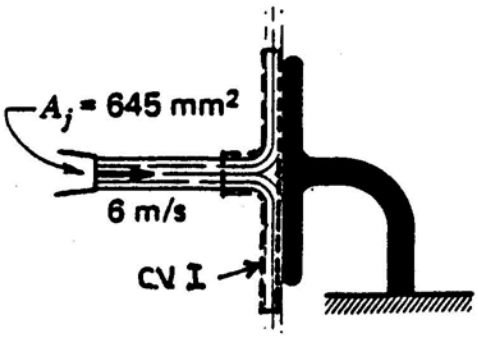


A jet of water issues from a nozzle at a speed of 6 m/s and strikes a stationary flat plate oriented normal to the jet. The exit area of the nozzle is 645 mm². What is the total horizontal force on the plate from the fluids in contact with it? Solve this problem using two different control volumes.

Assumptions for both control volumes:

1. Steady, incompressible flow.
2. 1-D flow out of nozzle.

a) Control volume (1).

$$R_x + \iiint_{c.v.} B_x \rho dv = \oint\!\!\oint_{c.s.} V_x(\rho \vec{V} \cdot d\vec{A})$$

$$p_{atm} A_p + R_x = -V_x^2 \rho A_j$$

where $A_p$ is the projected area of the plate in the $x$ direction.

$$R_x = -(6)^2(1,000)(645 \times 10^{-6}) = -23.2$$

Taking the reaction:

$$K_x = 23.2\ N$$

b) Control volume (2).

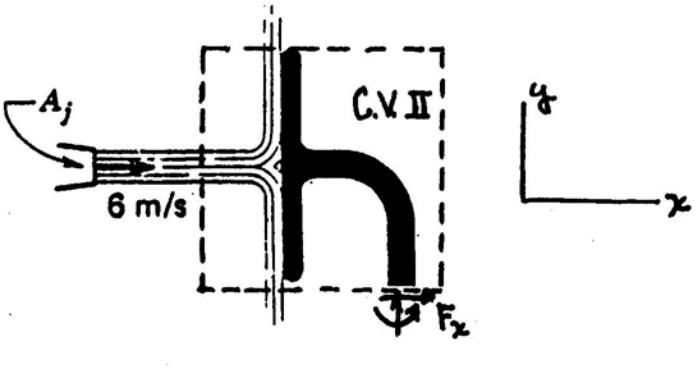


Writing the **momentum equation** in the $x$ direction, we get:

$$F_x = -\rho V_x^2 A_j = -(1,000)(6^2)(645 \times 10^{-6}) = \boxed{-23.2}$$

 http://ingesolucionarios.blogspot.com

In Prob. 4.17 the nozzle is moving with a speed of 1.5 m/s to the left relative to the ground.
(a) If the water issues out at 6 m/s relative to the nozzle, what is the horizontal force on the plate from all fluids?
(b) If, in addition, the plate is moving at a uniform speed of 3 m/s to the right relative to the ground, what is the horizontal force on the plate from the fluids?
Use only one control volume in each case.

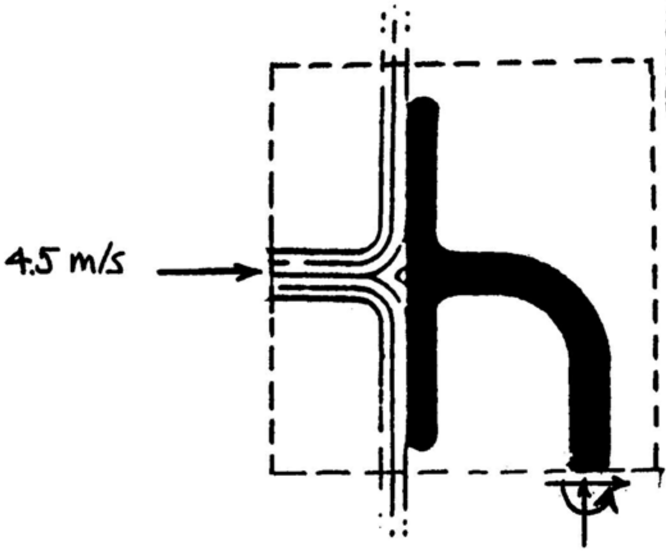


a) Control volume is stationary. The jet velocity relative to the control volume is **4.5 *m/s***. Using the same assumptions we listed in Prob. 4.17 we have for the **momentum equation** in the *x* direction:

$$F_x = -\rho V_x^2 A_j = -(1{,}000)(4.5)^2(645\times10^{-6})$$

$$\therefore \quad \boxed{K_x = 13.06\ N}$$

b) The speed of the jet relative to the control volume is now 1.5 *m*/sec

$$F_x = -\rho V_x^2 A_j = -(1{,}000)(1.5)^2(645\times10^{-6})$$

$$\therefore \quad \boxed{K_x = 1.4513\ N}$$

 http://ingesolucionarios.blogspot.com

Determine the value of $V_0$ and $\theta$ for max...um power.

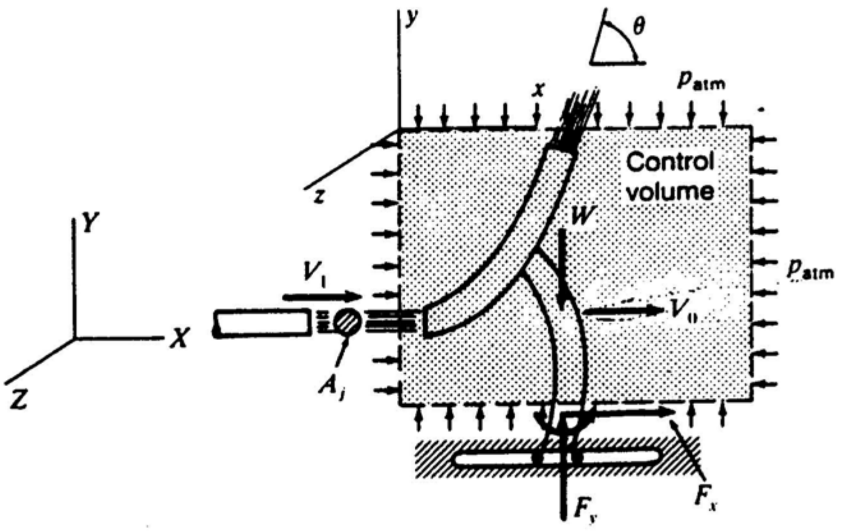


We get for Example 4.1: $(K_x)_T = (V_1 - V_0)^2(\rho A_j)(1-\cos\theta)$

The power developed by the jet on the trough is

$$P = (V_1 - V_0)^2(\rho A_j)(1-\cos\theta)(V_0)$$

For maximum power: (a) $\dfrac{\partial P}{\partial V_0} = 0$ (b) $\dfrac{\partial P}{\partial \theta} = 0$

**From (a):** $-(2)(V_1 - V_0)(\rho A_j)(1-\cos\theta)(V_0) + (V_1 - V_0)^2(\rho A_j)(1-\cos\theta) = 0$

Canceling terms: $-2V_0 + (V_1 - V_0) = 0$ $\therefore\ V_0 = -\dfrac{1}{3}V_1$

The fact that we canceled $(V_1 - V_0)$ means that $V_0 = V_1$ gives an extreme but this is obviously the minimum power.

**From (b):**

$$(V_1 - V_0)^2(\rho A_j)(\sin\theta)(V_0) = 0$$

Clearly $\theta = 0$ gives a minimum condition while $\theta = \pi$ gives a maximum condition.

Thus for maximum power we have the condition:

$$\boxed{V_0 = \frac{1}{3}V_1} \qquad \boxed{\theta = \pi}$$

 http://ingesolucionarios.blogspot.com

What is the force on the elbow-nozzle assembly from the water and air? The water issues out as a free jet from the nozzle. The interior volume of the nozzle elbow assembly is 0.1 m³.

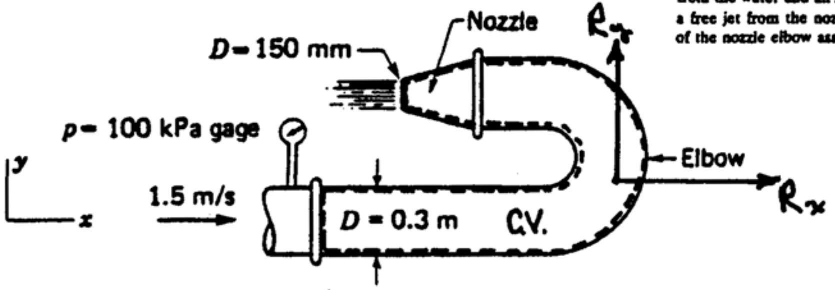


| |
|---|
| **Assumptions:** |
| 1. Incompressible steady flow. |
| 2. 1-D flow in and out of the shown control volume. |

The **momentum** equation for the control volume is:

$$\vec{F}_s + \iiint_{C.V.} \vec{B}\rho dv = \oiint_{C.S.} \vec{V}(\rho \vec{V}\cdot d\vec{A})$$

We then have, using absolute pressures:

$$(100\times10^3 + p_{atm})\left(\frac{(\pi)(.3^2)}{4}\right)\hat{i} + (p_{atm})\left(\pi\frac{.150^2}{4}\right)\hat{i} + R_x\hat{i} + R_y\hat{j} - (9{,}806)(.1)\hat{j}$$

$$= -(1{,}000)(1.5)^2(\pi)\left(\frac{.3^2}{4}\right)\hat{i} - (1{,}000)(V_2)^2(\pi)\left(\frac{.150^2}{4}\right)\hat{i}$$

Using **continuity** we get for $V_2$ :

$$(1.5)\left(\frac{\pi}{4}\right)(.3)^2 = V_2\left(\frac{\pi}{4}\right)(.15)^2 \qquad V_2 = 6\ m/\text{sec}$$

From the **momentum** equation: $R_y = 980.6\ N$

$$\therefore \boxed{K_y = -980.6\ N}$$

$$R_x = -7{,}864$$

$$\therefore \boxed{K_x = 7{,}864}$$

http://ingesolucionarios.blogspot.com Edu_Zegarr_ch 

http://ingesolucionarios.blogspot.com



Find the horizontal force on the device of Prob. 5.6 if the oil enters at a pressure of $1.4 \times 10^5$ Pa gage, the water at $1.2 \times 10^5$ Pa gage, and the mixture leaves at a pressure of $1.0 \times 10^5$ Pa gage. Pipe $B$ has a diameter of 0.5 m, pipe $A$ has a diameter of 0.3 m, and pipe $C$ has a diameter of 0.3 m. From Prob. 5.6 we have $\rho_c = 955.5\ kg/m^3$ and $V_c = 1.914$ m/s.

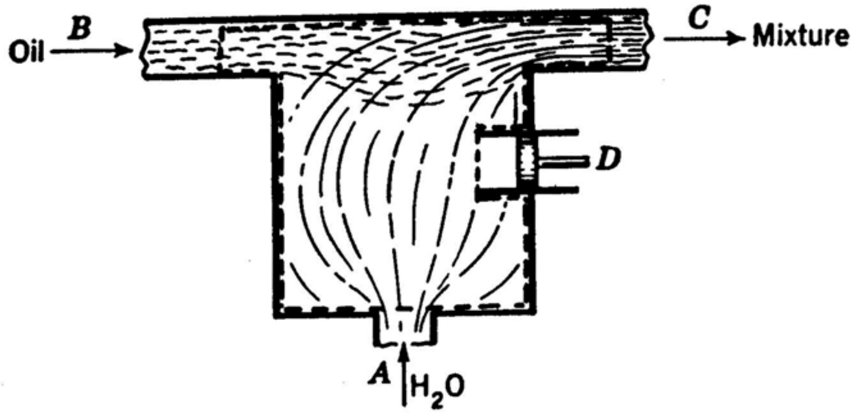


**Data:**

$$\begin{cases} p_B = 1.4\times10^5\ Pa\ g & D_B = .5m \\ p_A = 1.2\times10^5\ Pa\ g & D_A = .3m \\ p_C = 1.0\times10^5\ Pa\ g & D_C = .3m \end{cases}$$

**Assumptions:**

1. Steady incompressible flow.
2. 1-D flow at the control surface.
3. No chemical interaction between the two species.

Using the results of Prob. 4.7, we have for the **momentum** equation in the $x$ direction:

$$(1.4\times10^5)(\pi)\left(\frac{.5^2}{4}\right) - (1.0\times10^5)(\pi)\left(\frac{.3^2}{4}\right) + R_x = -(800)(.03)\left(\frac{(.03)}{\frac{\pi(.5)^2}{4}}\right) + (953.7)(.13)(1.839)$$

$$R_x = -2.02\times10^4\ N$$

$$K_x = 2.02\times10^4\ N$$

http://ingesolucionarios.blogspot.com

http://ingesolucionarios.blogspot.com
4.22

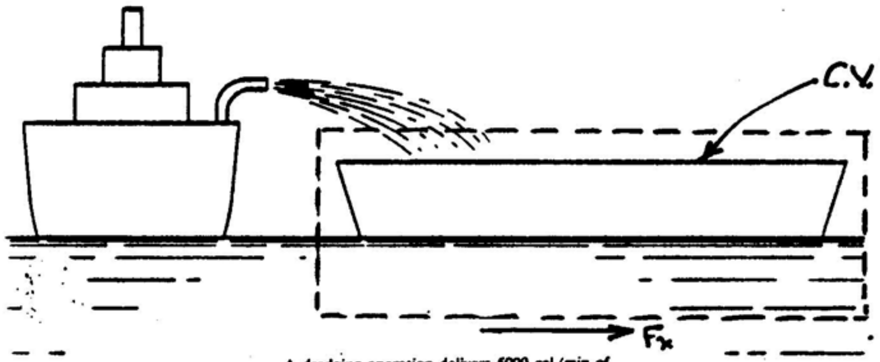


A dredging operation delivers 5000 gal/min of a mixture of mud and water having a specific gravity of 3 into a stationary barge. What is the force on the barge which tends to separate the barge from the dredger? The area of the nozzle exit is 1 ft².

Use the **linear momentum** equation in the $x$ direction. First find the horizontal velocity of the water and mud.

$$V = \frac{Q}{A} = \frac{(5{,}000)(.002228)}{1} = 11.14\ ft/\text{sec}$$

Now use gauge pressures for the **momentum** equation in the $x$ direction.

$$R_x = -(\rho VA)(V) = \frac{-(5{,}000)(.002228)}{g}(3)(62.4)(11.14) = -721\ lbs$$

The reaction to this force is the desired force: $K_x = 721\ lbs$

This is the force tending to separate the two boats.

4.23

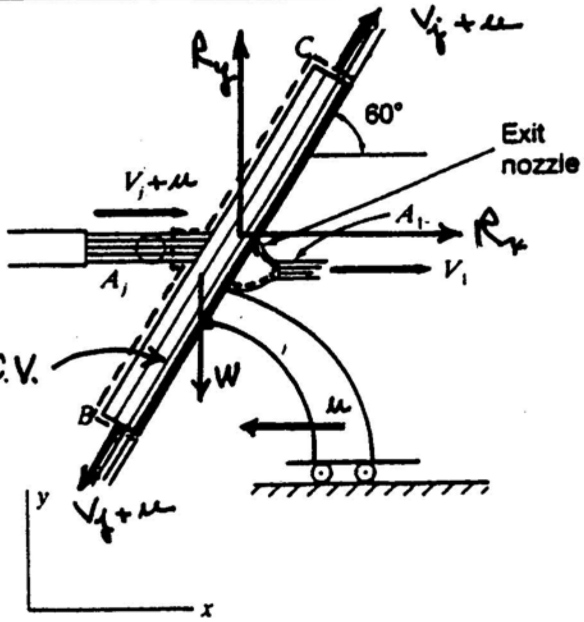


| Assumptions | |
|---|---|
| 1. | Steady incomp. flow. |
| 2. | 1-D in and out. |
| 3. | Neglect affects of gravity and friction on speed rel. trough. |

**Continuity Equation:** $\oiint \rho \vec{V} \cdot d\vec{A} = 0$

$$-(V_j + u)(.08) + (V_j + u)(A') + 2(V_j + u)(A') + (10)(.02) = 0 \qquad \begin{cases} V_j = 6 \quad m/s \\ u = -2 \quad m/s \end{cases}$$

$$\therefore \quad -(8)(.08) + (8)A' + (16)A' + .2 = 0 \qquad A' = .01833 \quad m^2$$

**Linear momentum in $x$ direction:**

$$\underset{c.s.}{\oiint} T_x dA + \underset{c.v.}{\iiint} B_x \rho dv = \underset{c.s.}{\oiint} V_x(\rho \vec{V} \cdot d\vec{A}) + \frac{\partial}{\partial t} \underset{c.v.}{\iiint} V_x \rho dv$$

$$\therefore \quad R_x = -(V_j+u)(\rho)(V_j+u)(A_j) + (10)(\rho)(10)(A_1)$$

$$+ (V_j+u)(\cos 60°)(\rho)(V_j+u)(A') - (V_j+u)(\cos 60°)(2)(\rho)(V_j+u)A'$$

$$R_x = -(8)^2(1{,}000)(.08) + (100)(1{,}000)(.02) + (8^2)(.5)(1{,}000)(.01833)$$

$$-(8^2)(.5)(2)(1{,}000)(.01833)$$

$$R_x = -3{,}707 \quad N$$

$$K_x = 3707 \text{ N}$$

A trough moves at constant speed $u = 2$ m/s. A jet of water having a speed of $V_j = 6$ m/s impinges on the trough as shown. The water leaves the trough in three places. At the exit nozzle, the speed of water $V_1$ is 10 m/s relative to the trough. The area $A_1 = 0.02$ m² while the area $A_j = 0.08$ m². Twice as much water leaves at $B$ then leaves at $C$. Compute thrust on the trough. Use a control volume that does not cut the trough support. Assume no friction and no affect of gravity on the *unconfined* flow in the trough itself. However, the exit nozzle flow results in a different fluid exit velocity because in the nozzle the flow is *confined* and squirts out at a higher velocity relative to the trough.

4.24

Do Prob. 4.23 using a control volume that cuts the trough support.

Fix *xyz* to vane.

Fix *XYZ* to ground.

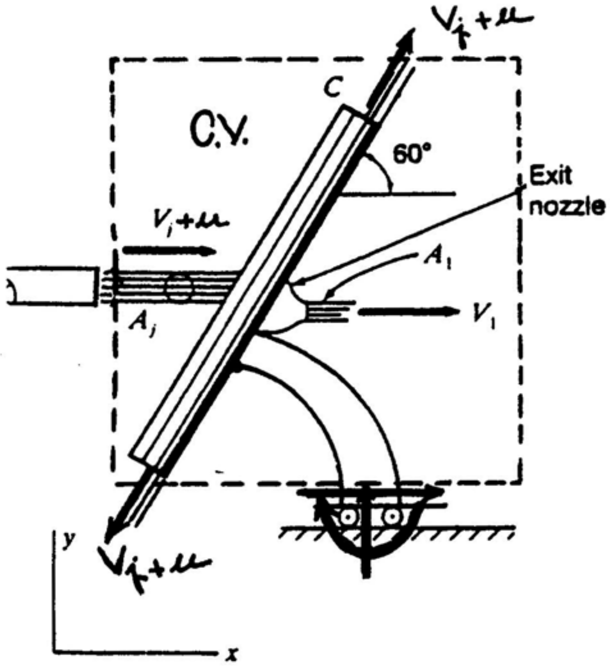


**DATA:**

$(V_j)_{XYZ} = 6\ m/s$ $\quad A_1 = .02\ m^2$

$(u)_{XYZ} = -2\ m/s$ $\quad A_j = .08\ m^2$

$(V_1)_{xyz} = 10\ m/s$ $\quad Q_B = 2Q_A$

**Assumptions**

1. Steady flow.
2. 1-D crossing C.S.
3. Neglect effects of gravity and friction on speed rel. to trough.
4. Incompressible flow.

**Continuity:**

$$-(\rho)(V_j+u)(.08) + (V_j+u)(\rho)(A') + 2(V_j+u)\rho A' + \rho(10)(.02) = 0$$

$$-(8)(.08) + 8(A') + 16(A') + .2 = 0$$

$$A' = 01833 \quad m^2$$

**Linear momentum eq.:**

$$\oiint_{c.s.} T_x dA + \iiint_{c.v.} B_x \rho dv = \oiint_{c.s.} V_x(\rho \vec{V}\cdot d\vec{A}) + \frac{\partial}{\partial t}\iiint_{c.v.} V_x \rho dv$$

$$F_x = -(V_j+u)(\rho)(V_j+u)(A_j) + (10)(\rho)(10)(.02)$$

$$+ (V_j+u)(\cos 60°)(\rho)(V_j+u)A' + (V_j+u)(\cos 60°)(2)(V_j+u)(A')$$

http://ingesolucionarios.blogspot.com

(cont.)

$$F_x = -(8^2)(1{,}000)(.08) + (10)(1{,}000)(10)(.02)$$

$$+ (8^2)(.5)(1{,}000)(.01833) - (2)(8^2)(.5)(1{,}000)(.01833)$$

$$F_x = -3{,}707\ N \qquad \textit{force from ground}$$

Take reaction for force from fluids.

$$\boxed{K_x = 3{,}707\ N}$$

4.25

**Assumptions**

1. Steady incompressible flow.
2. 1-D flow from incoming jets and outgoing flow.
3. Neglect friction of pipe walls.

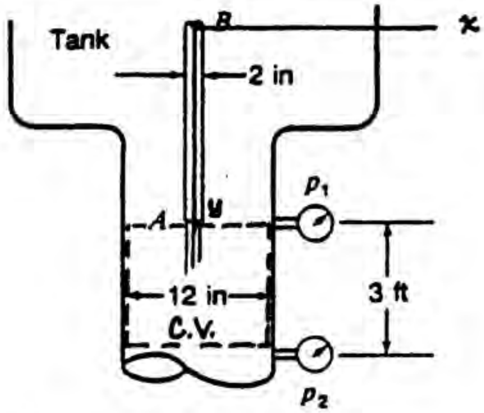


We are looking down from above on a large tank of water which is connected to a 12-in horizontal pipe. The water, once in the pipe, has a speed of 5 ft/s before reaching the end of a second thin pipe, AB, through which water is pumped at a speed of 25 ft/s. The pressure $p_1$ in the main stream at the position shown is 5 psig and at A the high speed jet emerges as a free jet. At about 3 ft from A the two flows are thoroughly mixed. If we neglect friction at the walls of the 12-in pipe, what is the pressure $p_2$?

**Continuity eq.:**

$$-(1.938)(5)\left(\frac{\pi}{4}\right)\left[\frac{12^2-2^2}{144}\right] - (1.938)(25)\left(\frac{\pi}{4}\right)\left(\frac{2^2}{144}\right) + (1.938)(V_2)\left(\frac{\pi}{4}\right)\left(\frac{12^2}{144}\right) = 0$$

$$V_2 = 5.556 \quad ft/\text{sec}$$

**Linear momentum:**

$$\oiint_{c.s.} T_x dA + \iiint_{c.v.} B_x \rho dv = \oiint_{c.s.} V_x(\rho \vec{V}\cdot d\vec{A}) + \frac{\partial}{\partial t}\iiint_{c.v.} V_x \rho dv$$

Note $p_{atm}$ contributions cancel.

$$(5)\left(\frac{\pi}{4}\right)(12^2) - (p_2)_g\left(\frac{\pi}{4}\right)(12^2) = -(5)(\rho)(5)\left(\frac{\pi}{4}\right)\left(\frac{12^2-2^2}{144}\right)$$

$$-(25)(\rho)(25)\left(\frac{\pi}{4}\right)\left(\frac{2^2}{144}\right) + (5.556)(\rho)(5.556)\left(\frac{\pi}{4}\right)\left(\frac{12^2}{144}\right)$$

Subst. $\rho = 1.938$

$$\therefore \quad \boxed{(p_2) = 5.145\ psig = 19.85\ psia}$$

http://ingesolucionarios.blogspot.com

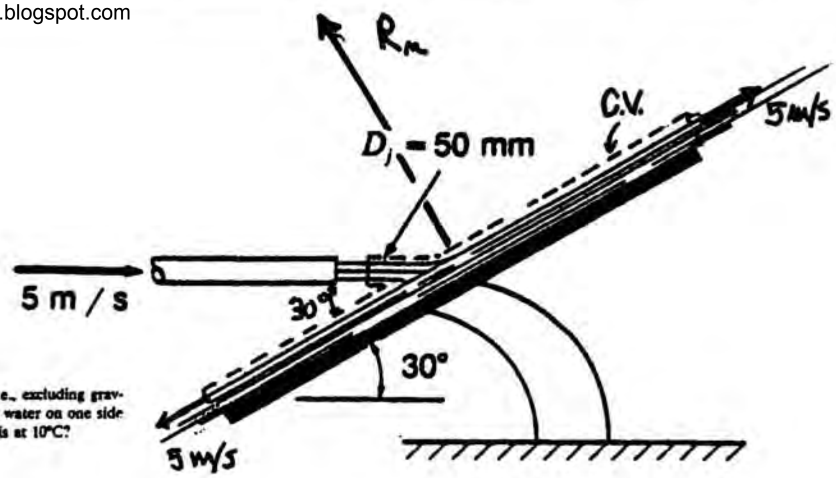


What is the dynamic force (i.e., excluding gravity) on the flat plate from the water on one side and air on the other? Water is at 10°C?

**Assumptions**

1. 1-D flow in.
2. Free jet from nozzle.
3. Incompressible steady flow.
4. Neglect friction and gravity.

Linear momentum in $n$ direction:

$$\oiint_{c.s.} T_n dA + \iiint_{c.v.} B_n \rho dv = \oiint_{c.s.} V_n \rho \vec{V} \cdot d\vec{A} + \frac{\partial}{\partial t} \iiint_{c.v.} V_n \rho dv$$

$$R_n = (5\sin 30°)(999.7)(5)\left(\frac{\pi}{4}\right)(.05)^2$$

$$\therefore \quad \boxed{K_n = -24.54}$$

http://ingesolucionarios.blogspot.com

Water flows at a steady rate through the device shown. The following data apply:

$p_1 = 20$ psig
$V_1 = 10$ ft/s
$D_1 = 15$ in
$D_2 = 8$ in
$D_3 = 4$ in
$V_2 = 20$ ft/s

What is the horizontal thrust from water and air?

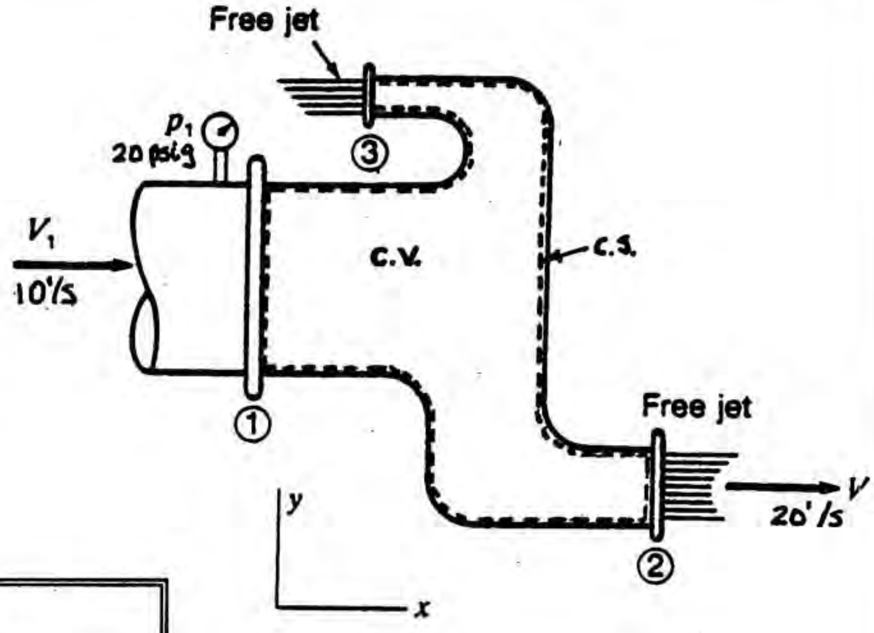


| Assumptions |
|---|
| 1. Steady, incompressible flow. |
| 2. 1-D in and out. |
| 3. Free jets at (2) and (3). |

**Linear momentum eq.:**

$$\oiint_{CS} T_x dA + \iiint_{CV} B_x \rho dv = \oiint_{CS} V_x(\rho \vec{V}\cdot d\vec{A}) + \frac{\partial}{\partial t}\iiint_{CV} V_x \rho dv$$

$$(20)\left(\frac{\pi}{4}\right)(15^2) + R_x = -(10)(1.938)(10)\left(\frac{\pi}{4}\right)\left(\frac{15^2}{144}\right)$$

$$+ (20)(1.938)(20)\left(\frac{\pi}{4}\right)\left(\frac{8^2}{144}\right) - (V_3)(1.938)(V_3)\left(\frac{\pi}{4}\right)\left(\frac{4^2}{144}\right) \quad (1)$$

**Continuity eq.:**

$$-(\rho)(10)\left(\frac{\pi}{4}\right)\left(\frac{15^2}{144}\right) + (\rho)(20)\left(\frac{\pi}{4}\right)\left(\frac{8^2}{144}\right) + (\rho)(V_3)\left(\frac{\pi}{4}\right)\left(\frac{4^2}{144}\right) = 0$$

$$V_3 = 60.63 \quad ft/\text{sec}$$

Subst. into (1):

$$R_x + 3{,}534 = -237.8 + 270.6 - 621.7$$

$$R_x = -4{,}123 \qquad \therefore \qquad \boxed{K_x = 4{,}123 \text{ lb}}$$


http://ingesolucionarios.blogspot.com Edu_Zegarr_ch

4.28

Water is moving steadily through a double-exit elbow for which $V_1 = 5$ m/s. The inside volume of the elbow is 1 m³. Find the vertical and horizontal forces from air and water on the elbow. Take $V_2 = 10$ m/s.

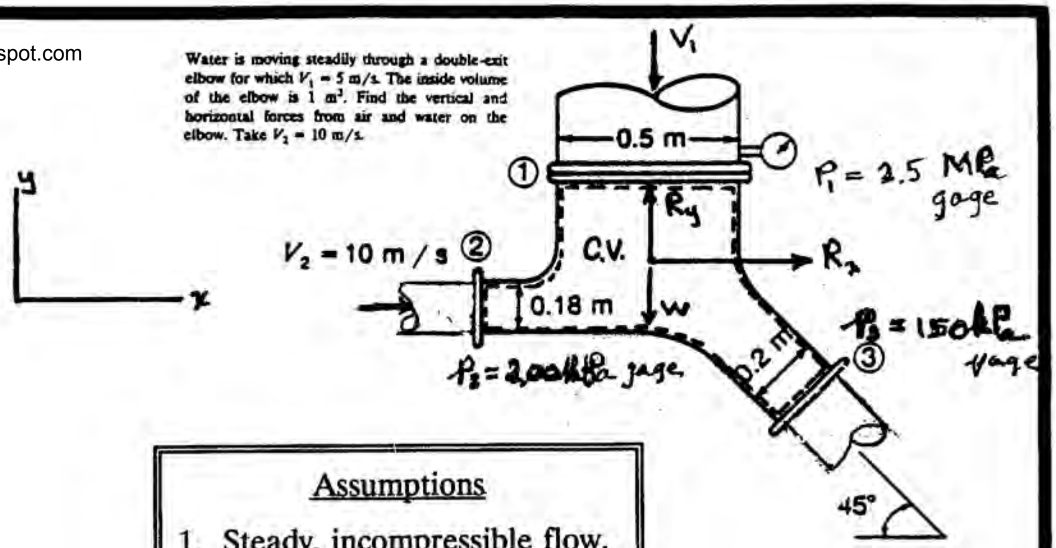


**Assumptions**

1. Steady, incompressible flow.
2. 1-D flows across C.S.

**Continuity eq.:** $\rho_1 V_1 A_1 = \rho_2 V_2 A_2 + \rho_3 V_3 A_3$

$$5\left(\frac{\pi}{4}\right)(.5)^2 = 10\left(\frac{\pi}{4}\right)(.18^2) + V_3\left(\frac{\pi}{4}\right)(.2^2) \qquad V_3 = 23.15\ m/s$$

**Linear momentum eq.:** $\oiint_{c.s.} \vec{T}dA + \iiint_{c.v.} \vec{B}\rho dv = \oiint_{c.s.} \vec{V}(\rho\vec{V}\cdot d\vec{A}) + \frac{\partial}{\partial t}\iiint_{c.s.} V\rho dv$

$$\left(200\times10^3\right)\frac{\pi}{4}\left(.18^2\right)-\left(150\times10^3\right)(.707)\frac{\pi}{4}\left(.2^2\right)+R_x =$$

$$-(10)(\rho)(10)\left(\frac{\pi}{4}\right)(.18^2) + (23.15)(.707)(\rho)(23.15)\left(\frac{\pi}{4}\right)(.2^2)$$

$$R_x = 7602\ \text{N} \qquad K_x = -7602\ \text{N}$$

**y component:**

$$R_y - \left(2.5\times10^6\right)\left(\frac{\pi}{4}\right)\left(.5^2\right) - (1)(9{,}806) = (5)(1{,}000)(5)\left(\frac{\pi}{4}\right)(.5)^2$$

$$+ (-23.15)(.707)(1{,}000)(23.15)\left(\frac{\pi}{4}\right)(.2^2)$$

$$R_y = 4.934\times10^5 \qquad K_y = 4.934\times10^5$$

**Final result:** $\vec{K}_{TOTAL} = 7602\hat{i} + 4.034\times10^5\,\hat{j}$ N

http://ingesolucionarios.blogspot.com

4.29

Water is flowing through a reducing elbow. A pipe welded to the reducing elbow passes through the reducing elbow and carries a steady flow of oil.
(*a*) Find the horizontal force component from the *water* on the *elbow*.
(*b*) Find horizontal force from *air* on the elbow.
(*c*) Find horizontal force from *oil* on the elbow.
(*d*) Give total horizontal force on the elbow from water, air, and oil.

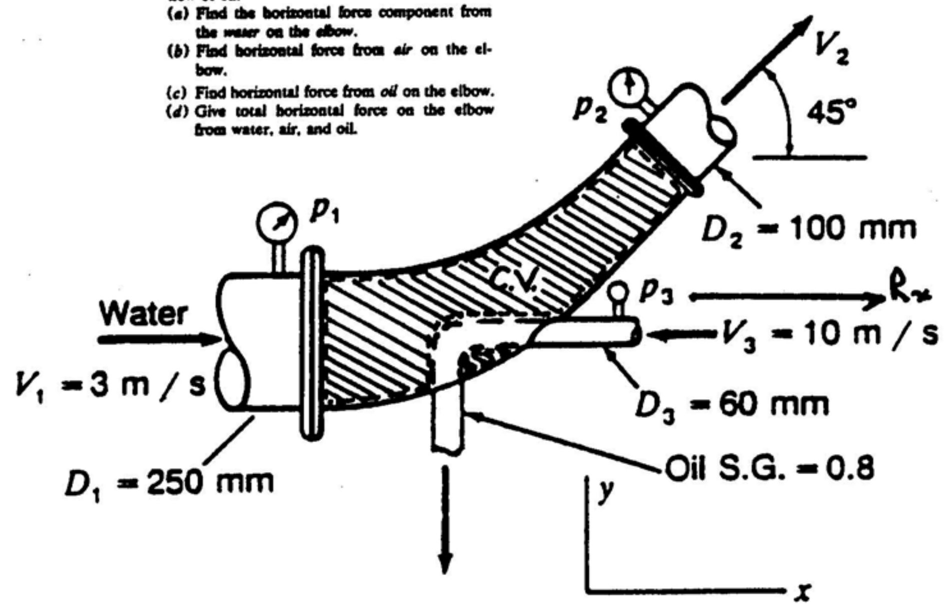


Data: $p_1$ = 250 kPa gage
$p_2$ = 180 kPa gage
$p_3$ = 200 kPa gage
$p_{atm}$ = 101.325 kPa

**Assumptions**

1. Steady, incompressible flow.
2. 1-D flows at (1) and (2).

**Linear Momentum:**

$$\oiint_{c.s.} T_x dA + \iiint_{c.v.} B_x \rho d\upsilon = \oiint_{c.s.} V_x(\rho \vec{V} \cdot d\vec{A}) + \frac{\partial}{\partial t}\iiint_{c.v.} V_x \rho d\upsilon$$

$$R_x + (250{,}000+101{,}325)\left(\frac{\pi}{4}\right)(.250)^2 - (180{,}000+101{,}325)\left(\frac{\pi}{4}\right)(.100)^2(.707)$$

$$= -(3)(1{,}000)(3)\left(\frac{\pi}{4}\right)(.250)^2 + (V_2)(.707)(1{,}000)(V_2)\left(\frac{\pi}{4}\right)(.100)^2 \qquad (1)$$

**Continuity:** $\rho_1 V_1 A_1 = \rho_2 V_2 A_2$

$$3\left(\frac{\pi}{4}\right)(.250)^2 = (V_2)\left(\frac{\pi}{4}\right)(.100)^2 \qquad V_2 = 18.75 \ m/s$$



http://ingesolucionarios.blogspot.com Edu_Zegarr_ch

http://ingesolucionarios.blogspot.com

(cont.)

Subst. into (1): $(R_x)_{WATER} = -1.4173\times10^4 \quad N$

$$(K_x)_{WATER} = 1.4173\times10^4 \quad N$$

b) $(K_x)_{AIR} = (101{,}325)\left[-\left(\frac{\pi}{4}\right)(.250)^2 + (.707)\left(\frac{\pi}{4}\right)(.100)^2 + \left(\frac{\pi}{4}\right)(.060)^2\right]$

$$(K_x)_{AIR} = -4{,}125 \quad N$$

c)

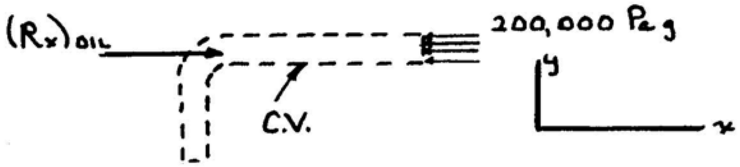


**Assumptions**
1. Steady, incompressible flow.
2. 1-D flows in and out.

**Linear momentum:**

$$-(200{,}000+101{,}325)\left(\frac{\pi}{4}\right)(.06)^2 + (R_x)_{OIL} = -(-10)(1{,}000)(.8)(10)\left(\frac{\pi}{4}\right)(.06)^2$$

$$(R_x)_{OIL} = 1{,}078 \quad N$$

$$\therefore \quad (K_x)_{OIL} = -1{,}078 \quad N$$

d)

$$(K_x)_{TOTAL} = 1.4173\times10^4 - 4{,}125 - 1{,}078 = 8{,}970\ N$$


http://ingesolucionarios.blogspot.com Edu_Zegarr_ch

4.30 A dustcropper is spraying a field with an insecti- [illegible] The fluid is coming out as *free jets* from six openings each of diameter 20 mm. If the coefficient of drag $C_D$ for the horizontal part of the device extending from the plane is 0.45, compute:

(*a*) the moment at the base at $A$ from the fluid flow inside the pipe. Do not use gauge pressure.
(*b*) the moment at the base at $A$ from the air flow over the base portion of the system outside.
(*c*) the total moment at $A$.

*Note:* We will later learn that for the drag force $F_D$ we have $F_D = \frac{1}{2}C_D A\rho V^2$ where $A$ is the projected area of the surface of the base portion in the direction of the velocity and $\rho$ is the density of the air.

$\rho_{insecticide} = 900\ kg/m^3$

Air: $T = 30°C$, $R = 287\ N\cdot m/kg\,K$, $p = 101{,}325\ P_a$

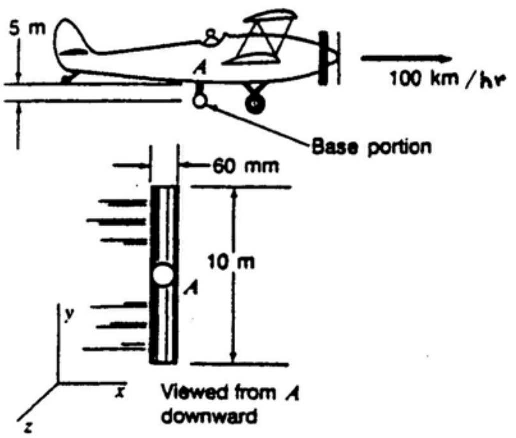


http://ingesolucionarios.blogspot.com

a) Velocity of insecticide free jets:

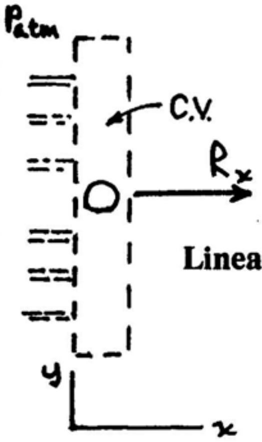


$$V = \frac{.01}{(6)\left(\frac{\pi}{4}\right)(.020)^2} = 5.305 \quad m/s$$

xyz fixed to plane

**Linear momentum equation:**

$$\oiint T_x dA + \iiint B_x \rho dv = \oiint V_x(\rho \vec{V}\cdot d\vec{A}) + \frac{\partial}{\partial t}\iiint V_x \rho dv$$

$$R_x + (101{,}325)(6)\left(\frac{\pi}{4}\right)(.02)^2 = -(5.305)(900)(.01)$$

$$R_x = -191.0 - 47.75 \doteq -238.7 \quad N \qquad K_x = 238.7 \quad N$$

$$M = (238.7)(.5) = 119.4 \quad N-m$$

b) **Evaluation of state for air:** $p = \rho r T$

$$101{,}325 = (\rho)(287)(273+30) \qquad \rho = 1.165 \quad kg/m^3$$

Compute **drag from air flow:**

$$D = C_D\left(\frac{1}{2}\right)\rho V^2 A = (.45)\left(\frac{1}{2}\right)(1.165)\left(100\ \frac{1{,}000}{3{,}600}\right)^2(10)(.06) = 121.4 \quad N$$

$$M = -(121.4)(.5) = -60.68 \quad N\cdot m$$

c)

$$M_{TOTAL} = 119.4 - 60.68 = \quad 58.72 \quad N\cdot m$$



http://ingesolucionarios.blogspot.com Edu_Zegarr_ch

http://ingesolucionarios.blogspot.com

4.31

30 L/s of water at 10°C enter a jet pump at $A$ at a pressure $p_1$ = 300,000 Pa gage. Oil is sucked in at $C$ at the rate of 1 L/s. The oil has a specific gravity of 0.65. A thoroughly mixed flow of water and oil leave at $B$ at a pressure $p_2$ of 150,000 Pa gage. The dimensions of $D_1$ and $D_2$ are 200 and 250 mm, respectively. What is the horizontal thrust on the pump from water, oil, and air? Density of the water is 999.7 kg/in³.

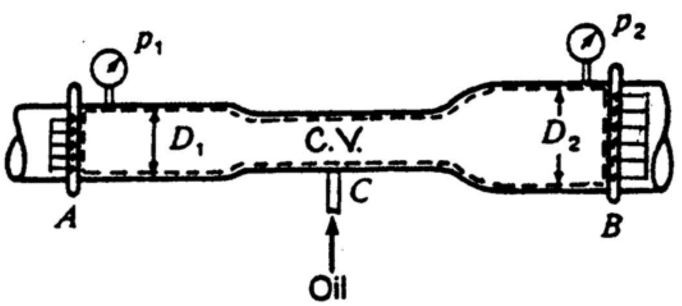


| Assumptions |
|---|
| 1. Steady, incompressible flow. |
| 2. 1-D in and out. |
| 3. Homogeneous mixture leaving. |

**Continuity equation (1). Mass:** $(.03)(999.7) + (.001)(.65)(999.7) = Q_2\rho_2$

$$30.64 = \rho_2 Q_2 \qquad (1)$$

**Continuity equation (2). Volume:** $.03 + .001 = Q_2 = .031 \quad m^3/s$

Subst. into (1): $\rho_2 = \dfrac{30.64}{.031} = 988.4 \quad kg/m^3$

**Linear momentum eq.:** $\oiint_{c.s.} T_x dA + \iiint_{c.v.} B_x \rho d\upsilon = \oiint_{c.s.} V_x(\rho \vec{V}\cdot d\vec{A}) + \dfrac{\partial}{\partial t}\iiint_{c.v.} V_x \rho d\upsilon$

$$R_x + (300{,}000)\left(\frac{\pi}{4}\right)(.200)^2 - (150{,}000)\left(\frac{\pi}{4}\right)(.250)^2$$

$$= -(V_1)(999.7)(.030) + (V_2)(988.4)(.031)$$

$$V_1 = \frac{.030}{\left(\frac{\pi}{4}\right)(.200)^2} = .9549 \quad m/s \qquad V_2 = \frac{.031}{\left(\frac{\pi}{4}\right)(.250)^2} = .6315 \quad m/s$$

$\therefore \; R_x = -2{,}071 \; N$ $\quad$ $K_x = 2{,}071 \; N$



http://ingesolucionarios.blogspot.com Edu_Zegarr_ch

http://ingesolucionarios.blogspot.com

4.32

**Bernoulli between** $F.S.$ **and** $E$ :

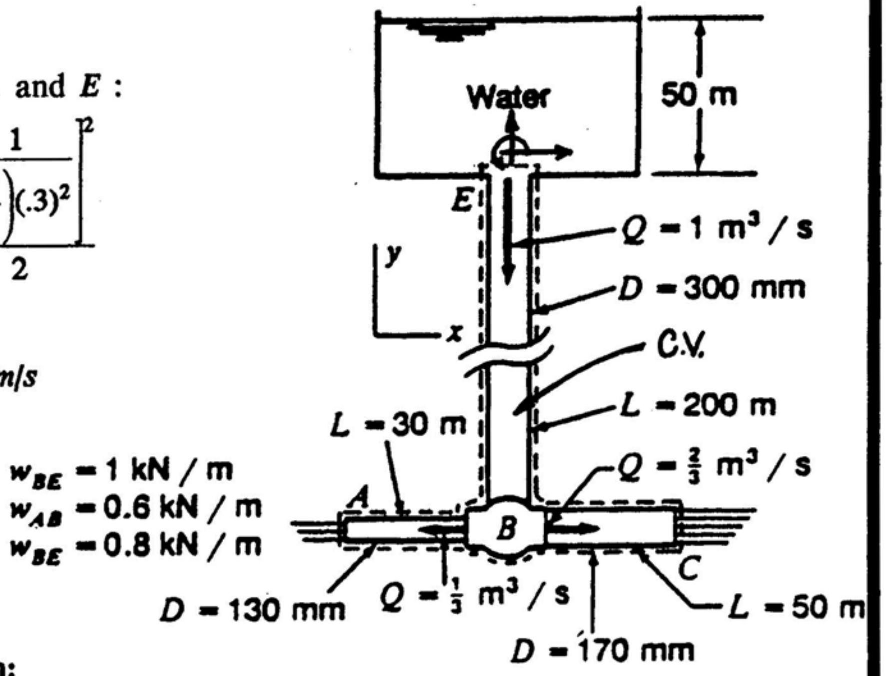


$$0 + 0 + 50g = \frac{p_E}{\rho} + \frac{\left[\frac{1}{\left(\frac{\pi}{4}\right)(.3)^2}\right]^2}{2}$$

$p_E = 390.4 \quad kPa\,g$

$$V = \frac{1}{\left(\frac{\pi}{4}\right)(.3)^2} = 14.15 \quad m/s$$

A *vertical* system conducts water from a large reservoir at the rate of 1 m³/s. At the tee at *B*, ⅓ m³/s goes to the left and ⅔ m³/s goes to the right. Pipe *EB* weighs 1 kN/m, pipe *AB* weighs 0.6 kN/m, and pipe *BC* weighs 0.8 kN/m. Find the *total* vertical and horizontal forces on the pipes from fluid flow and air as well from gravity on water and pipe. Free jets are at *A* and *C*.

**Momentum in** $y$ **direction:**

$$\oint\!\!\oint T_y dA + \iiint B_y \rho dv = \oint\!\!\oint V_y(\rho \vec{V} \cdot d\vec{A}) + \frac{\partial}{\partial t}\iiint V_y \rho dv$$

**Assumptions**

1. Steady flow.
2. 1-D flow.
3. Incompressible flow.

$$-(390{,}400)\left(\frac{\pi}{4}\right)(.300)^2 - (9{,}806)(200)\left(\frac{\pi}{4}\right)(.3)^2 - (9{,}806)(30)\left(\frac{\pi}{4}\right)(.130)^2 - (9{,}806)(50)\left(\frac{\pi}{4}\right)(.17)^2$$

$$-(200)(1{,}000) - (600)(30) - (800)(50) + R_y = (14.15)(1)(1{,}000)$$

$$R_y = 4.534\times10^5 = 453.4 \quad kN$$

$$\therefore \quad \boxed{K_y = -453.4 \quad kN}$$

4.33

http://ingesolucionarios.blogspot.com Edu_Zegarr_ch

http://ingesolucionarios.blogspot.com
(cont.)

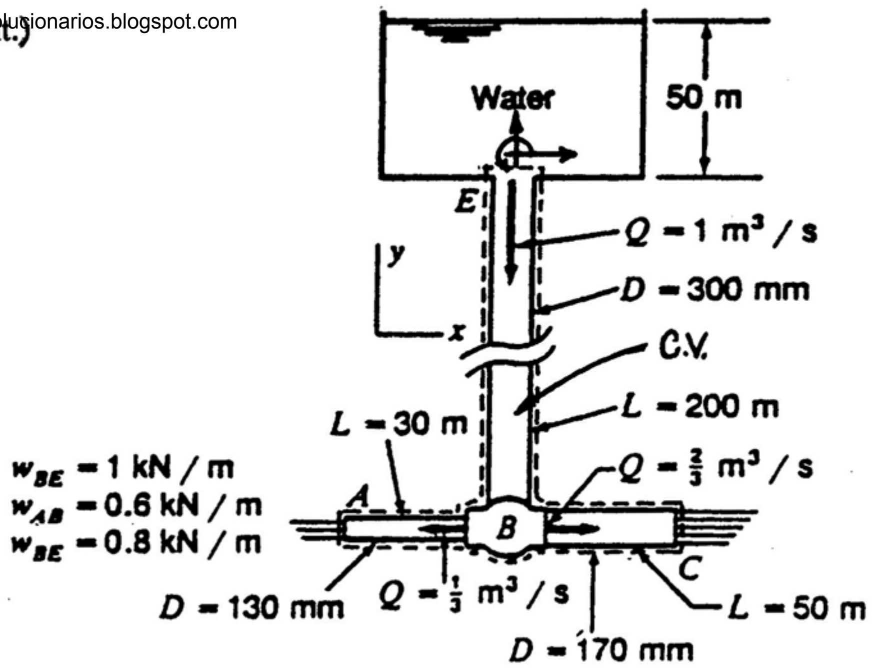


**Momentum in $x$ direction.**

$$\oiint_{c.s.} T_x\,dA + \iiint_{c.v.} B_x \rho\,dv = \oiint_{c.s.} V_x(\rho \vec{V}\cdot d\vec{A}) + \frac{\partial}{\partial t}\iiint_{c.v.} V_x \rho\,dv$$

$$F_x = V_C(1{,}000)V_C\left(\frac{\pi}{4}\right)(.170)^2 - V_A(1{,}000)(V_A)\left(\frac{\pi}{4}\right)(.130^2)$$

$$V_C = \frac{.667}{\frac{\pi}{4}(.170)^2} = 29.39\ m/s$$

$$V_A = \frac{.333}{\frac{\pi}{4}(.130)^2} = 25.09\ m/s$$

$$\therefore\ F_x = (29.39)^2(1{,}000)\left(\frac{\pi}{4}\right)(.170)^2 - (25.09)^2(1{,}000)\left(\frac{\pi}{4}\right)(.130)^2 = 1.125\times 10^4\ N$$

$$\boxed{K_x = -1.125\times 10^4\ N}$$


http://ingesolucionarios.blogspot.com Edu_Zegarr_ch

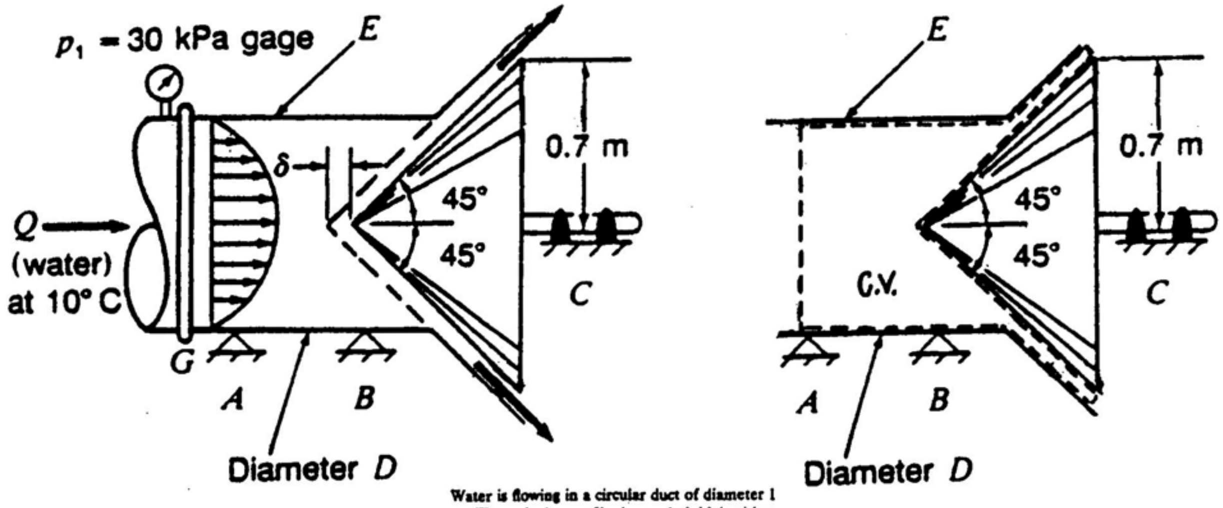


Water is flowing in a circular duct of diameter 1 m. The velocity profile is paraboloidal with a volume flow of 5000 L/s. The water flows over a 90° cone to form a conical sheet of water that then exits to the atmosphere. If $\delta = 0.1$ m, what is the total horizontal force on the ground supports *A*, *B*, and *C* from the cylinder *E* and cone *F*? Neglect hydrostatic pressure at *G*.

**Assumptions**

1. Neglect hydrostatic pressure at *G*
2. Steady, incompressible flow.
3. 1-D flow out of system.
4. Free jet exiting.

**For Duct E** $$V = V_0\left[1 - \left(\frac{r}{\frac{D}{2}}\right)^2\right]$$

$$Q = 5 = \int_0^{.5} 2\pi r\, dr \left\{V_0\left[1 - \left(\frac{r}{.5}\right)^2\right]\right\}$$

$$5 = 2\pi\ V_0 \int_0^{.5}\left(r - \frac{r^3}{.25}\right)dr = 2\pi\ V_0\left[\frac{r^2}{2} - \frac{r^4}{(4)(.25)}\right]\Bigg|_0^{.5} = 2\pi\ V_0\left[\frac{.25}{2} - .0625\right]$$

$$V_0 = 12.73\quad m/s$$

http://ingesolucionarios.blogspot.com

(cont.)

**Geometry**

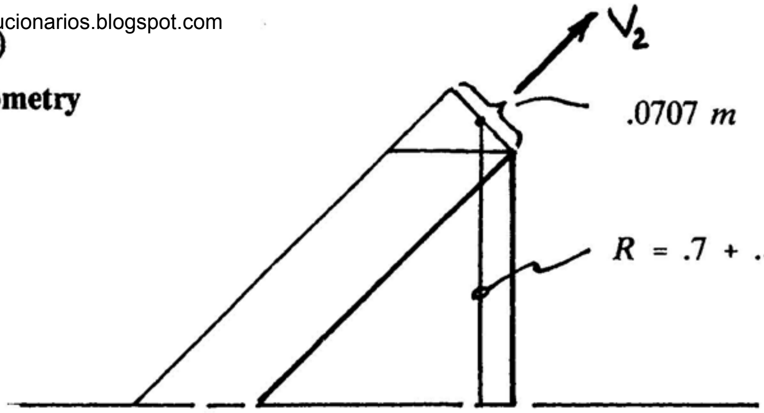


**Continuity** $(999.7)(5.00) = [2\pi(.7250)][.0707]((999.7)(V_2)$ $\qquad V_2 = 15.53\ \ m/s$

**Linear momentum** $\oint\!\!\!\oint T_x dA + \iiint B_x \rho\, dv = \iint V_x \rho \vec{V}\cdot d\vec{A} + \frac{\partial}{\partial t}\iiint V_x \rho\, dv$

$$(30{,}000)\left(\frac{\pi}{4}\right)(1^2) + R_x = -\int_0^{.5} 12.73^2\left[1 - \left(\frac{r}{.5}\right)^2\right]^2 (2\pi r)(999.7)dr$$

$$+ (15.53)(.707)(999.7)(5.0)$$

$$2.356\times 10^4 + R_x = \int_0^{.5} 12.73^2\left[1 - \left(\frac{r}{.5}\right)^2\right]^2 (2\pi)(r)(999.7)dr + 5.49\times 10^4$$

$$R_x = 3.134\times 10^4 + 1.018\times 10^6\left[\frac{.5^2}{2} - 2\,\frac{(.5)^4}{(4)(.5)^2} + \frac{.5^6}{(6)(.5)^4}\right]$$

$$R_x = 4.424\times 10^4\ \ N$$

$$K_x = -4.242\times 10^4\ \ N$$


http://ingesolucionarios.blogspot.com Edu_Zegarr_ch

http://ingesolucionarios.blogspot.com

4.34

Five-hundred liters of water per second flow through the pipe shown. The flow exits through a rectangular area of length 0.8 m and width of 40 mm. The velocity profile is that of a parabola. The pipe weighs 1000 N/m and has an inside diameter of 250 mm. What are the forces on the pipe at $A$? The entering pressure $p_1$ is 100 kPa gage.

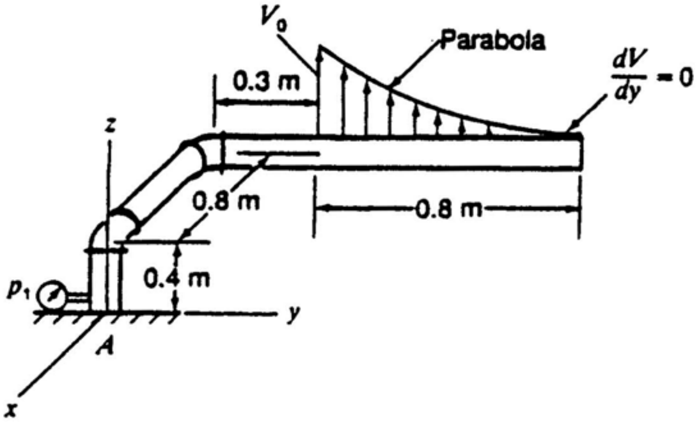


| Assumptions: |
|---|
| 1. Steady flow. |
| 2. 1-D flow into pipe. |
| 3. Free jet coming out. |

Equation of Parabola:

$$V = Ay^2 + By + C \qquad when \begin{cases} y = .3 & V = V_0 \\ y = 1.1 & V = 0 \\ y = 1.1 & dV/dx = 0 \end{cases}$$

$$V_0 = A(.09) + B(.3) + C \tag{1}$$

$$0 = A(1.1)^2 + B(1.1) + C \tag{2}$$

$$0 = 2.2A + B \tag{3}$$

$$\therefore \quad B = -2.2A$$

Subtract (2) from (1). Replace $B$ $\qquad V_0 = (.09 - 1.1^2)A + (-2.2A)(.3 - 1.1)$

$$\therefore \begin{cases} A = 1.5625 V_0 \\ B = -3.4375 V_0 \\ C = 1.8906 V_0 \end{cases}$$

$$\therefore \quad V = [1.5625y^2 - 3.4375y + 1.8906]V_0$$

Find $V_0$ by continuity:



http://ingesolucionarios.blogspot.com Edu_Zegarr_ch

http://ingesolucionarios.blogspot.com
(cont.)

$$.500 = \int_{.3}^{1.1} [1.5625y^2 - 3.4375y + 1.8906] V_0 (.040) dy$$

$$.500 = V_0(.04)\left[1.5625\frac{y^3}{3} - 3.4375\frac{y^2}{2} + 1.8906y\right]\Big|_{.3}^{1.1}$$

$$V_0 = 46.88 \text{ m/s}$$

**Linear momentum equation:** $\oiint \vec{T} dA + \iiint \vec{B}\rho dv = \iint \vec{V}(\rho \vec{V}\cdot d\vec{A}) + \frac{\partial}{\partial t}\iiint \vec{V}\rho dv$

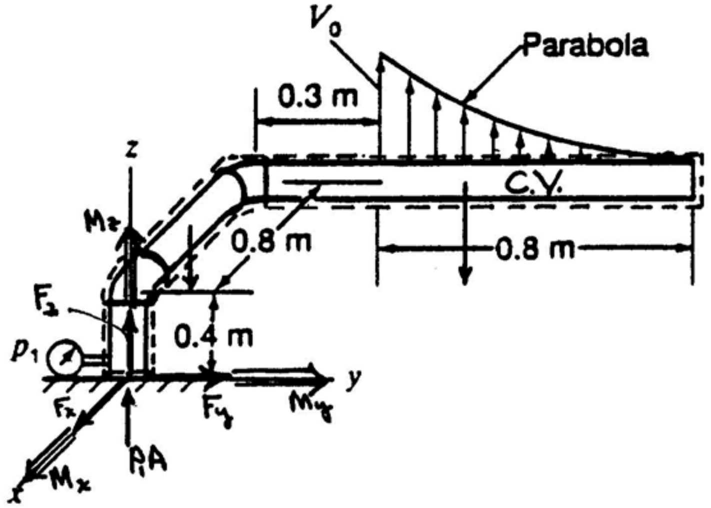


$$(100{,}000)\left(\frac{\pi}{4}\right)(.250)^2\hat{k} + F_x\hat{i} + F_y\hat{j} + F_z\hat{k} + \left[\left(\frac{\pi}{4}\right)(.250)^2(9{,}806)(2.3) + (1{,}000)(2.3)\right](-\hat{k})$$

$$= -\frac{.500}{\left(\frac{\pi}{4}\right)(.250)^2}\hat{k}(1{,}000)(.500) + \int_{.3}^{1.1}[1.5625y^2 - 3.4375y + 1.8906]^2(46.88)^2(1{,}000)(.04)dy\,\hat{k}$$

$$\therefore\ 4{,}909\hat{k} + F_x\hat{i} + F_y\hat{j} + F_z\hat{k} - 3{,}407\hat{k} = -5{,}093\hat{k} + 87{,}909\hat{k}\left[1.5625^2\frac{y^5}{5} + 3.4375^2\frac{y^3}{3}\right.$$

$$\left. - 1.8906^2 y - (2)(1.5625)(3.4375)\frac{y^4}{4} + 2(1.5625)(1.8906)\frac{y^3}{3} - 2(3.4375)(1.8906)\frac{y^2}{2}\right]_{.3}^{1.1}$$

Thus: $4{,}909\hat{k} + F_x\hat{i} + F_y\hat{j} + F_z\hat{k} - 3{,}407\hat{k} + 5{,}093\hat{k} = 14{,}064\hat{k}$

$$\therefore\ F_x = 0 \qquad F_y = 0 \qquad F_z = 7{,}469\ N$$


http://ingesolucionarios.blogspot.com Edu_Zegarr_ch

http://ingesolucionarios.blogspot.com

4.35

A control volume is moving at constant speed $V_0$. There are $n$ stationary particles per unit volume uniformly distributed, each of mass $m$. Compute the flow of mass through left face $A_1$ realizing that the formulation $\iint_{A_1}(\rho \mathbf{V} \cdot d\mathbf{A})$ must be adjusted from a continuum approach to a flow of distinct separate particles. Do same for linear momentum and kinetic energy. *Hint:* Use an approach similar to Fig. 4.16. Show that $\iint \rho \mathbf{V} \cdot d\mathbf{A} = V_0 mnA_1$.

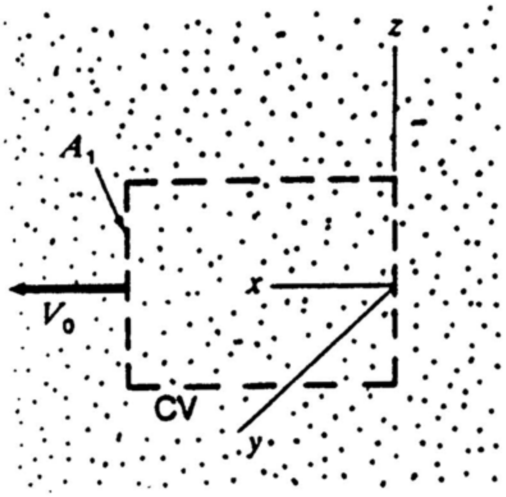


$A_1$ moves at speed $V_0$ and during time $\Delta t$ passes through a volume $V_0A_1\Delta t$. It thus passes through $V_0A_1\Delta t\ n$ molecules. The mass of molecules thus involved is $V_0A_1\Delta t\ n\ m$.

The **flow of mass** per unit time through $A_1$ is then $V_0A_1\Delta t\ m\ n/\Delta t = V_0A_1\ m\ n$. Thus:

$$\iint_{A_1} \rho \vec{V} \cdot d\vec{A} = V_0A_1\ m\ n$$

For **linear momentum**

$$\iint V_x \rho \vec{V} \cdot d\vec{A} = V_0(V_0A_1mn) = V_0^2A_1mn$$

For **kinetic energy**

$$\iint \frac{V^2}{2}(\rho \vec{V} \cdot d\vec{A}) = \frac{V_0^2}{2}(V_0A_1\ m\ n) = \frac{V_0^3}{2}A_1\ m\ n$$



http://ingesolucionarios.blogspot.com Edu_Zegarr_ch

http://ingesolucionarios.blogspot.com

A light plane is moving through a hail storm at a speed of 200 km/h. The windshield shown has an area of 0.25 $m^2$ and its normal unit vector $\mathbf{e}_n$ is

$$\mathbf{e}_n = 0.2\mathbf{i} + 0.25\mathbf{j} + 0.947\mathbf{k}$$

The hail element has a mass of 1 mg and slides off the windshield after *plastic* collision with negligible friction. There are $n = 500$ hail particles per unit volume—that is, $n = 500\ m^3$. The hail particles have vertical speed of 10 km/h downward. What is the average force on the windshield from the collisions with the hail? Do not include body force contributions. *Hint:* Choose a rectangular parallelepiped for a control volume of small thickness with the windshield as one face of the control volume.

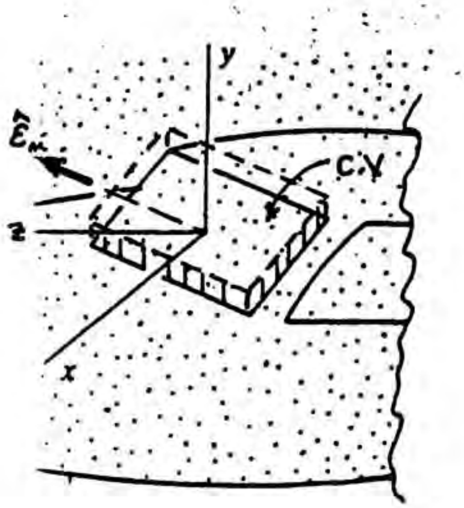


| Assumptions: |
|---|
| 1. Steady flow of particles. |
| 2. No friction. |
| 3. Neglect body force. |

**Linear momentum** (*n* direction): $\oiint_{c.s.} T_n dA + \iiint_{c.v.} B_n \rho d\upsilon = \oiint_{c.s.} V_n(\rho \vec{V}\cdot d\vec{A}) + \frac{\partial}{\partial t}\iiint \vec{V}\rho d\upsilon$

$$R_n = (\rho \vec{V}\cdot\vec{A})(V_n) = [(n)(.001)]\left\{[-200\hat{k}-10\hat{j}]\cdot(.2\hat{i}+.25\hat{j}+.947\hat{k})\left(\frac{1,000}{3,600}\right)(.25)\right\}$$

$$(-200\hat{k}-10\hat{j})\cdot(.2\hat{i}+.25\hat{j}+.947\hat{k})\left(\frac{1,000}{3,600}\right)$$

$$= (.001)(500)\left(\frac{1,000}{3,600}\right)(.25)[-189.4-2.5][-189.4-2.5]\left(\frac{1,000}{3,600}\right)$$

$$R_n = 355 \quad N$$

$$\boxed{K_n = -355 \quad N}$$

http://ingesolucionarios.blogspot.com

Edu_Zegarr_ch

http://ingesolucionarios.blogspot.com

4.37

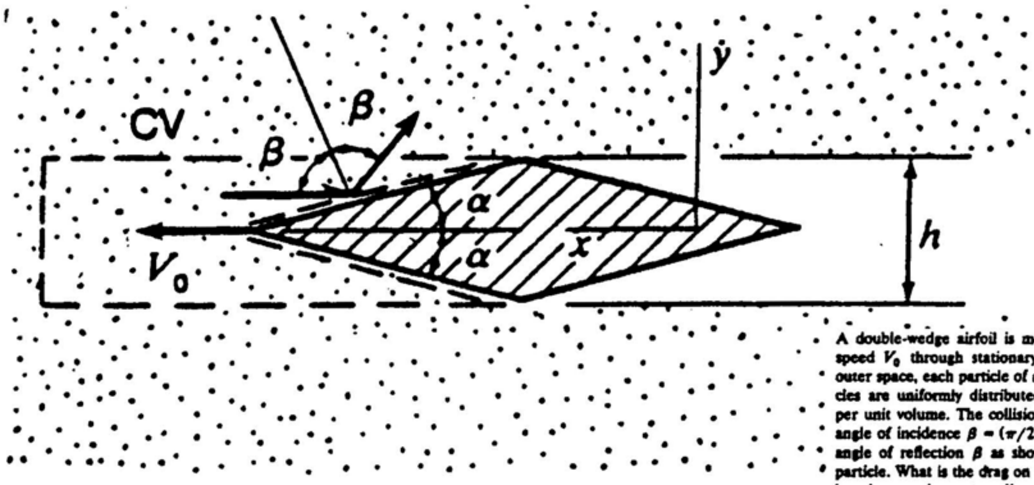


A double-wedge airfoil is moving at very high speed $V_0$ through stationary dust particles in outer space, each particle of mass $m$. The particles are uniformly distributed with $n$ particles per unit volume. The collisions are elastic with angle of incidence $\beta = (\pi/2 - \alpha)$ equal to the angle of reflection $\beta$ as shown for a colliding particle. What is the drag on the airfoil per unit length assuming a two-dimensional approach? See Prob. 4.35 before doing this problem and use a control volume such as is shown

**Continuity:**

$$\oiint \rho \vec{V} \cdot d\vec{A} = 0$$

$$\therefore \quad -nV_0(1)(h)m + (EFFLUX)_{MASS} = 0$$

$$(EFFLUX)_{MASS} = mnhV_0$$

**Linear momentum:**

$$\oiint T_x dA + \iiint B_x \rho dv = \oiint V_x(\rho \vec{V} \cdot d\vec{A}) + \frac{\partial}{\partial t}\iiint V_x \rho dv$$

$$R_x = (-V_0)(-mnV_0h) + (V_0 \cos 2\beta)(mnhV_0)$$

$$R_x = mnV_0^2h + mnV_0^2h\cos 2\beta$$

$$R_x = mnV_0^2h(1 + \cos 2\beta) = mnV_0^2h\,[1 + \cos(\pi - 2\alpha)]$$

$$R_x = mnV_0^2h[1 - \cos 2\alpha]$$

$$\therefore \quad \boxed{K_x = mnV_0^2h[\cos 2\alpha - 1]}$$


http://ingesolucionarios.blogspot.com
Edu_Zegarr_ch

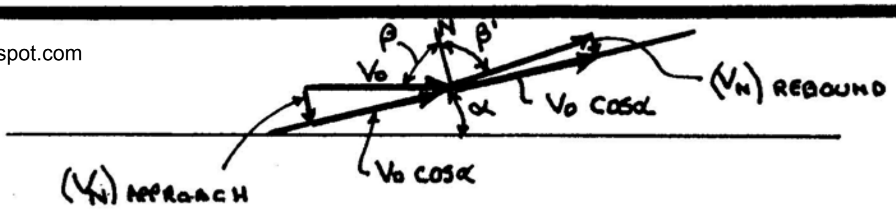


$$\beta = \left(\frac{\pi}{2} - \alpha\right) \qquad \beta' = \left[\frac{\pi}{2} - \tan^{-1}\frac{(V_N)_{REBOUND}}{V_0\cos\alpha}\right] = \left[\frac{\pi}{2} - \tan^{-1}\frac{\epsilon(V_N)_{APPROACH}}{V_0\cos\alpha}\right]$$

**Continuity:** $\oiint \rho \vec{V}\cdot d\vec{A} = 0$

$$(n)(V_0)(1)(h)(m) = (EFFLUX)_{MASS} \qquad (1)$$

**Linear momentum:** $\oiint_{c.s.} T_x dA + \iiint_{c.v.} B_x \rho dv = \oiint_{c.s.} V_x(\rho \vec{V}\cdot d\vec{A}) + \frac{\partial}{\partial t}\iiint_{c.v.} V_x \rho dv$

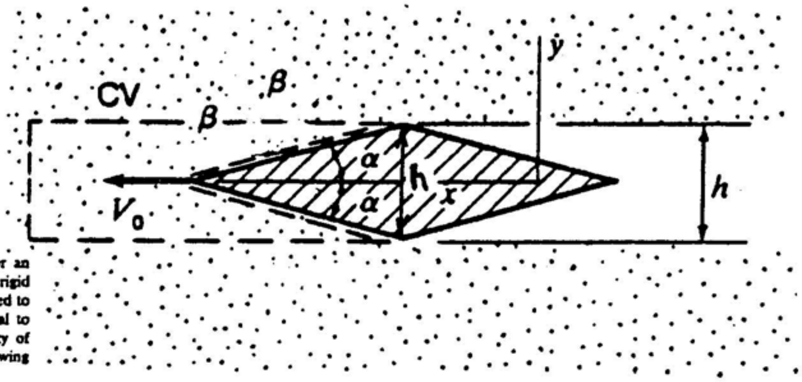


You learned in particle mechanics that for an inelastic collision of a particle with a large rigid body, the coefficient of restitution $\epsilon$ is related to the velocity of approach component normal to the surface of a rigid body to the velocity of rebound normal to the surface by the following simple relation:

$$\epsilon = -\frac{(V_N)_{rebound}}{(V_N)_{approach}}$$

Do the preceding problem with a coefficient of restitution $\epsilon$ for all collisions.

$$R_x = -(V_0)(-nhmV_0) + V_0\cos(\beta + \beta')\underbrace{(nV_0hn)}_{(EFFLUX)_{MASS}}$$

$$R_x = V_0^2 nhm + V_0\cos\left[\frac{\pi}{2} - \alpha + \frac{\pi}{2} - \tan^{-1}\frac{\epsilon V_0 \sin\alpha}{V_0\cos\alpha}\right](nV_0hn)$$

$$\therefore \quad R_x = V_0^2 nhm[1 + \cos(\pi - \alpha - \tan^{-1}(\epsilon \tan\alpha)]$$

$$R_x = V_0^2 nhm[1 - \cos(\alpha + \tan^{-1}(\epsilon\tan\alpha)]$$

$$\boxed{K_x = V_0^2 nhm[\cos(\alpha + \tan^{-1}(\epsilon\tan\alpha) - 1]}$$

Check: Let $\epsilon = 1$

$$K_x = V_0^2 nhm[\cos(\alpha + \tan^{-1}(\tan\alpha) - 1] = V_0^2 nhm[\cos 2\alpha - 1]$$

http://ingesolucionarios.blogspot.com

4.39

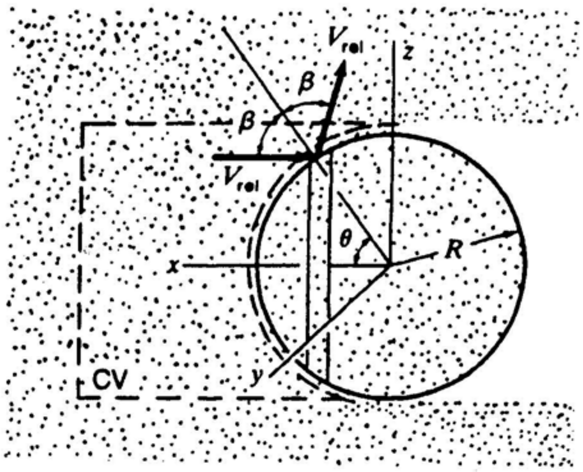


A spherical communications satellite is moving in outer space with a speed 20 or more times the speed of sound (i.e., a high Mach number). Molecules of mass $m$ move at the speed of sound. Because of the speed disparity between satellite and molecule, we will assume molecules are stationary and that the satellite moves with speed $V_0$ hitting molecules in front of it. We will assume that the collisions are elastic so that the angle of incidence $\alpha$ equals the angle of reflection $\beta$ (remember optics?). Using a control volume fixed to the satellite as shown, compute the *drag*. The molecules each have a mass $m$. There are $n$ molecules per unit volume. Make use of strips shown, integrating from $\theta = 0$ to $\theta = \pi/2$. The radius of the sphere is $R$. Because we do not have continuum, we have no pressure as such; only the collision of discrete molecules with the satellite surface. See Prob. 4.35 before proceeding.

Assumptions have already been made in the problem statement. For **linear momentum** for steady flow through the indicated control volume, we have:

$$\oiint_{c.s.} T_x dA + \iiint_{c.v.} B_x \rho\, dv = \oiint_{c.s.} V_x \rho \vec{V}\cdot d\vec{A} + \frac{\partial}{\partial t}\iiint_{c.v.} V_x \rho\, dv$$

$$R_x = (-V_0)[-V_0 \pi R^2)(mn)] + \int_0^{\frac{\pi}{2}} (-V_0 \cos 2\theta)[(R\, d\theta \cos\theta)(2\pi R \sin\theta) V_0 mn$$

$$R_x = V_0^2 \pi R^2 mn - 2V_0^2 \pi R^2 mn \int_0^{\frac{\pi}{2}} \cos 2\theta \sin\theta \cos\theta\, d\theta$$

$$= V_0^2 \pi R^2 mn - 2V_0^2 \pi R^2 mn \int_0^{\frac{\pi}{2}} \cos 2\theta \,\frac{\sin 2\theta}{2}\, d\theta$$

$$= V_0^2 \pi R^2 mn - 2V_0^2 \pi R^2 mn \left(\frac{1}{2}\right)\left[-\frac{1}{8}\cos 4\theta\right]_0^{\frac{\pi}{2}}$$

$$= V_0^2 \pi R^2 mn - 2V_0^2 \pi R^2 mn \left(-\frac{1}{16}\right)[\cos 2\pi - \cos 0]$$

$$\therefore \quad R_x = V_0 \pi R^2 mn$$

$$\therefore \quad \boxed{K_x = -V_0 \pi R^2 mn}$$



http://ingesolucionarios.blogspot.com Edu_Zegarr_ch

http://ingesolucionarios.blogspot.com

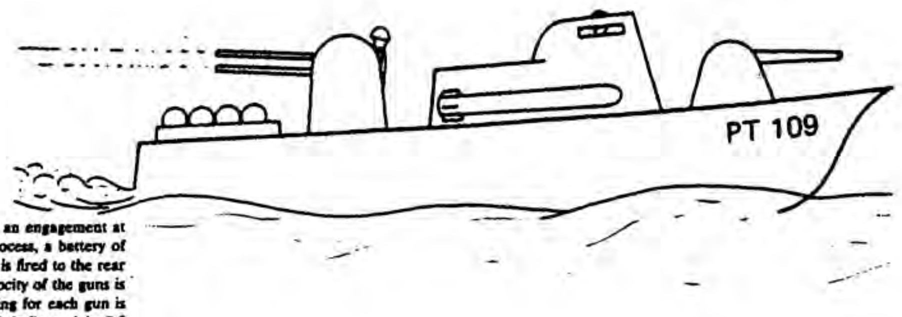


A light attack boat is leaving an engagement at full speed. To help in the process, a battery of four 50-calibre machine guns is fired to the rear continuously. The muzzle velocity of the guns is 1000 m/s and the rate of firing for each gun is 3000 rounds per minute. Each bullet weighs 0.5 N. The ship weighs 440 kN. What is the additional thrust from the guns when the boat has attained constant speed of 40 knots? Neglect the change of total mass of the boat and its contents.

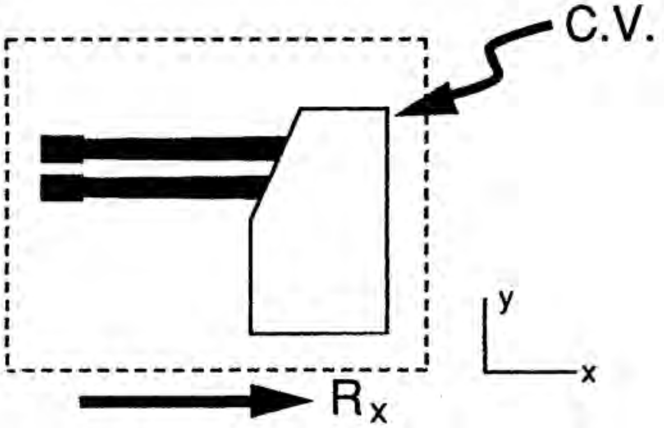


We take the gun as the control volume. The momentum equation in the $x$ direction is as follows:

$$R_x = -V_x\left[-\left(\frac{.5}{9}\right)\left(\frac{3,000}{60}\right)4\right] = (1,000)\left(\frac{.5}{g}\right)\left(\frac{3,000}{60}\right)(4) = 10,194\ N$$

Hence the thrust $T$ from the guns is:

$$T = 10.194\ kN$$

http://ingesolucionarios.blogspot.com

A jet plane is on the runway after touching down. The pilot puts into play movable vanes so as to achieve a reverse thrust from his two engines. Each engine takes in 40 kg of air per second. The fuel-to-air ratio is 1 to 40. If the exit velocity of the combustion products is 800 m/s relative to the plane, what is the total reverse thrust of the airplane if it is moving at the instant of interest at a speed of 150 km/h? The deceleration of the plane will not be great, so that little error is incurred if you consider your control volume to be an inertial control volume. The exit jets are close to atmospheric pressure.

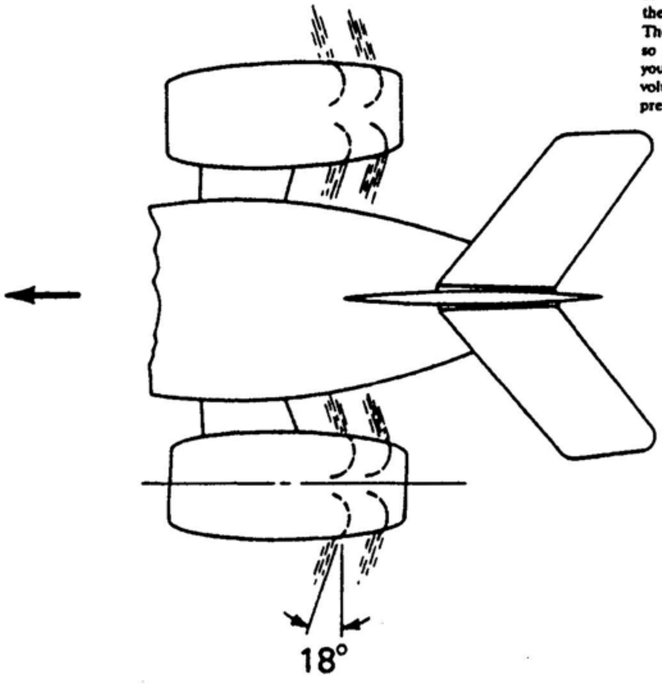


Choose a control volume that just touches the inside surface of the engine. The **momentum** equation in the $x$ direction then stipulates that on using gauge pressures:

$$R_x = -(\rho Q)_{air} V_1 + (\rho Q)_{comb.prod.}(-V_2)\sin 18° = -(40)(150)\left(\frac{1{,}000}{3{,}600}\right) - (41)(800)\sin 18°$$

$$= -11{,}802\ N$$

*Total Reverse Thrust* = 23,604 $N$

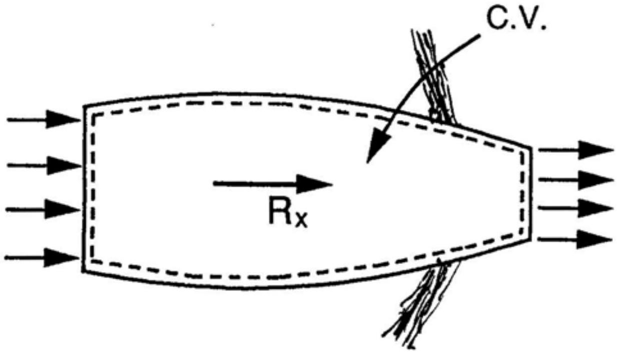


http://ingesolucionarios.blogspot.com
Edu_Zegarr_an

 http://ingesolucionarios.blogspot.com

Water flows over a dam into a rectangular channel of width $b$. Beyond the bottom of the dam, the depth of flow $h_1$ is 3 ft. As you may have seen yourself on viewing rapid channel flow, the water changes elevation to height $h_2$ as it passes through a highly disturbed region called the *hydraulic jump*. If we assume one-dimensional flows at ① and at ②, what is the height $h_2$? The velocity $V_1$ is 25 ft/s. Use only continuity and linear momentum equations in your analysis, and take the pressures at ① and ② as hydrostatic. Neglect friction at the channel bed and walls.

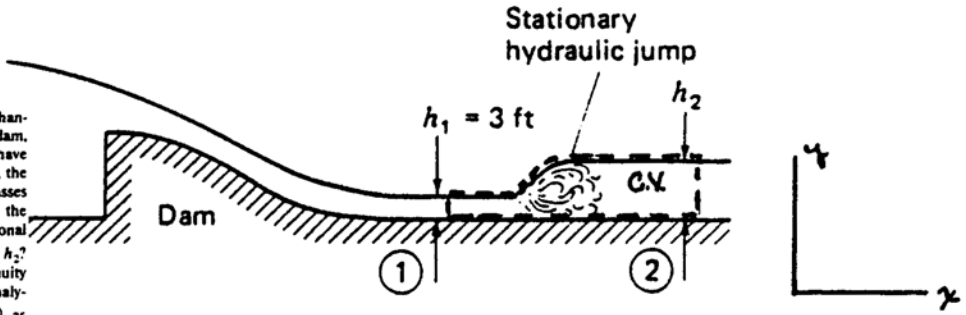


From **continuity:**

$$bh_1V_1 = bh_2V_2 \qquad \text{(a)}$$

$$(3)(25) = h_2V_2$$

From **linear momentum** in $x$ direction using hydrostatic pressure

$$\left(\gamma\,\frac{h_1}{2}\right)(h_1 b) - \gamma\left(\frac{h_2}{2}\right)(h_2 b) = -V_1(\rho V_1 b h_1) + V_2(\rho V_2 b h_2)$$

Inserting values we get:

$$(62.4)\left(\frac{3^2}{2}\right) - (62.4)\left(\frac{h_2^2}{2}\right) = \frac{(-62.4)}{g}(25^2)(3) + \left(\frac{62.4}{9}\right)(V_2^2)(h_2) \qquad \text{(b)}$$

From Eq. (a), $V_2 = \dfrac{75}{h_2}$ . Substitute into (b).

$$\frac{9}{2} - \frac{h_2^2}{2} = -\frac{(3)(25^2)}{32.2} + \left(\frac{75^2}{h_2^2}\right)\left(\frac{h_2}{32.2}\right)$$

$$h_2^3 - 125.5h_2 + 349 = 0$$

Solve by trial and error.

$$h_2 = 3 \;\; ; \;\; h_2 = 9.40$$

We use the second result:

$$\boxed{h_2 = 9.40\ ft}$$

http://ingesolucionarios.blogspot.com Edu_Zegarra_ch 

http://ingesolucionarios.blogspot.com

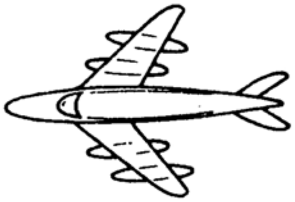

An airplane is moving at a constant speed of 600 m/h. Each of its four jet engines has an inlet area of 10 ft$^2$ and an exit area of 3 ft$^2$. The fuel-to-air ratio is 1 to 40. The exit velocity of the combustion products is 6000 ft/s relative to the plane at a local gage pressure of 4 lb/in$^2$. The plane is at 40,000 ft where the air density is 0.000594 slugs/ft$^3$. What is the drag of the airplane?

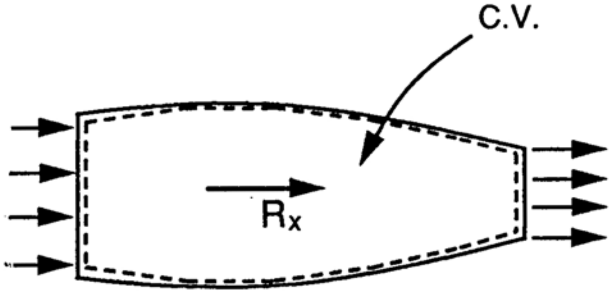


Consider one of the jet engines. Use a control volume over the inside surface of the engine as shown. The **linear momentum** equation for control volume becomes, on using gauge pressures,

$$R_x - (p_{exit})_g(3) = -V_1^2(\rho_1 A_1) + V_2[(\rho_1 V_1 A_1)(1 + \frac{1}{40})]$$

$$R_x - (4)(144)(3) = -\left[600\left(\frac{5{,}280}{3{,}600}\right)\right]^2(.000594)(10)$$

$$+ (6{,}000)\left[600\left(\frac{5{,}280}{3{,}600}\right)(.000594)(10)\left(1 + \frac{1}{40}\right)\right]$$

$$R_x = 29{,}300 \ lb$$

For four engines we have

$$\boxed{DRAG = 117{,}100 \ lb}$$


http://ingesolucionarios.blogspot.com
Edu_Zegarr_ch

 http://ingesolucionarios.blogspot.com

In Prob. 4.43 consider the drag $D$ of the plane to be proportional to the velocity squared. What would the speed of flight be for the plane if two engines conk out and the fuel-to-air ratio is kept the same as in the previous problem? The computed thrust per engine in the previous problem was found to be 29,300 lb. Assume that the exit pressure for combustion products remains at 4 lb/in² gage.

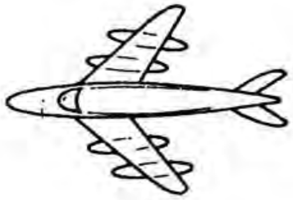

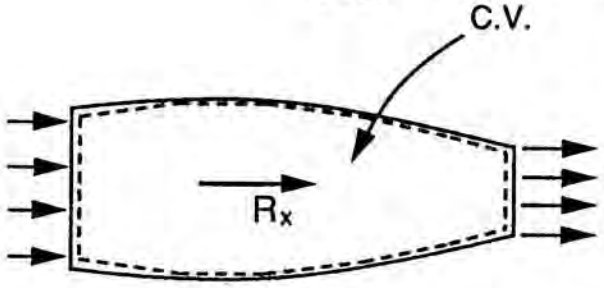


$$D \propto V^2 \qquad \therefore \quad D = CV^2$$

When $V = (600)\left(\frac{5{,}280}{3{,}600}\right)$ *ft*/sec , $D = (29{,}300)(4)$ . Hence we can solve for $C$ . Thus

$$(4)(29{,}300) = C\left[(600)\ \frac{5{,}280}{3{,}600}\right]^2 \qquad C = .1513\ \frac{lb}{(ft/\text{sec})^2}$$

Now compute the velocity using only two engines. The drag for plane is now given as $.1513\ V^2$ and so the thrust per operating engine is $\frac{1}{2}(.1513)V^2$ . The **linear momentum** equation in the $x$ direction for the control volume of the preceding solution is:

$$\frac{1}{2}(.1513\,V_1^2) - (4)(144)(3) = -V_1^2(\rho_1 A_1) + V_2[\rho_1 V_1 A_1]\left[1 + \frac{1}{40}\right]$$

Substituting numerical values, we get:

$$\frac{.1513}{2}V_1^2 - 1{,}728 = -V_1^2(.000594)(10) + 6{,}000[(.000594)(V_1)(10)]\left(1 + \frac{1}{40}\right)$$

$$\therefore \quad .0816V_1^2 - 36.5V_1 - 1728 = 0$$

$$V_1^2 - 447V_1 - 21{,}179 = 0$$

Use the quadratic formula:

$$V_1 = \frac{447 \pm \sqrt{447^2 + (4)(21{,}179)}}{2} = 490\ ft/\text{sec} = \boxed{334\ mph}$$

4.45 http://ingesolucionarios.blogspot.com

The drag on the plane when $\theta = 60°$ is first considered. Considering the plane as a free body we have:

$$T = D + W\cos 30° = D + (130\times10^3)(.866) \qquad \text{(a)}$$

Now using the engine system as a control volume from inlet to exhaust, we can say from the **linear momentum** equation in the direction of flight:

$$R_x = -\left(\frac{950\times10^3}{3,600}\right)(450) + (1,825)\left[(450)\left(1 + \frac{1}{40}\right)\right] = 723\times10^3\ N$$

The thrust $T$ is $723\times10^3\ N$ and from (a) we get the drag $D$ as:

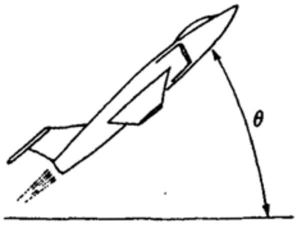


$$D = 723\times10^3 - (130\times10^3)(.866) = 610,000\ N$$

Now $\qquad D \propto V^2 \qquad D = \kappa V^2$

For initial conditions, we can say: $\quad 610,000 = \kappa\left(\frac{950,000}{3,600}\right)^2 \qquad \kappa = 8.76$

Hence: $\qquad D = 8.76V^2$

Consider free body of plane at $\theta = 20°$

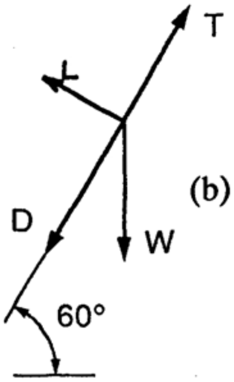


$$T = D + 130\times10^3\cos 70° = D + 44,463 \qquad \text{(b)}$$

We have for $D$ $\qquad D = 8.76V^2$

As for $T$, we again go to **linear momentum** in the direction of flight.

$$R_x = -(V)(450) + 1,825\left[(450)\left(1 + \frac{1}{40}\right)\right]$$

Hence we have for $T$ $\qquad T = 842\times10^3 - 450V \qquad \text{(c)}$

Now go to Eq. (b) and substitute from (c):

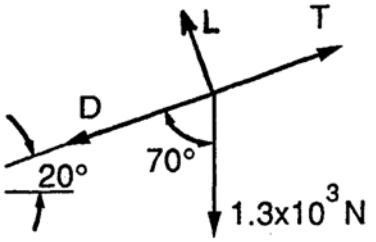


$$842\times10^3 - 450V = 8.76V^2 + 44,463$$

$$V^2 + 51.4V - 91,043 = 0$$

A fighter plane is climbing at an angle $\theta$ of 60° at constant speed of 950 km/h. The plane takes in air at a rate of 450 kg/s. The fuel-to-air ratio is 1 to 40. The exit speed of the combustion products is 1825 m/s relative to the plane. If the plane changes to an inclination $\theta$ of 20°, what will be the speed of the plane when it reaches uniform speed? The new engine settings are such that the same amount of air is taken in and the exhaust speed is the same relative to the plane. The plane weighs 130 kN. The drag force is proportional to the speed squared of the plane. The exhaust jet is at the outside pressure.

$$V = \frac{-51.4 \pm \sqrt{51.4^2 + (4)(91,043)}}{2} = 227\ m/\text{sec} = 277\left(\frac{3,600}{1,000}\right) = \boxed{998\ km/hr}$$



http://ingesolucionarios.blogspot.com Edu_Zegarr_ch

http://ingesolucionarios.blogspot.com

A train is to take on water on the run by scooping up water from a trough. The scoop is 1 m wide and skims off a 25-mm layer of water. If the train is moving at 160 km/h, how much water does it take on per second and what is the drag on the train due to this action?

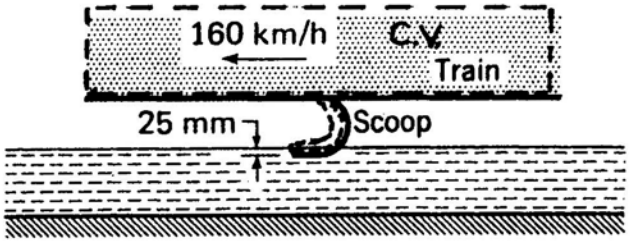


Choose a control volume which moves with the train as shown in the diagram.

**Assumptions:**

1. Incompressible flow.
2. Zero velocity in the $x$ direction for water in the tank.
3. 1-D steady flow in scoop.

The water taken on by scoop.

$$Q = \left[(160)\left(\frac{1{,}000}{3{,}600}\right)\right](1)(.025) = 1.111 \ m^3/s$$

**Momentum** equation in the $x$ direction is, using gauge pressures to take atmosphere effects into account:

$$R_x = \oint\!\!\oint_{c.s.} V_x \rho \vec{V} \cdot d\vec{A} + \frac{\partial}{\partial t} \iiint_{c.v.} V_x \rho \, dv$$

$$R_x = -(1{,}000)(1.111)\left[-(160)\left(\frac{1{,}000}{3{,}600}\right)\right] = 49{,}380 \ N = 49.38 \ kN$$

$$\therefore \quad \boxed{K_x = -49.38 \ kN}$$

Because we have used gauge pressures, this is the net force from water and air on the train. (We have neglected aerodynamic forces around the scoop.)

http://ingesolucionarios.blogspot.com

Edu_Zegarr_ch

http://ingesolucionarios.blogspot.com

Consider Example 4.1 Determine the horizontal force on the device from inside and outside fluids if on entering, the water has a uniform pressure of 25 lb/in² gage (we are neglecting hydrostatic variations) and on leaving has a uniform pressure of 13 lb/in² gage. The entering water has a paraboloidal velocity profile, but owing to the action in the device it has on exit a velocity with almost a uniform profile. Do not use a one-dimensional assumption on the inlet flow.

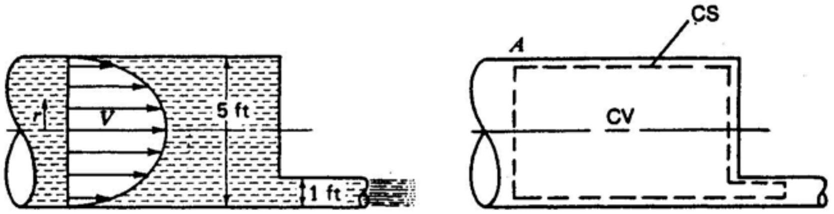


(a) (b)

**Assumptions:**

1. Incompressible, steady flow.
2. 1-D flow at right end.

The **momentum** equation in the $x$ direction is then:

$$F_x + \iiint_{C.V.} B_x \rho \, dv = \oiint_{C.S.} V_x \rho \vec{V} \cdot d\vec{A}$$

Hence, using gauge pressure:

$$(144)(25)\frac{(\pi)(25)}{4} - (144)(13)\left(\frac{\pi}{4}\right) + R_x =$$

$$-\int_0^{2.5} (6.25 - r^2)(1.938)(6.25 - r^2) 2\pi r \, dr + (1.938)(V_2^2)\left(\frac{\pi}{4}\right)$$

Using $V_2 = 78.1$ from . Ex 4.1 , we have:

$$70{,}686 - 1{,}470 + R_x = -12.18 \int_0^{2.5} (39.1r - 12.50r^3 + r^5)\, dr + 9{,}284$$

$$59{,}932 + R_x = -1{,}488 + 1{,}487 - 496 \qquad R_x = -60{,}429 \ lb$$

Taking the reaction gives us the force on the device from water.

$$\therefore \quad K_x = 60{,}429 \ lb$$


http://ingesolucionarios.blogspot.com Edu_Zegarr_ch

4.48 http://ingesolucionarios.blogspot.com

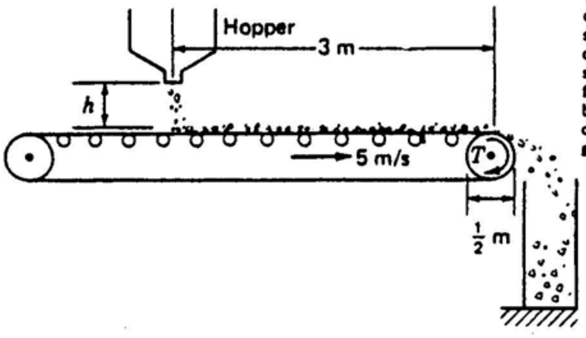


Two cubic meters per minute of gravel is being dropped on a conveyor belt which moves at the speed of 5 m/s. The gravel has a specific weight of 20 kN/m³. The gravel leaves the hopper at a speed of 1 m/s and then has an average free fall of height $h = 2$ m. What torque $T$ is needed by the conveyor to do the job? Neglect friction of rollers. *Hint:* Does the vertical motion of the gravel enter into your calculations?

Consider a control volume as shown below and consider **momentum** in the $x$ direction.

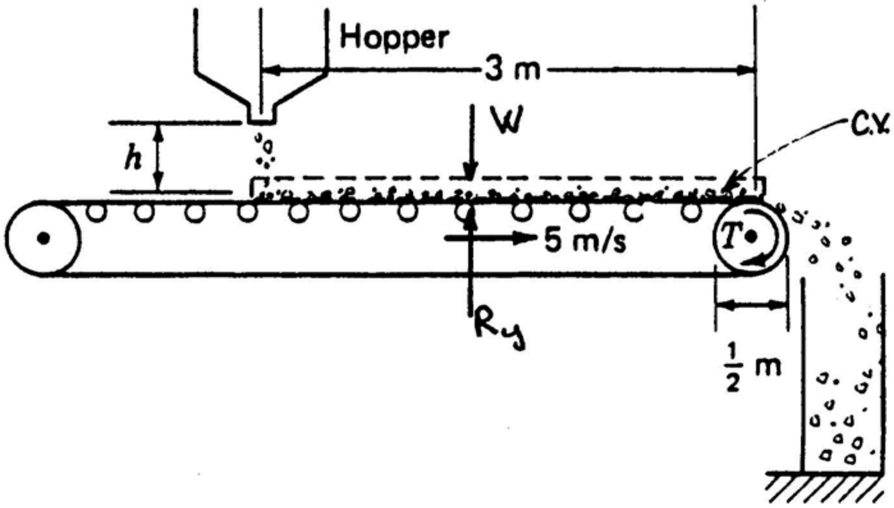


$$R_x = (\rho VA)(V) = \left(\frac{(2)(20000)}{60g}\right)(5) = 340\ N$$

Consider driving wheel. Taking moments about $O$ we have

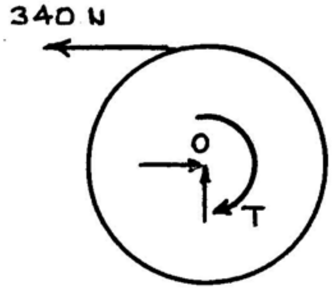


$$-T + 340\left(\frac{1}{4}\right) = 0 \qquad \therefore \quad T = 84.9\ N\text{-}m$$


http://ingesolucionarios.blogspot.com Edu_Zegarr_ch

http://ingesolucionarios.blogspot.com

In Prob. compute the total vertical force from the gravel onto the conveyor. *Hint:* You will recall from mechanics that $V = \sqrt{V_0^2 + 2gh}$ for a free fall from $V_0$ initial speed.

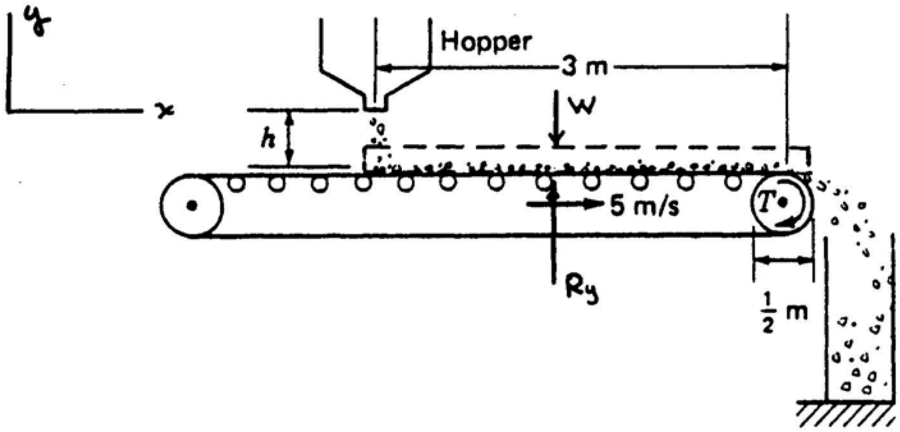


We use the same control volume as in the previous problem.

We need the vertical velocity of the gravel as it impinges on the conveyor belt.

$$V = \sqrt{1+2gh} = \sqrt{1+(2)(2.81)(2)} = 6.34 \ m/s$$

Now find $W$ the dead weight of the gravel on the conveyor. The time $\tau$ for the belt to travel $3m$ is:

$$\tau = \frac{3}{5} = .6 \text{ sec}$$

Hence the weight $W$ is: $$W = \left[\frac{(2)}{(60)} (20{,}000)\right](.6) = 400 \ N$$

Now go to the **momentum** equation in the $y$ direction. $R_y - W = (\rho VA)(V)$

$$\therefore \ R_y = 400 + \left(-\frac{2}{60g} 20{,}000\right)(-6.34) = 831 \ N$$

Taking the reaction

$$\boxed{K_y = -831 \ N}$$

We have a downward force of 831 $N$ on the conveyor.


http://ingesolucionarios.blogspot.com Edu_Zegarr_ch

http://ingesolucionarios.blogspot.com

Water issues from a large tank through a 1300-mm² nozzle at a velocity of 3 m/s relative to the cart to which the tank is attached. The jet then strikes a trough which turns the direction of flow by an angle of 30°, as is shown in Fig. P5.54. Assuming steady flow, determine the thrust on the cart which is held stationary relative to the ground by the cord.

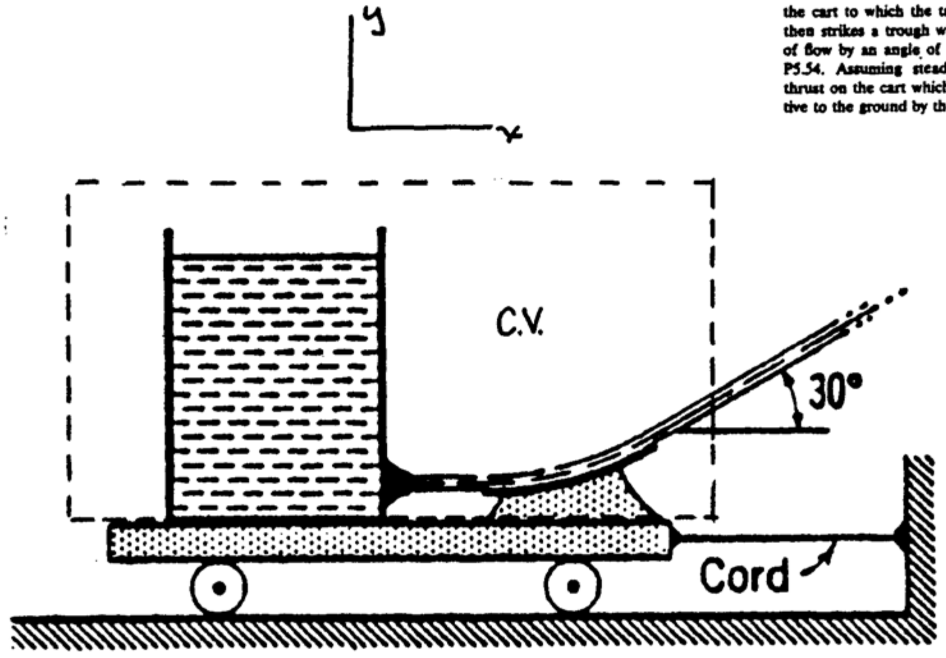


**Assumptions:**

1. Steady flow.
2. 1-D flow leaving trough.
3. Neglect gravitational effect and friction on jet.

For control volume shown:

$$R_x = (1{,}000)(3)^2(1{,}300\times10^{-6})\cos 30° = 10.13\ N$$

Taking the reaction gives us the force from the water on the system in the $x$ direction.

$$\therefore \quad \boxed{(K_x) = -10.13\ N}$$


http://ingesolucionarios.blogspot.com Edu_Zegarr_ch

http://ingesolucionarios.blogspot.com

4.51

(a) If the trough in Prob. 4.50 is moving at a uniform speed of 1.5 m/s to the right relative of the cart, what is the thrust on the cart?
(b) If, furthermore, the cart is moving to the left at a uniform speed of 9 m/s, what is the thrust on the cart?

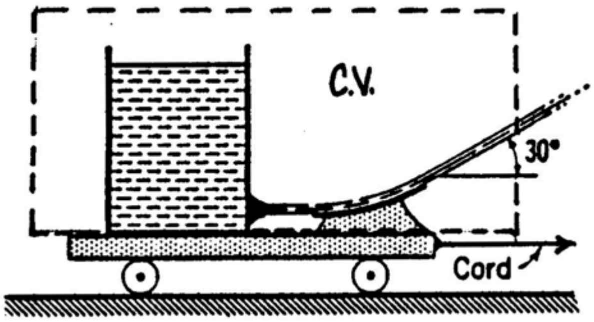


a) All we need do here is use the speed 1.5 $m$/sec instead of 3 $m$/sec in the previous problem.

$$(K_x) = -(1{,}000)(1.5)^2(1{,}300\times10^{-6})\cos30° = \boxed{-2.53\ N}$$

b) No change in results since we use an inertial control volume moving with the cart, and relative to this control volume you use same formulations as in part (a).

4.52

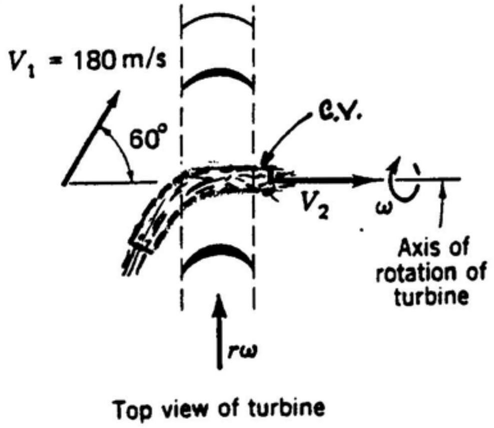


**Assumptions:**

1. Steady flow.
2. Incompressible flow.
3. Neglect friction.

A jet of air from a 50-mm nozzle impinges on a series of vanes on a turbine rotor. The turbine has an average radius $r$ of 0.6 m to the vanes and rotates at a constant angular speed $\omega$. What are the transverse force and the torque on the turbine if the air has a constant specific weight of 12 N/m³? The velocities given in Fig. are relative to the ground.

For control volume shown we compute the **momentum** equation in the $y$ direction.

$$R_y = -\rho V^2 A = -\left(\frac{12}{9.81}\right)(180^2)\left[\frac{\pi(.050)^2}{4}\right]\sin60° = -67.4\ N$$

For the reaction we get $K_x = 67.4\ N$

The **torque** on the turbine is then approximately

$$(67.4)(.6) = \boxed{40.4\ N\text{-}m}$$

http://ingesolucionarios.blogspot.com

The angle of the blade at the left side is 45°. What must the speed $\omega$ of the turbine be to admit the air most smoothly? What is the power developed by the turbine? The torque on the turbine rotor is 40.4 N · m from the previous problem.

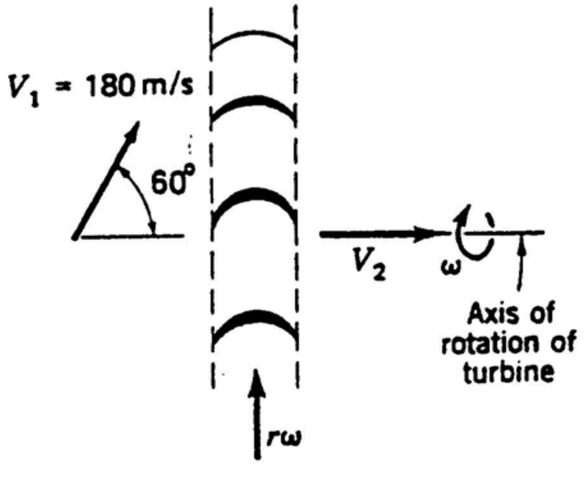


Top view of turbine

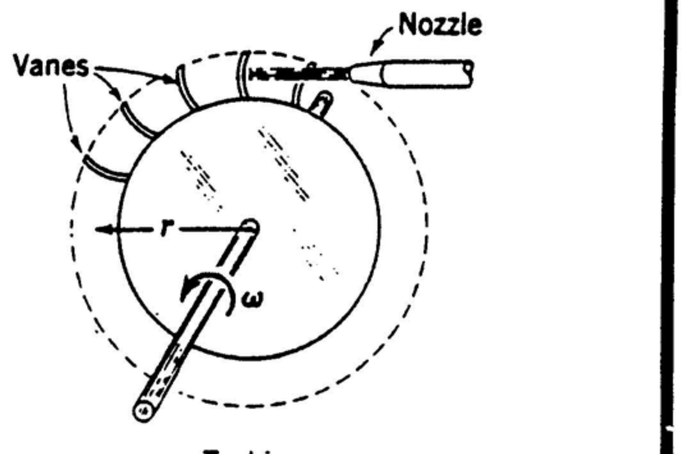


Turbine

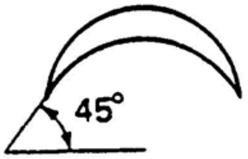


The velocity relative to the turbine blade of the air it $V_{rel}$ and is must be at the angle of **45°** as shown. Hence we have:

$$\frac{180° \sin 60° - (.6)(\omega)}{180 \cos 60°} = \tan 45° = 1$$

$$\therefore \quad \omega = \left(\frac{1}{.6}\right)(180 \sin 60° - 180 \cos 60°) = 109.8 \ rad/\text{sec} = 1{,}048 \ RPM$$

$$Power = \frac{(109.8)(40.4)}{1{,}000} = 4.44 \ kW$$

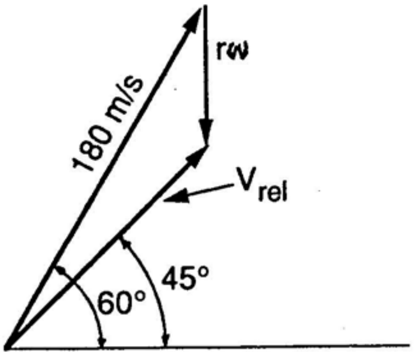

http://ingesolucionarios.blogspot.com

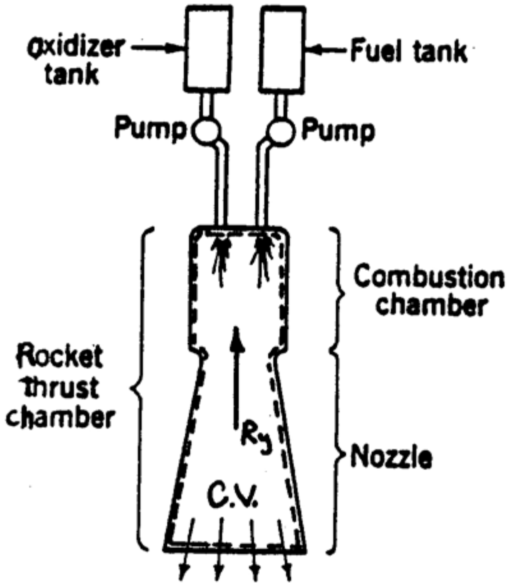

Simplified diagram of motor

Rocket exterior

A *rocket engine* is a turbomachine which differs from the turbojet engine in that it carries its own oxidizer, i.e., it is not air-breathing. An oxidizer such as nitric acid and a fuel such as aniline are burned in the combustion chamber to attain a pressure of about $2 \times 10^3$ kPa. This then expands out to a lower pressure, which is usually close to the atmosphere on leaving the nozzle. (Since the flow will be supersonic on exit, it does not have necessarily the same pressure as the surroundings, as was the case of the subsonic free jets we have been using in this chapter.) The thrust of the rocket motor is attributed to the force developed by the fluid in the rocket thrust chamber above that of the surrounding atmosphere of the rocket.

If a rocket using nitric acid and aniline on a test stand has an oxidizer flow rate of 2.60 kg/s and a fuel flow of 0.945 kg/s (hence a propellant flow rate of 3.545 kg/s) and if the flow leaves the nozzle at 1900 m/s through an area of 0.0119 m$^2$ with a pressure of 110 kPa abs., what is the thrust of the rocket motor? Neglect momentum of entering fluids.

**Assumptions:**

1. Steady flow.
2. 1-D flow on exit.
3. Neglect momentum and pressure effects of oxidizer flow and fuel flow.

The **momentum** equation in the direction of flight is:

$$R + (110\times10^3)(.0119) = -(3.545)(1{,}900) \qquad R = -8044\ N$$

The thrust from the engine is: $T = 8{,}044\ N$

If we include the atmospheric pressure on the rocket motor, we have:

$$T_{net} = 8{,}044 - (101.4\times10^3)(.0119) = \boxed{6{,}837\ N}$$


http://ingesolucionarios.blogspot.com
Edu_Zegarr_ch

http://ingesolucionarios.blogspot.com

4.55

A rocket has a propellant flow rate of 11.40 kg/s. The exit area is 0.0335 $m^2$, and the exhaust velocity is 2000 m/s relative to the nozzle at the pressure of 101.4 kPa. What is the test-stand thrust of the motor (*a*) at sea level and (*b*) in an atmosphere equivalent to standard atmosphere at 9150 m? (Read the first paragraph of Prob. 5.58 before doing this problem.)

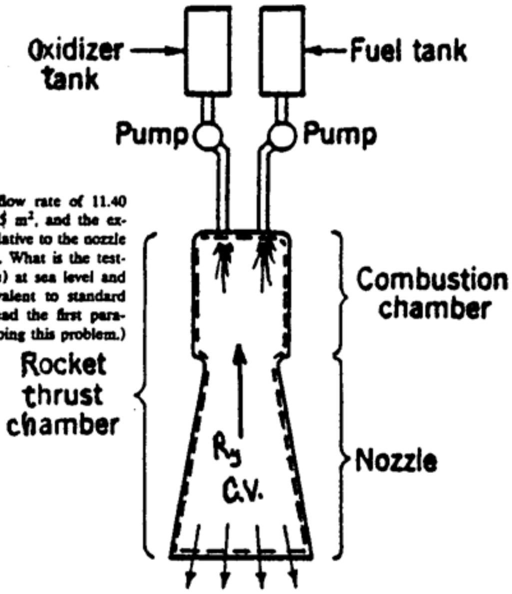


Simplified diagram of motor

Rocket exterior

**Assumptions:**

1. Steady flow.
2. 1-D flow at exit.
3. Neglect momentum and pressure effects of oxidizer flow and fuel flow.

a) Use **momentum** equation in the $y$ direction on fluid.

$$R_y + (101.4\times10^3)(.0335) = -(11.40)(2{,}000) \qquad \therefore \; R_y = 26.2 \; kN$$

Force from the air on engine is: $F_{atm} = 3.394 \; kN$

Hence $(T_y)_{net} = 22.8 \; kN$

b) The pressure of the atmosphere at $9{,}000 \; m$ is $30.8\times10^3 \; Pa$. The force from the atmosphere here is:

$$F_{atm} = (30.8\times10^3)(.0335) = 1{,}031 \; N$$

Hence the thrust becomes:

$$(T_y)_{net} = (26.2-1.031) = \boxed{25.2 \; kN}$$

http://ingesolucionarios.blogspot.com 

 http://ingesolucionarios.blogspot.com

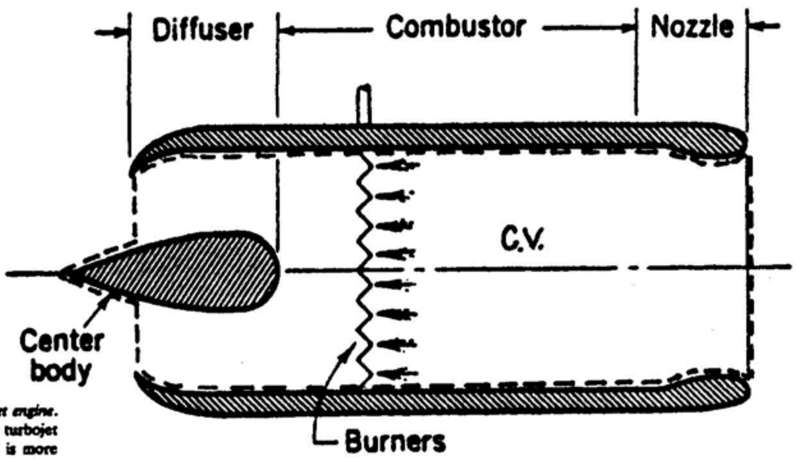


Figure shows a supersonic *ram-jet engine*. It performs the same function as the turbojet discussed in Example 5.7. However, it is more efficient than the turbojet when operated at high supersonic speeds, and it is deceptively more simple in appearance. The diffuser section slows up the flow while compressing it. Fuel is burned in the stream in the combustion zone, and the products of combustion then expand down to some pressure $p_e$ coming out of the nozzle. Because the fluid leaves at supersonic speed, the pressure $p_e$ is not necessarily that of the ambient pressure around the jet.

Assume that the ram jet is moving at a speed $V_1$ and that the effective inlet area is $A_1$. Assume that $w_f$ pound-mass of fuel is burned per unit time by the system and that the exit velocity is $V_2$ relative to the nozzle. If we disregard skin friction on the outside surface of the engine cowling, what is the thrust developed by the ram jet?

**Assumptions:**

1. Steady flow.
2. 1-D flow at inlet and outlet.

Using the control volume shown, the **continuity** equation is:

$$\rho_1 V_1 A_1 + \frac{w_f}{g_0} = \rho_2 V_2 A_2 \tag{a}$$

Now the **momentum** equation becomes, using gauge pressure

$$R_x - p_e A_2 = -\rho_1 V_1^2 A_1 + \rho_2 V_2^2 A_2$$

$$\therefore \quad R_x = p_e A_2 - \rho_1 V_1 A_1 (V_1 - V_2) + \frac{w_f}{g_0} V_2 \tag{b}$$

Wherein we have used the Eq. (a). The thrust from the internal flow is then:

$$T_x = -p_e A_2 + \rho_1 V_1 A_1 (V_1 - V_2) - \frac{w_f}{g_0} V_2$$

http://ingesolucionarios.blogspot.com

4.57

A jet of water of area $A_j$ of 2 in$^2$ and speed $V_j$ of 60 ft/s impinges on a trough which is moving at a speed $u$ of 10 ft/s. If the water divides so that two-thirds goes up and one-third goes down, what is the force on the vane?

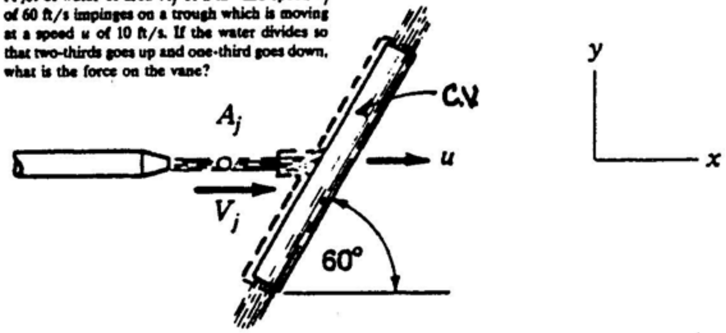


**Momentum Equation.** Use gauge pressure.

$$R_x = -(1.938)(60-10)\left(\frac{2}{144}\right)(60-10) + (1.938)(50)\left(\frac{2}{144}\right)\left(\frac{2}{3}\right)(50\cos 60°)$$

$$+ (1.938)(50)\left(\frac{2}{144}\right)\left(\frac{1}{3}\right)(-50\cos 60°) = -56.1\ lb$$

$$\therefore \quad \boxed{K_x = 56.1\ lb}$$

4.58

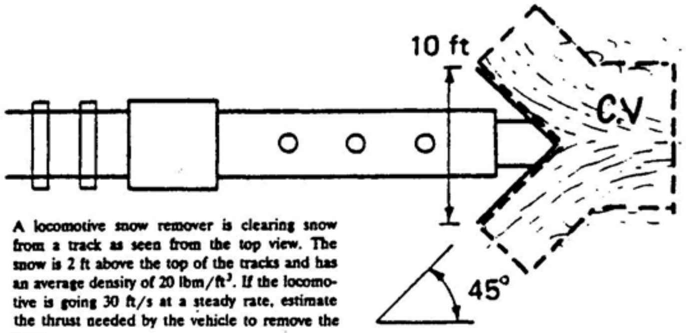


A locomotive snow remover is clearing snow from a track as seen from the top view. The snow is 2 ft above the top of the tracks and has an average density of 20 lbm/ft$^3$. If the locomotive is going 30 ft/s at a steady rate, estimate the thrust needed by the vehicle to remove the snow.

$$R_x = \rho V_1^2 A_1 - \rho V_1^2 (.707) A_1 = \rho V_1 A_1 [V_1 - V_1 \cos 45°]$$

$$= \left(\frac{20}{g_0}\right)(30)(10)(2)[30 - 30\cos 45°]$$

$$= \frac{(20)(30)(10)(2)(30)}{g_0}(.293) = 3{,}280\ lb$$

$$\boxed{Thrust = -3{,}280\ lb}$$

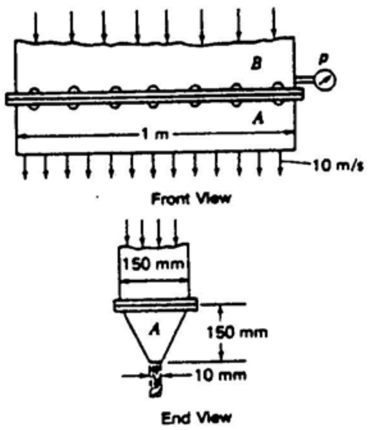


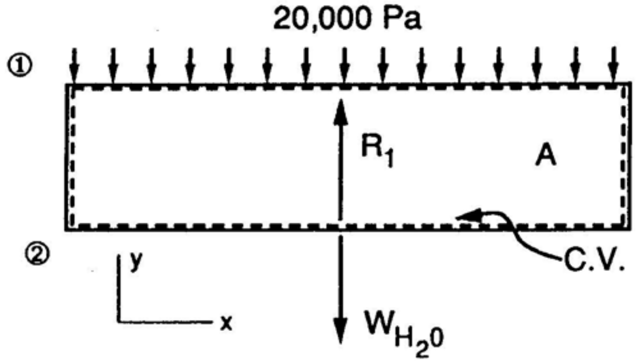


Water issues out of a triangular nozzle as a 10-mm sheet at a speed of 10 m/s. The pressure at the gage is 20 kPa gage. If the triangular nozzle weighs 500 N, what is the average force per bolt connecting *A* and *B*? The initial tension in each bolt developed by turning the nut is 50 N. There are 14 bolts.

The weight of water inside the nozzle is seen to be from the following diagram.

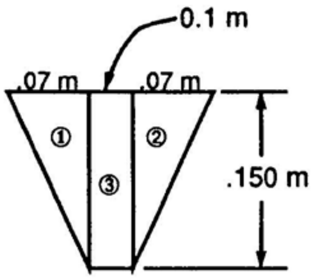


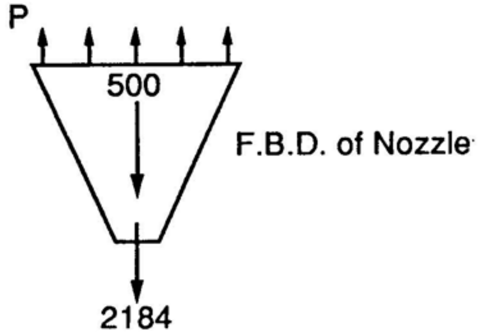


$$W_{H_2O} = (9{,}806)\left\{[(.010)(.150)(1)] + (2)(.070)(.150)\left(\frac{1}{2}\right)(1)\right\} = 117.6\ N$$

Now go to the **momentum** equation in the $y$ direction. Use gauge pressures.

$$R_1 - W_{H_2O} - (20{,}000)(1)(.150) = (1{,}000)(V_1^2)(A_1) - (1{,}000)(V_2)^2(A_2)$$

$$R_1 - 117.6 - 3{,}000 = (1{,}000)\left[\left(\frac{10}{150}\right)(10)\right]^2(.15)(1) - 1{,}000[10^2](.010)(1)$$

$$R_1 = 2{,}184\ N$$

The force on the nozzle from the water is then the reaction to $R_1$ and is $-2{,}184\ N$. Now draw a **free body diagram** of this nozzle. $P$ is the force per bolt.

$$(14)(P) = 2{,}184 + 500 \qquad P = 191.7\ N$$

The total force per bolt is then $\qquad P_{total} = 191.7 + 50 = 241.7\ N$

http://ingesolucionarios.blogspot.com

4.60

Water is pumped into a tank at the rate of 0.03 m³/s. The exit area of the pipe jet is 2000 mm², and the outside diameter of the pipe itself is 57.3 mm. The inside diameter of the tank is 1.2 m. When the water is 0.6 m above the exit of the pipe, estimate the upward force required to hold up the tank not including the weight of the tank itself. Assume the water discharges into the tank as a free jet. Be sure to state other assumptions of your analysis clearly.

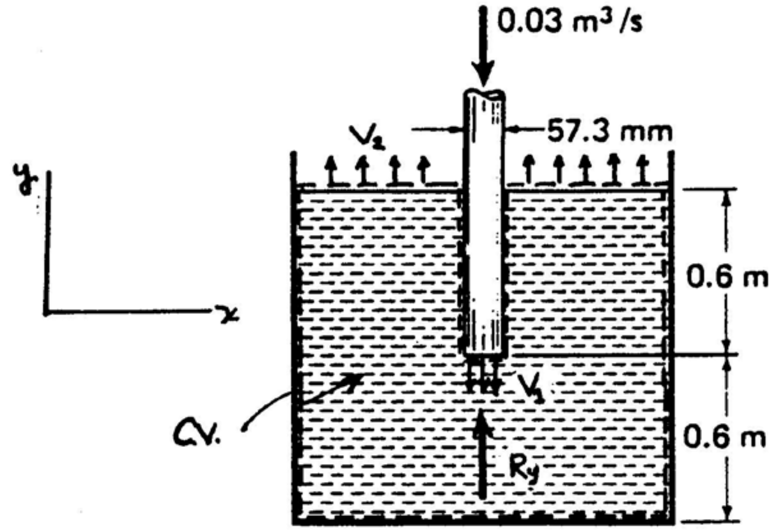


**Assumptions:**

1. Incompressible flow.
2. 1-D flow through control surface.

$$V_1 = \frac{.03}{.002} = 15.00 \ m/\text{sec}$$

The **continuity** equation for the control volume is: $\oiint_{c.s.} \vec{V}\cdot d\vec{A} = 0$

$$\therefore \quad -.03 + V_2\left[\frac{(\pi)(1.2^2)}{4} - \frac{(\pi)(.0573)^2}{4}\right] = 0 \qquad V_2 = .0266 \ m/\text{sec}$$

Now we use the **momentum** equation in the $y$ direction. Noting that $\frac{\partial}{\partial t}\iiint V_y \rho \vec{V}\cdot d\vec{A} = 0$ because the flow is incompressible, we have:

$$F_y + \rho\iiint_{c.v.} B_y dv = \rho \oiint_{c.s.} V_y \vec{V}\cdot d\vec{A}$$

$$\therefore \quad R_y - [\gamma(.6)](\pi)\left(\frac{.0573^2}{4}\right) - \gamma\frac{(\pi)(1.2)^2}{4}(1.2) + \gamma\frac{\pi(.0573^2)}{4}(.6)$$

$$= (.03)(\rho)\left(\frac{.03}{.002}\right) + \rho(A_{fs})(.0266)^2$$

http://ingesolucionarios.blogspot.com

**(cont.)**

> 3. Note we have made the additional assumption that, due to the reasonably uniform velocity of the water around the outside of the pipe, there is a hydrostatic pressure around the free jet (see 2nd. term).

Using the values

$$\begin{cases} A_{fs} = \left(\dfrac{\pi}{4}\right)(1.2^2 - .0573^2) = 1.1284 \ m^2 \\ \rho = 1{,}000 \ kg/m^3 \\ \gamma = 9{,}806 \ N/m^3 \end{cases}$$

and solving for $R_y$ : $R_y = 13{,}759 \ N$

The reaction to this force is

$$K_y = -13{,}759 \ N$$

which, if

> 4. We neglect friction on the outside of the pipe if the force from the water is on the container.

The total force on the container from air and water is:

$$\boxed{(K_y)_{net} = -13.759 \ N}$$



http://ingesolucionarios.blogspot.com Edu_Zegarr_ch

Estimate what the rate of change of the force is for the configuration given.

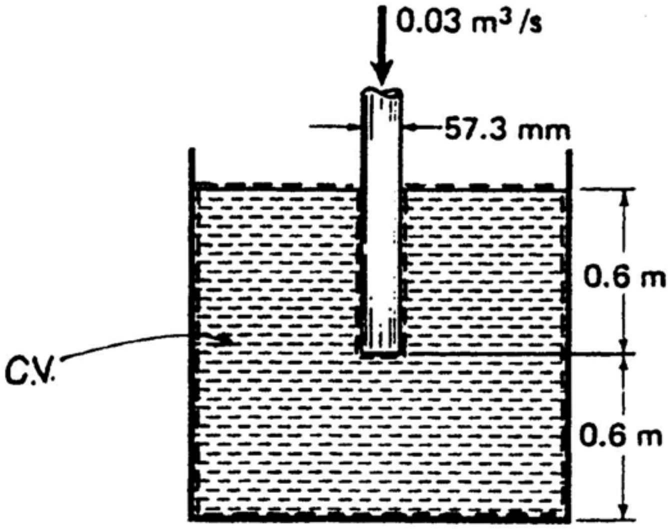


In examining the terms in the **momentum** equation of the previous problem, note there are two time dependent terms. They are W, the weight of the liquid in the container, and the pressure (taken approximately as hydrostatic) at the free jet. Hence:

$$\dot{R} = \dot{W} + \gamma \frac{dy_{fs}}{dt}(\pi)\left(\frac{.0573^2}{4}\right)$$

$$\dot{R}_y = (.03)(9{,}806) + (9{,}806)(\pi)\left(\frac{.0573^2}{4}\right)\dot{y}_{fs}$$

From **continuity**: $\dot{y}_{fs} = V_2 = .0266\ m/s$

$$\dot{R}_y = 294.9\ N/s$$

Hence

$$\boxed{\dot{K}_y = -294.9\ N/s}$$

http://ingesolucionarios.blogspot.com

4.62

In computing the thrust for rockets, ram jets, etc., we have assumed one-dimensional flow for the fluid leaving the nozzle. Actually, the flow issues out of the nozzle in a somewhat radial manner. If the exit speed is of constant magnitude $V_e$ relative to the nozzle, what is the proper expression for the linear momentum flow in the $x$ direction across the exit of the nozzle, using this flow model?

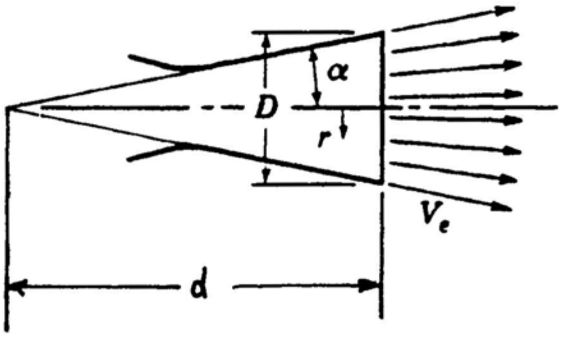


$$d = \frac{\frac{D}{2}}{\tan\alpha}$$

$$r = (d)\tan\theta = \frac{D}{2}\,\frac{\tan\theta}{\tan\alpha} \qquad \text{(a)}$$

The flow of momentum through the exit area is:

$$\iint V_x(\rho\vec{V}\cdot d\vec{A}) = \int_0^{\frac{D}{2}} (V_e\cos\theta)(\rho)(V_e\cos\theta)(2\pi r\,dr)$$

$$= \int_0^{\alpha} V_e^2(\cos^2\theta)(\rho)(2\pi)\left(\frac{D}{2}\,\frac{\tan\theta}{\tan\alpha}\right)\frac{D\sec^2\theta}{2\tan\alpha}\,d\theta$$

$$= \frac{V_e^2\rho D^2\pi}{2\tan^2\alpha}\int_0^{\alpha}\tan\theta\,d\theta = -\frac{V_e^2\rho D^2\pi}{2\tan^2\alpha}[\ln(\cos\alpha) - \ln(\cos 0)]$$

$$= \boxed{\frac{V_e^2\rho D^2\pi}{4\tan^2\alpha}\ln(\sec^2\alpha)}$$


http://ingesolucionarios.blogspot.com Edu_Zegarr_ch

4.63

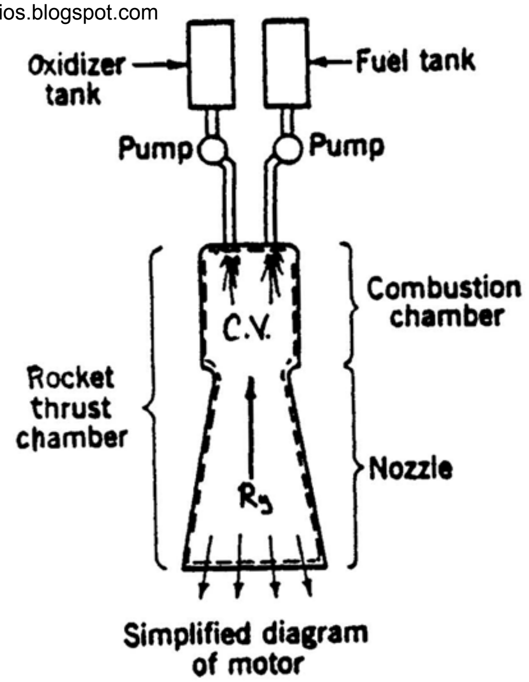


Using the model you have established in Prob. 5.66 for exit flow in a nozzle, recompute the thrust of the rocket at sea level in Prob. 5.59 for the angle $\alpha = 20°$. Retain the assumption that the exit pressure $p_e$ is uniform across the jet. *Hint:* Use the result $r = (D \tan\theta)/(2\tan\alpha)$ in your calculations for $\rho$.

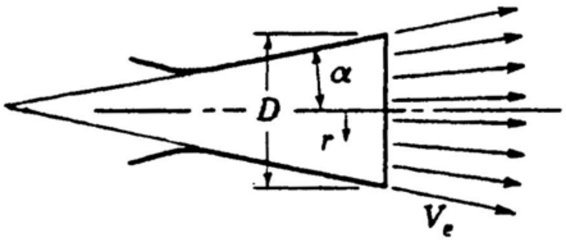


Part A.

**Momentum equation** using the result of Prob. 4.62.

$$R_y + (104{,}000 - 101{,}325)(.0335) = -\left[\rho\left(\frac{\pi D^2}{4}\right)\right]\frac{V_e^2}{\tan^2\alpha}\ \ln\sec^2\alpha \qquad (1)$$

From **continuity** equation
$$11.40 = \int_0^{\frac{D}{2}} \rho V_e \cos\theta\, 2\pi r\, dr$$

Replace $r\,dr$ using Eq. (a) of Prob. 4.62

$$r\,dr = \left(\frac{D}{2}\ \frac{\tan\theta}{\tan\alpha}\right)\left(\frac{D}{2}\ \frac{\sec^2\theta}{\tan\alpha}\ d\theta\right) = \frac{D^2}{4\tan^2\alpha}\ \tan\theta\sec^2\theta\, d\theta \qquad (3)$$

Go back to Eq. (2):

$$11.40 = \int_0^{\alpha} \rho V_e \cos\theta\, 2\pi\left[\frac{D^2}{4\tan^2\alpha}\ \tan\theta\sec^2\theta\right] d\theta = \rho V_e (2\pi)\ \frac{D^2}{4\tan^2\alpha}\int_0^{\alpha}\frac{\sin\theta}{\cos^2\theta}\ d\theta$$

$$= \rho V_e (2\pi)\frac{D^2}{4\tan^2\alpha}\left[\frac{1}{\cos\theta}\right]\Bigg|_0^{\alpha} = 2\rho\ \frac{V_e \pi D^2}{4\tan^2\alpha}\left[\frac{1}{\cos\alpha} - 1\right]$$

http://ingesolucionarios.blogspot.com

(cont.)

Solve for $\rho$ :

$$\rho = \frac{(11.40)(\tan^2\alpha)}{2V_e\left(\frac{\pi D^2}{4}\right)\left[\frac{1}{\cos\alpha} - 1\right]} = \frac{(11.40)(\tan^2 20°)}{(2)(2,000)(.0335)\left[\frac{1}{\cos 20°} - 1\right]} = .1756\ kg/m^3$$

Substitute for $\rho$ in Eq. (1) to solve for $R_y$

$$R_y = -[2,675(.0335)] - (.1756)(2,000)^2(.0335)\ \frac{1}{(\tan 20°)^2}\left[\ln\left(\frac{1}{\cos^2\alpha}\right)\right]$$

$$= -(89.61)(.0335)\ -\ 22,079\ N = -22.2\ kN$$

$$\therefore \quad \boxed{(T_y) = 22.2\ kN}$$

There is thus an error of 2.6% in neglecting divergence for this problem.

For Part B we have:

$$R_y = -(104,000 - 30,800)(.0335) - 22,079 = -24.53\ kN$$

$$T_y = 24.53\ kN$$

Error is now 2.66% .

http://ingesolucionarios.blogspot.com Edu_Zegarr_ch

http://ingesolucionarios.blogspot.com

Water is flowing over a dam Upstream the flow has an elevation of 12 m and has an average speed of 0.3 m/s, while at a position downstream the water has a fairly uniform elevation measured as 1 m. If the width of the dam is 9 m, find the horizontal force on the dam.

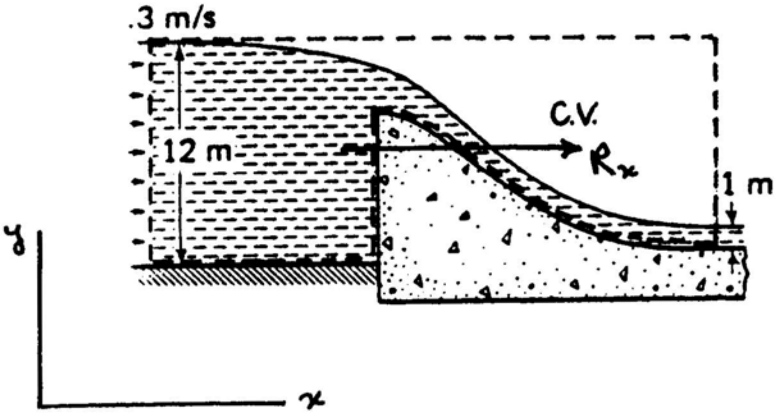


**Assumptions:**

1. Steady flow.
2. Incompressible flow.
3. 1-D flow at control surfaces.
4. Hydrostatic pressures at flows through control surfaces.
5. Neglect friction on bed of channel leading to dam.

The **momentum equation** in the $x$ direction becomes, using gauge pressures:

$$(\gamma)(6)(12)(9) - (\gamma)\left(\frac{1}{2}\right)(1)(9) + R_x = -(\rho)(.3)^2(12)(9) + (\rho)(V_2^2)(1)(9)$$

**Continuity** requires that: $V_2 = \left(\frac{12}{1}\right)(.3) = 3.60\ m/\text{sec}$

Solving for $R_x$ : $R_x = -6203\ kN$

Taking the reaction we get:

$$K_x = 6{,}203\ kN$$

http://ingesolucionarios.blogspot.com

Edu_Zegarr_ch

http://ingesolucionarios.blogspot.com

A row of identical blocks are lined up as shown. Each block weighs 5 lb and has a coefficient of dynamic friction with the ground of 0.3. A bulldozer moving at a constant speed $V_0$ of 10 ft/s is going to move these blocks to the right. If the impacts are completely inelastic (completely plastic), calculate the *average* force developed by the bulldozer as a function of time after the first block is touched. *Hint:* Consider a stationary control volume encompassing all the blocks. Then consider the average change in linear momentum per second inside the control volume. Consider linear momentum change and friction separately and then combine.

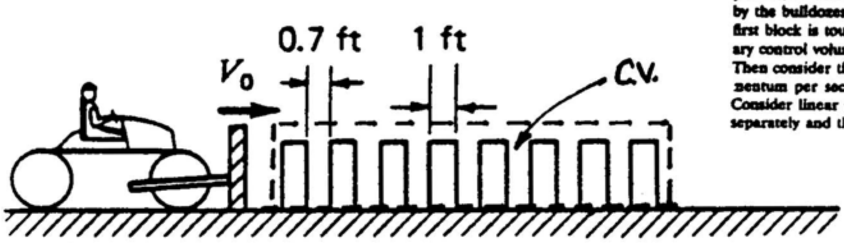


What is the time $\tau$ between contacts of blocks inside the control volume?

$$\tau = \frac{(.7)}{V_0} = .07 \text{ sec}$$

What is the change in linear momentum per contact?

$$\Delta(mV_x) = \left(\frac{5}{g}\right)(10-0) = \frac{50}{g}$$

The number of contacts per unit time is $1/\tau$. Hence the change in linear momentum per second is:

$$\left(\frac{1}{\tau}\right)(\Delta mV_x) = \left(\frac{1}{.07}\right)\left(\frac{50}{g}\right) = 22.2 \ slugs\, ft/\text{sec}^2$$

Now go to the **momentum** equation and disregard friction first. We get:

$$(R_x)_{av} = 0 + \frac{\partial}{\partial t}\iiint V_x(\rho\, dv) = 22.2 \ lb$$

This is the average force to change momentum of the blocks. Now consider **friction**. At $t=0$ the bulldozer just touches the first block. The number $n$ of blocks moving in 1 second is:

$$n = \frac{(V_0)(1)}{.7} = \frac{10}{.7} = 14.29$$

The friction at 1 second is $(n)(5)(.3) = 21.4 \ lb$. We take the average to increase linearly with time with this force added every second. Hence:

$$(F_{total})_{av} = 22.2 + 21.4t \ lb$$

with $t$ in seconds.

5.70

Wrought-iron chain is held above a wooden board so as to just touch at $t = 0$. The chain is then released and simultaneously a force $F$ is applied to the board to accelerate at a constant rate of 32.2 ft/s$^2$. If we have plastic impact between chain and wood, what function of time must $F$ be to do the task? The coefficient of dynamic friction between the board and the floor is 0.3. The chain weighs 10 lb/ft. The board weighs 5 lb. Use stationary control volume for wrought iron.

At time $t$, find $\ell$. $\qquad \ddot{x} = 32.2$

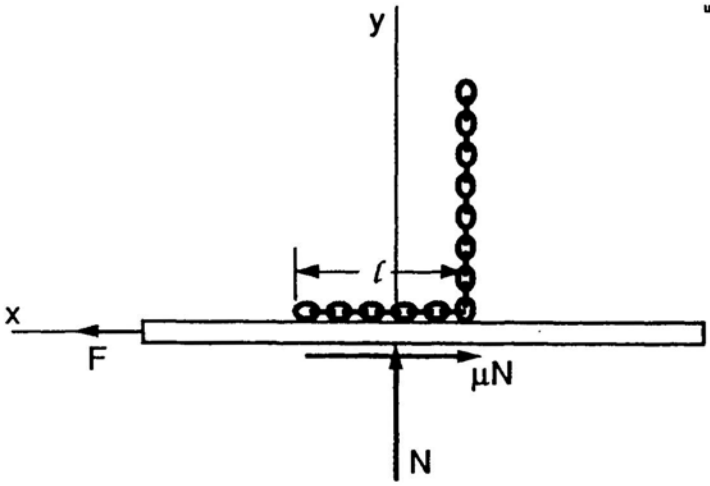


$$x = 16.1t^2 \qquad \therefore \quad \ell = 16.1t^2$$

Hence the total **dead** weight of chain and wood at time $t$ is:

$$W_{dead} = [16.1t^2](10) + 5\ lb \qquad \text{(a)}$$

Consider stationary control volume containing horizontal chain.

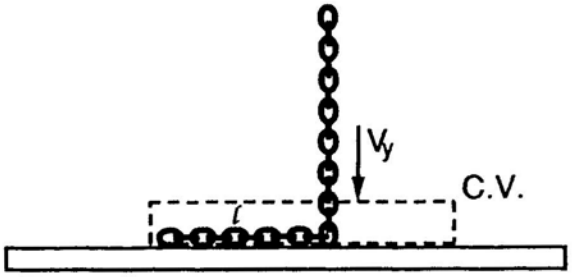


The **momentum** equation in the $y$ direction is as follows:

$$R_y = V_y\left(V_y\ \frac{w}{g}\right) = V_y^2\left(\frac{10}{32.2}\right)$$

4.66 (cont.)

To get $V_y$ note that $\ddot{y} = -32.2 \quad \therefore \quad V_y = \dot{y} = -32.2t$

Hence, $R_y = (32.2)^2(t^2)\left(\frac{10}{32.2}\right)$

The friction force is then: $\mu R_y = (.3)(32.2)(10)t^2$ (b)

Now consider **horizontal** component of **linear momentum**.

$$R_x = -(\dot{x})\left[\left(\frac{10}{g}\right)(V_y)\right] + \frac{\partial}{\partial t}\left[(\dot{x})\ell\frac{10}{g}\right] = -(32.2t)\left[\left(\frac{10}{g}\right)(32.2t)\right] + \frac{\partial}{\partial t}\left[(\dot{x})(x)\left(\frac{10}{g}\right)\right]$$

$$= -(32.2t^2)(10) + \ddot{x}\left(x\frac{10}{g}\right) + (\dot{x})^2\left(\frac{10}{g}\right) = -(32.2t^2)(10) + (32.2)(16.1t^2)\left(\frac{10}{g}\right) + (32.2)^2t^2\left(\frac{10}{g}\right)$$

$$= -322t^2 + 161.0t^2 + 322t^2 = 161.0t^2$$

The force $F$ is:

$$F = \mu_d W_{dead} + \mu_d R_y + R_x = (.3)[161.0t^2+5] + (.3)[322t^2] + 161.0t^2$$

$$\boxed{F = 306t^2 + 1.5\ N}$$

 http://ingesolucionarios.blogspot.com

Water is flowing through a pipe having an inside diameter of 6 in. Find the total moment on the pipe at the base *A* from water, air, and the weight of the pipe. The pipe weighs 10 lb/ft. The pressure at A is 10 lb/in² gage. The flow is steady.

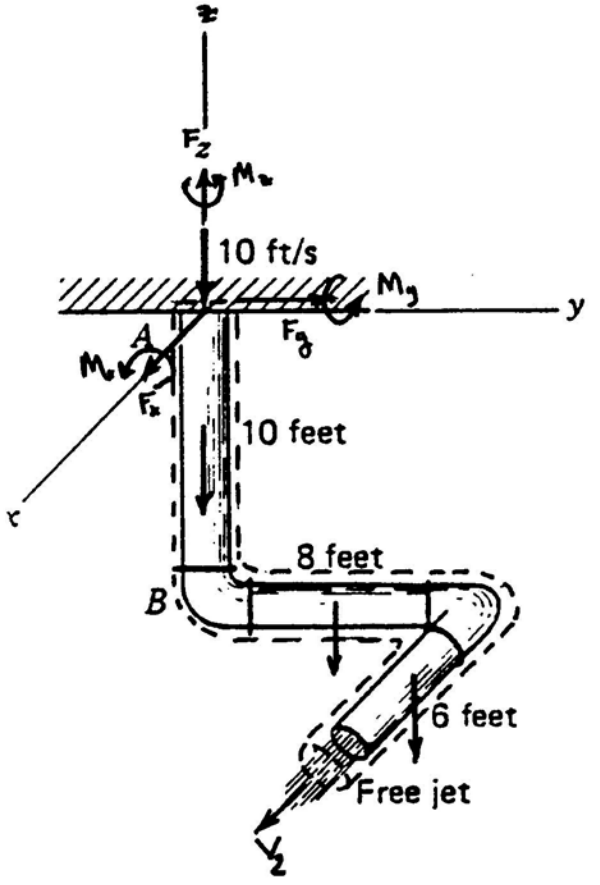


$$(M_x\hat{i}+M_y\hat{j}+M_z\hat{k}) + (-5\hat{k}) \times [(62.4)(10)\left(\frac{\pi\left(\frac{1}{2}\right)^2}{4}\right) + 100](-\hat{k})$$

$$+ (-10\hat{k}+4\hat{j}) \times [(62.4)(8)\left(\frac{\pi\frac{1}{4}}{4}\right) + 80](-\hat{k})$$

$$+ (-10\hat{k}+8\hat{j}+3\hat{i}) \times [(62.4)(6)\left(\pi\frac{\frac{1}{4}}{4}\right) + 60](-\hat{k})$$

$$= (-10\hat{k}+8\hat{j}+6\hat{i}) \times (10\hat{i})[(10)\left(\frac{\pi\left(\frac{1}{4}\right)}{4}\right)(1.94)]$$

http://ingesolucionarios.blogspot.com

(cont.)

$$\therefore \; M_x\hat{i} + M_y\hat{j} + M_z\hat{k} - 712\hat{i} - 1{,}068\hat{i} + 401\hat{j} = -304\hat{k} - 381\hat{j}$$

The scalar equations are:

$$\begin{cases} M_x = 1780 \; ft\text{-}lb \\ M_y = -782 \; ft\text{-}lb \\ M_z = -304 \; ft\text{-}lb \end{cases}$$

The reaction is:

$$\begin{cases} (M_x)_k = -1780 \; ft\text{-}lb \\ (M_y)_k = 782 \; ft\text{-}lb \\ (M_z)_k = 304 \; ft\text{-}lb \end{cases}$$

These are the torques transmitted to pipe at $A$ .

4.68 **Moment of momentum** equation about point $A$ . Use gauge pressures.

<u>For water</u>:

Do Prob. 4.67 by using first a control volume covering the interior volume of the pipe and then, to take care of the weight of the pipe, a free-body diagram of the pipe.

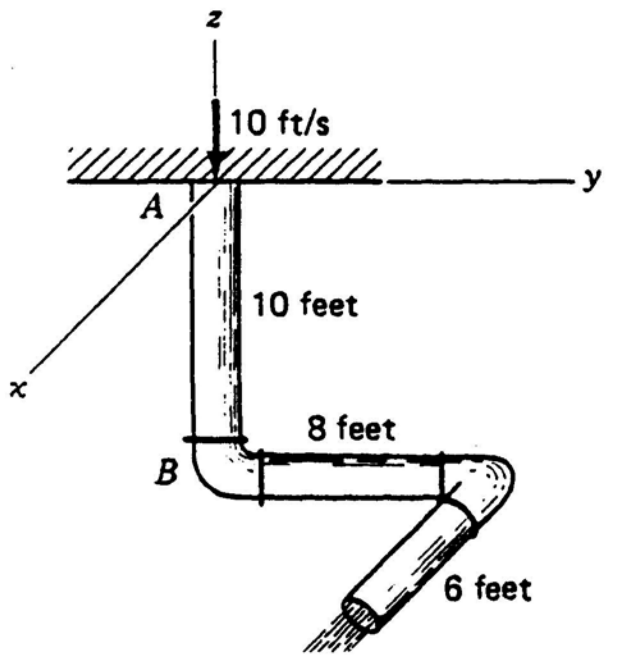


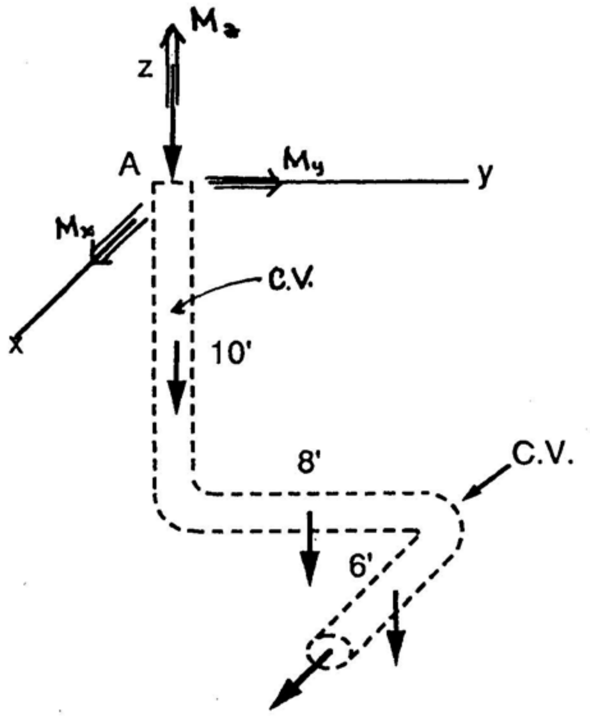

http://ingesolucionarios.blogspot.com

$$(M_x\hat{i}+M_y\hat{j}+M_z\hat{k}) + (-5\hat{k}) \times \left[(62.4)(10)\left(\frac{\pi\left(\frac{1}{4}\right)}{4}\right)\right](-\hat{k})$$

$$+ (-10\hat{k}+4\hat{j}) \times \left[(62.4)(8)\left(\frac{\pi}{16}\right)\right](-\hat{k})$$

$$+ (-10\hat{k}+8\hat{j}+3\hat{i}) \times \left[(62.4)(6)\left(\frac{\pi}{16}\right)\right](-\hat{k})$$

$$= (-10\hat{k}+8\hat{j}+6\hat{i}) \times (10\hat{i})\left[(10)\left(\frac{\pi}{16}\right)(1.94)\right]$$

$$\therefore\ (M_x\hat{i}+M_y\hat{j}+M_z\hat{k}) - 392\hat{i} - 588\hat{i} + 221\hat{j} = -381\hat{j} - 304\hat{k}$$

$$\begin{cases} M_x = 980\ ft\text{-}lb \\ M_y = -602\ ft\text{-}lb \\ M_z = -304\ ft\text{-}lb \end{cases} \qquad \underline{\text{on water}}$$

Reaction:

$$\begin{cases} (M_x)_k = -980\ ft\text{-}lb \\ (M_y)_k = 602\ ft\text{-}lb \\ (M_z)_k = 304\ ft\text{-}lb \end{cases} \qquad \underline{\text{on pipe}}$$

For wt. of pipe itself:

$$\vec{M}_{pipe} = (-10\hat{k}+4\hat{j})\times(-80\hat{k})+(-10\hat{k}+8\hat{j}+3\hat{i})\times(-60\hat{k})$$

$$= -320\hat{i} - 480\hat{i} + 180\hat{j}\ ft\text{-}lb$$

$$\vec{M}_{total} = (-980-320-480)\hat{i} + (602+180)\hat{j} + (304)\hat{k}$$

$$\boxed{\vec{M}_{total} = -1780\hat{i} + 782\hat{j} + 304\hat{k}\ ft\text{-}lb}$$


http://ingesolucionarios.blogspot.com Edu_Zegarr_ch

http://ingesolucionarios.blogspot.com

Compute the bending moment from the water at point $E$ of the pipe system containing water using the method of moment of momentum. The flow is steady.

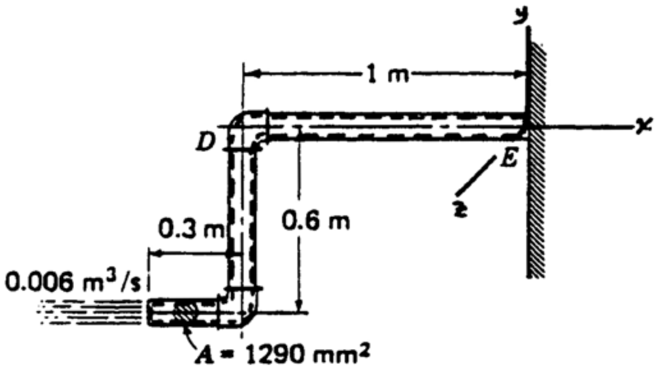


Assumptions:

1. Steady flow.
2. Incompressioble flow, $g$ is constant.
3. 1-D flow out of control volume.

a) The **moment of momentum** equation for steady flow is:

$$\vec{M}_s + \vec{M}_B = \oiint_{c.s.} \vec{r} \times \vec{V}(\rho \vec{V} \cdot d\vec{A})$$

Taking moments about point $E$, we have using gauge pressures:

$$\vec{T}_{water} + \left(\frac{1}{2}\right)(-\hat{i}) \times (1)(1{,}290\times10^{-6})(9{,}806)(-\hat{j})$$

$$+ (-1\hat{i} - .3\hat{j}) \times (.6)(1{,}290\times10^{-6})(9{,}806)(-\hat{j})$$

$$+ (-1.15\hat{i} - .6\hat{j}) \times (.3)(1{,}290\times10^{-6})(9{,}806)(-\hat{j})$$

$$= (-1.3\hat{i} - .6\hat{j}) \times \left(-\frac{.006}{1{,}290\times10^{-6}}\right)\hat{i}(1{,}000)(.006)$$

$$T_{water} = -35.01\hat{k}\ N\text{-}m$$

The reaction to the torque is the desired torque on the pipe about point $E$.

$$\vec{T}_{pipe} = 35.01\hat{k}\ N\text{-}m$$

 http://ingesolucionarios.blogspot.com

For a steady flow of water, compute the bending moment from the water at section $A$ of the pipe by the method of moment of momentum.

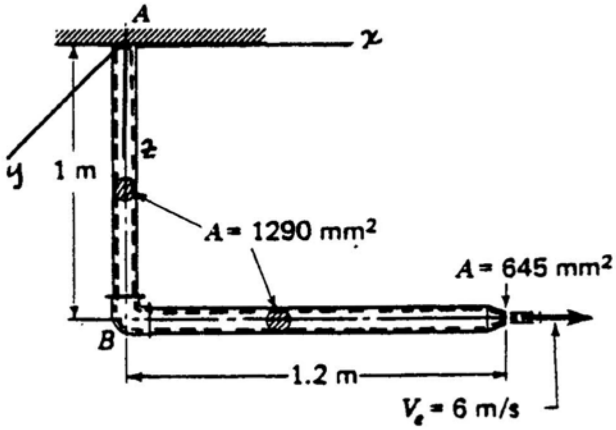


For steady, 1-D flow we have for the **moment of momentum** equation:

$$\vec{M}_S + \vec{M}_B = \oiint_{c.s.} (\vec{r} \times \vec{V}) \rho \vec{V} \cdot d\vec{A}$$

Using gauge pressure we have for point $A$ :

$$\vec{T}_A + (1\hat{k} + .6\hat{i}) \times [(1.2)(1{,}290 \times 10^{-6})(9{,}806)\hat{k}]$$

$$= (1\hat{k} + 1.2\hat{i}) \times (6\hat{i})[(6)(645 \times 10^{-6})(1{,}000)]$$

$$\vec{T}_A - 9.11\hat{j} = 23.2\hat{j}$$

$$\vec{T}_A = 32.3\hat{j}\ N\text{-}m$$

$\therefore$ Moment on pipe from water $= -32.2j\ N\text{-}m$

4.71

Water is flowing steadily through the 200-mm pipe

(*a*) Find the moment components on the base of the pipe at *A* from water, air, and pipe weight.

(*b*) Find the Force components at the base of the pipe at *A* from water, air, and pipe weight.

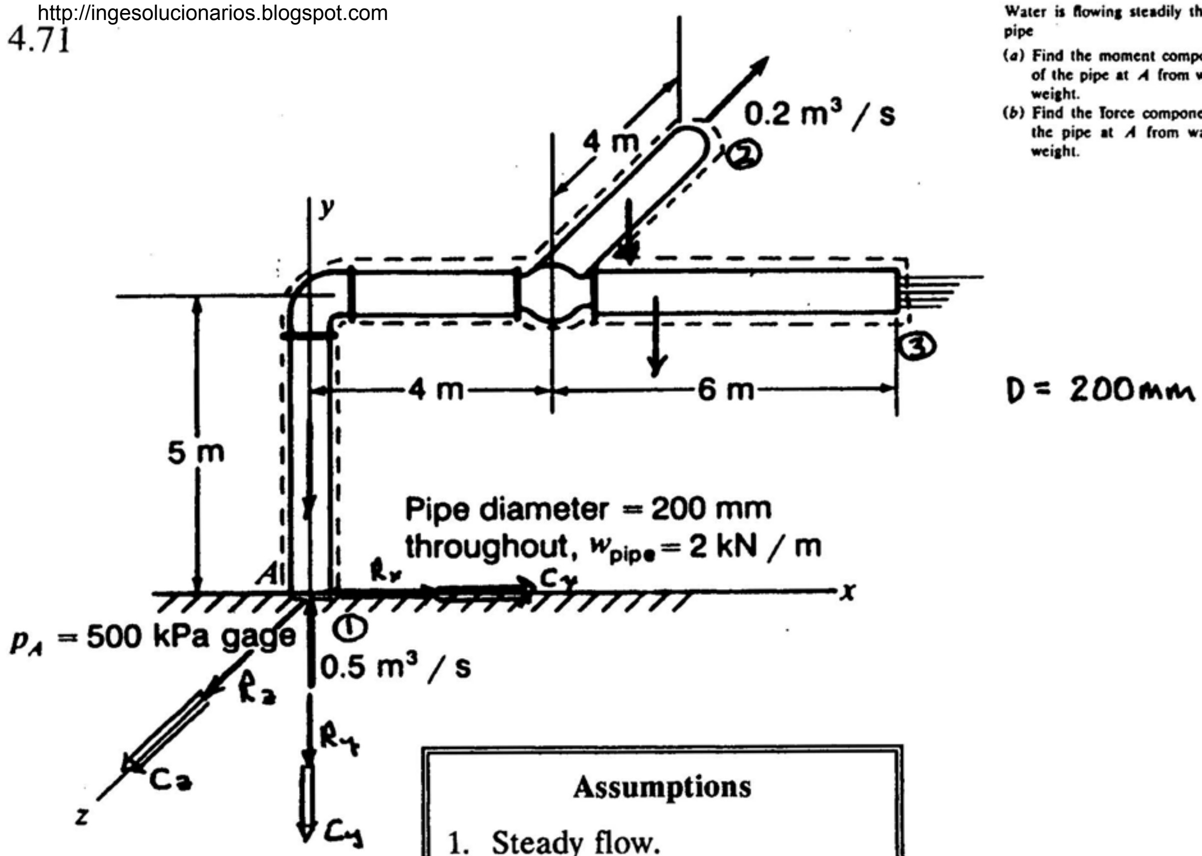


**Assumptions**

1. Steady flow.
2. 1-D flows.
3. Incompressible flow.

$$V_2 = \frac{.2}{\frac{(\pi)(.04)}{4}} = 6.366\ m/s$$

$$V_3 = \frac{.3}{\frac{(\pi)(.04)}{4}} = 9.549\ m/s$$

$$V_1 = \frac{.5}{\frac{(\pi)(.04)}{4}} = 15.92\ m/s$$

a) **Moment of Momentum Eq.** about Pt. A.

$$\oiint_{c.s.} \vec{r}\times\vec{T}\,dA + \iiint_{c.v.} \vec{r}\times\vec{B}\,\rho\,dv = \oiint_{c.s.} (\vec{r}\times\vec{V})(\rho\,\vec{V}\cdot d\vec{A}) + \frac{\partial}{\partial t}\iiint_{c.v.} \vec{r}\times\vec{V}\rho\,dv$$

http://ingesolucionarios.blogspot.com
(cont.)

$$C_x\hat{i} + C_y\hat{j} + C_z\hat{k} + (5\hat{j} + 5\hat{i})\times\left[(9{,}806)\left(\frac{\pi}{4}\right)(.2)^2(10) + (2{,}000)(10)\right](-\hat{j})$$

$$+ (5\hat{j} + 4\hat{i} - 2\hat{k})\times\left[(9{,}806)\left(\frac{\pi}{4}\right)(.2^2)(4) + (2{,}000)(4)\right](-\hat{j})$$

$$= (5\hat{j} + 4\hat{i} - 4\hat{k})\times(-6.366\hat{k})(.2)(1{,}000) + (5\hat{j} + 10\hat{i})\times(9.549\hat{i})(.3)(1{,}000)$$

$$\therefore\quad C_x\hat{i} + C_y\hat{j} + C_z\hat{k} + (5\hat{j} + 5\hat{i}) \times (-2.308\times10^4\hat{j}) + (5\hat{j} + 4\hat{i} - 2\hat{k}) \times (-9.232\times10^3\hat{j})$$

$$= (5\hat{j} + 4\hat{i})\times(-1.273\times10^3\hat{k}) + (5\hat{j}) \times (2.865\times10^3\hat{i})$$

$$C_x\hat{i} + C_y\hat{j} + C_z\hat{k} - 1.154\times10^5\hat{k} - 3.693\times10^4\hat{k} - 1.846\times10^4\hat{i}$$

$$= -6.366\times10^3\hat{i} + 5.093\times10^3\hat{j} - 1.433\times10^4\hat{k}$$

$$C_x = 1.846\times10^4 - 6.366\times10^3 = 1.209\times10^4\ N\text{-}m$$

$$C_y = 5.093\times10^3\ N\text{-}m$$

$$C_3 = 1.154\times10^5 + 3.693\times10^4 - 1.433\times10^4 = 1.380\times10^5\ N\text{-}m$$

$$ANS\begin{cases} M_x = -1.209\times10^4\ N\text{-}m \\ M_y = -5.093\times10^3\ N\text{-}m \\ M_z = 1.380\times10^5\ N\text{-}m \end{cases}$$

b) **Linear Momentum**

$$\oiint_{c.s.} \vec{T}\,dA + \oiint_{c.s.} \vec{B}\,\rho\,dv = \oiint_{c.s.} \vec{V}\rho\vec{V}\cdot d\vec{A} + \frac{\partial}{\partial t}\iiint_{c.v.} \vec{V}\rho\,dv$$

$$R_x\hat{i} + R_y\hat{j} + R_z\hat{k} + (500{,}000)\left(\frac{\pi}{4}\right)(.04)\hat{j} + \left[(9{,}806)\left(\frac{\pi}{4}\right)(.04)(19) + (19)(2{,}000)\right](-\hat{j})$$

$$= -(15.92\hat{j})(.5)(1{,}000) + (-6.366\hat{k})(.2)(1{,}000) + (9.549\hat{i})(.3)(1{,}000)$$



http://ingesolucionarios.blogspot.com Edu_Zegarr_ch

http://ingesolucionarios.blogspot.com

(cont.)

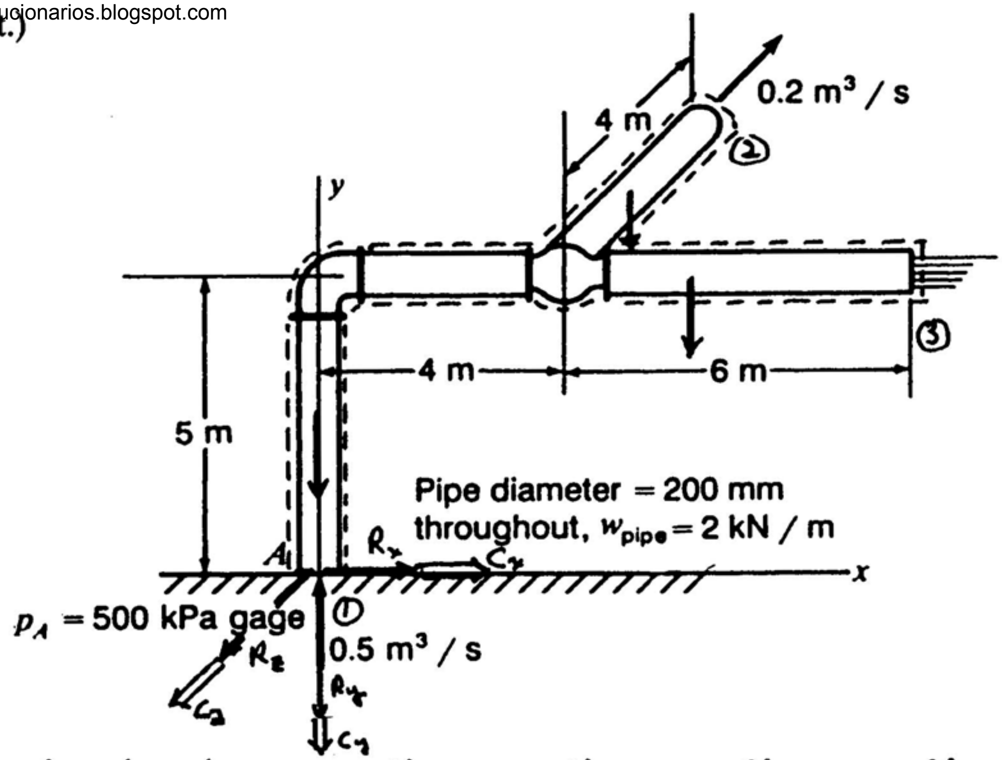


$$R_x\hat{i} + R_y\hat{j} + R_z\hat{k} = -1.571\times10^4\hat{j} + 4.385\times10^4\hat{j} - 7.960\times10^3\hat{j} - 1.273\times10^3\hat{k} + 2.865\times10^3\hat{i}$$

$$R_x = 2.865\times10^3\ N$$

$$R_y = 2.018\times10^4\ N$$

$$R_z = -1.273\times10^3\ N$$

$$\therefore \begin{cases} K_x = -2.865\times10^3\ N \\ K_y = -2.018\times10^4\ N \\ K_z = 1.273\times10^3\ N \end{cases}$$

http://ingesolucionarios.blogspot.com 

http://ingesolucionarios.blogspot.com

4.72

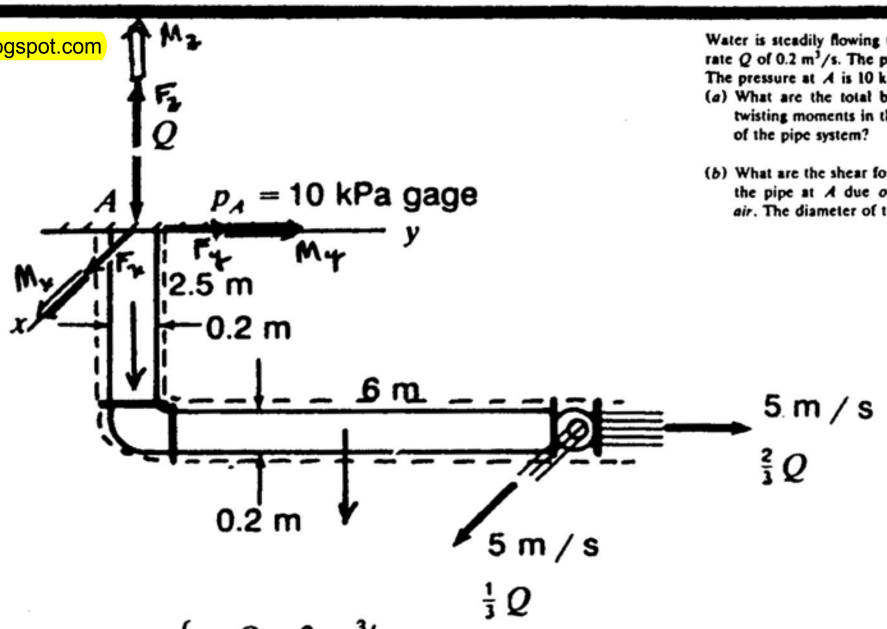


Water is steadily flowing through a pipe at the rate $Q$ of 0.2 $m^3/s$. The pipe weighs 0.3 kN/m. The pressure at $A$ is 10 kPa gage.

(*a*) What are the total bending moments and twisting moments in the pipe at the base $A$ of the pipe system?

(*b*) What are the shear forces and axial force in the pipe at $A$ due *only* to the *water* and *air*. The diameter of the pipe is 0.2 m.

$$\begin{cases} Q = .2 \ m^3/s \\ w_{pipe} = .3 \ kN/m \end{cases}$$

**Assumptions**

1. Steady flow.
2. 1-D flow in and out.
3. Incompressible flow.

$$V = \frac{.2}{\frac{(\pi)(.200)^2}{4}} = 6.366 \ m/s$$

**Moment of Momentum** about A

$$\oiint_{c.s.} \vec{r}\times\vec{T}\,dA + \iiint_{c.v.} \vec{r}\times\vec{B}\,\rho\,dv = \oiint_{c.s.} (\vec{r}\times\vec{V})\rho\vec{V}\cdot d\vec{A} + \frac{\partial}{\partial t}\iiint_{c.v.} \vec{r}\times\vec{V}\,\rho\,dv$$

$$C_x\hat{i} + C_y\hat{j} + C_z\hat{k} + (-2.5\hat{k} + 3\hat{j})\times\left[9{,}806\,\frac{\pi(.2)^2}{4}(6) + (300)(6)\right](-\hat{k})$$

$$= (-2.5\hat{k} + 6\hat{j})\times(5\hat{i})\left[\frac{1}{3}(.2)(1{,}000)\right] + (-2.5\hat{k} + 6\hat{j})\times(5\hat{j})\left[\frac{2}{3}(.2)(1{,}000)\right]$$



http://ingesolucionarios.blogspot.com Edu_Zegarr_ch

http://ingesolucionarios.blogspot.com

(cont.) $$C_x\hat{i} + C_y\hat{j} + C_z\hat{k} - 10{,}945\hat{i} = 1{,}666.7\hat{i} - 833.3\hat{j} - 2{,}000\hat{k}$$

$$\begin{cases} C_x = 12{,}612\ N\text{-}m \\ C_y = -833.3\ N\text{-}m \\ C_z = -2{,}000\ N\text{-}m \end{cases}$$

b)

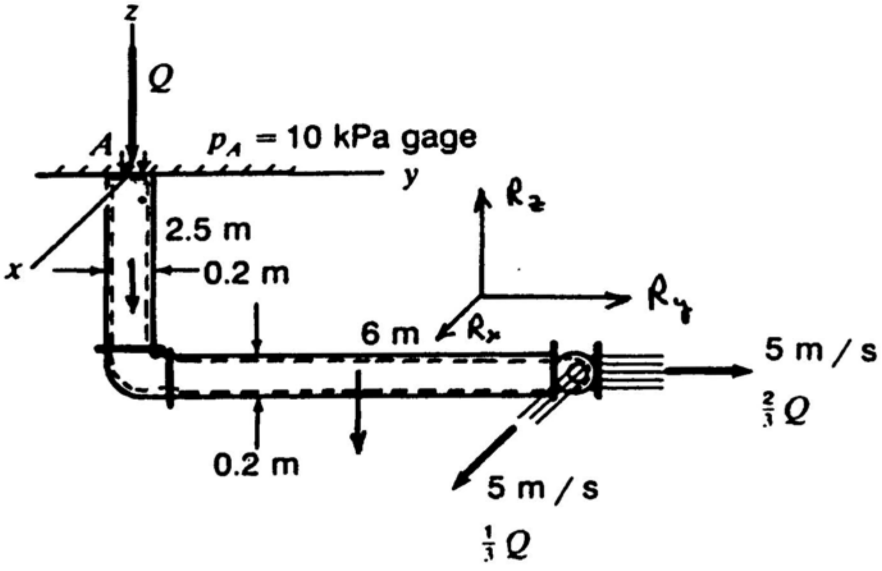


| Assumptions |
|---|
| 1. Steady flow. |
| 2. 1-D flow. |
| 3. Incompressible flow. |

**Linear Momentum Eq.**

$$\oiint_{c.s.} \vec{T}\,dA + \iiint_{c.v.} \vec{B}\,\rho\,dv = \oiint_{c.s.} \vec{V}(\rho\vec{V}\cdot d\vec{A}) + \frac{\partial}{\partial t}\iiint_{c.v.} \vec{V}\rho\,dv$$

$$(10{,}000 + p_{atm})\left(\frac{\pi}{4}\right)(.2)^2(-\hat{k}) + R_x\hat{i} + R_y\hat{j} + R_z\hat{k} + (9{,}806)(\pi)\left(\frac{.2^2}{4}\right)(8.5)(-\hat{k})$$

$$+ p_{atm}(A_2)(-\hat{j}) + (p_{atm})(A_3)(-\hat{i}) = -(6.366\hat{k})[(-.2)(1{,}000)]$$

$$+ (5\hat{j})\left[\left(\frac{2}{3}\right)(.2)(1{,}000)\right] + (5\hat{i})\left[\left(\frac{1}{3}\right)(.2)(1{,}000)\right]$$



http://ingesolucionarios.blogspot.com Edu_Zegarr_ch

http://ingesolucionarios.blogspot.com
(cont.)

$$R_x = [333.3 + p_{atm}(A_3)]$$

$$R_y = [666.6 + p_{atm}(A_2)]$$

$$R_z = [4{,}206 + p_{atm}\frac{\pi}{4}(.2)^2]$$

$$\therefore \begin{cases} K_x = -333.3 - p_{atm}A_3 \quad N \\ K_y = -666.6 - p_{atm}A_2 \quad N \\ K_z = -4{,}206 - p_{atm}\frac{\pi}{4}(.2)^2 \quad N \end{cases}$$

Look at **outside of pipe.**

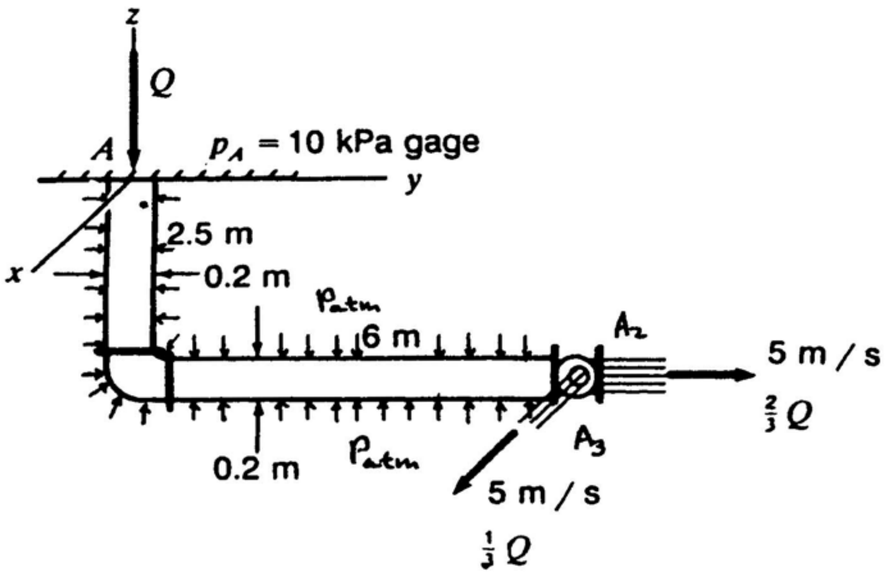


$$(\vec{K})_{AIR} = (p_{atm})\left(\frac{\pi}{4}\right)(.2)^2(\hat{k}) + p_{atm}A_3\hat{\imath} + p_{atm}A_2\hat{\jmath}$$

$$\boxed{\vec{K}_{TOTAL} = -333.3\hat{\imath} - 666.6\hat{\jmath} - 4{,}206\hat{k} \quad N}$$


http://ingesolucionarios.blogspot.com Edu_Zegarr_ch

http://ingesolucionarios.blogspot.com

4.73

A platform is shown which can rotate about axis *MM*. A jet of water is directed out from the center of the platform while it is stationary and strikes a vane at the periphery of the platform. The vane turns the jet 90° as shown. What is the torque developed about *MM*?

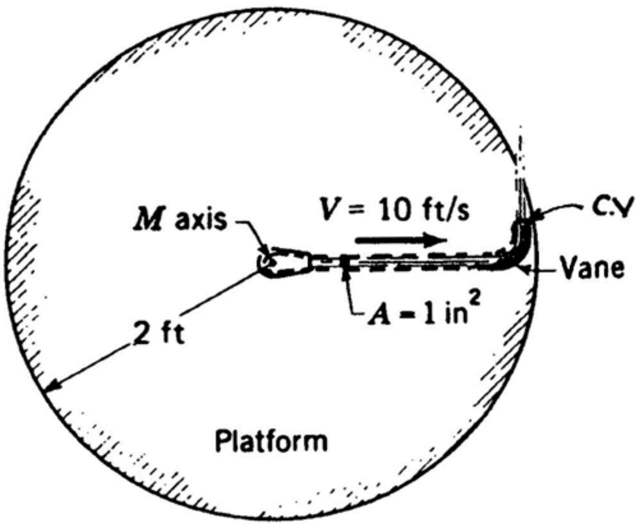


| **Assumptions** |
|---|
| 1. Steady flow. |
| 2. No change in speed of jet from friction. |
| 3. 1-D flow at exit of C.V. |

The scalar equation of **moment of momentum** about the *MM* axis is:

$$T_S + T_B = \oiint_{c.s.} \bar{r} V_\theta (\rho \vec{V} \cdot d\vec{A})$$

$$T_S = (2)(10)(1.938)(10)\left(\frac{1}{144}\right)$$

$$T_S = 2.69 \ lb\text{-}ft$$

Taking the reaction gives the torque on the system.

$$T = -2.69 \ lb\text{-}ft$$

http://ingesolucionarios.blogspot.com Edu_Zegarr_ch 

http://ingesolucionarios.blogspot.com

A jet of water 645 mm² in cross section is directed out at a speed of 3 m/s at a 90° vane positioned 0.6 m from the center of the platform from which the jet issues as shown. It then strikes a 90° vane to attain a direction of motion parallel to its original direction. If the platform is stationary, what is the torque about MM as a result of this action?

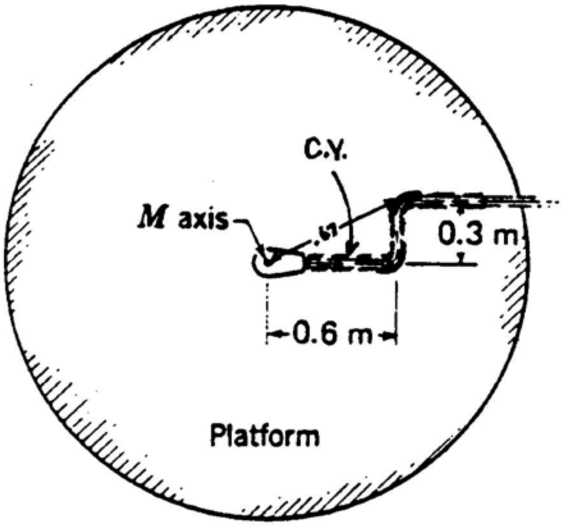


**Assumptions**

1. Steady flow.
2. No change of speed of jet from friction.
3. 1-D flow at exit of C.V.

The scalar equation for **moment of momentum** about *MM* axis is:

$$T_S + T_B = \oiint_{C.S.} \bar{r}\, V_\theta (\rho \vec{V} \cdot d\vec{A})$$

$$T_S = (.67)[(3)\sin\alpha](3)(645\times10^{-6})(1{,}000)$$

$$\sin\alpha = \frac{.3}{.67} = .4478$$

$$\therefore \quad T_S = 1.7415 \; N\text{-}m$$

Taking the reaction we get:

$$T = -1.7415 \; N\text{-}m$$

http://ingesolucionarios.blogspot.com Edu_Zegarr_ch

http://ingesolucionarios.blogspot.com

4.75 **For the control volume we use the angular momentum equation about the $z$ axis. For no friction the torques $T_S$ and $T_B$ are zero about the $z$ axis. We get**

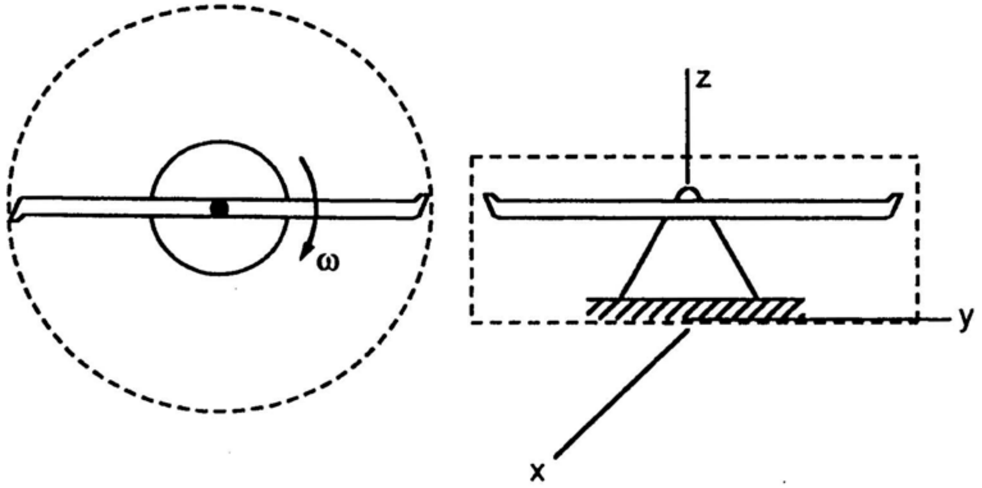


In Example the following data apply: $q = 5$ L/s, $\alpha = 20°$, $l = 300$ mm, $A_e = 600$ mm². Find the angular speed $\omega$ of the arm for zero frictional torque.

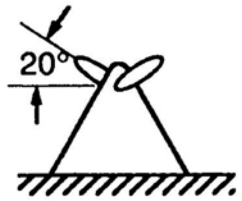


$$0 = \iint_{c.s.} (\bar{r}V_\theta)(\rho \vec{V} \cdot d\vec{A}) + 0 \qquad \text{(a)}$$

The last expression is zero since $V_\theta$ is constant inside the control volume. The velocity of the jet relative to the rotor is found using the inside of the rotor as the control volume. Thus:

$$q = (2)(V_e)(A_e)$$

$$(5)(.001) = (2)(V_e)(.0006)$$

$$V_e = 4.17 \ m/\text{sec}$$

The velocity of the fluid $V_\theta$ on leaving the rotor is as seen from the ground reference $XYZ$ :

$$(V_\theta)_{XYZ} = [(4.17)(\cos 20°) - (\omega)(.150)] = 3.92 - .15\omega \qquad \text{(b)}$$

Now go back to Eq. (a) and substitute.

$$0 = (.150)[3.92 - .15\omega][(5)(.001)(1{,}000)]$$

$$\omega = 26.13 \ rad/\text{sec}$$

$$\therefore \quad \boxed{\omega = 26.13 \ rad/\text{sec}}$$


http://ingesolucionarios.blogspot.com Edu_Zegarr_ch

 http://ingesolucionarios.blogspot.com

In Prob. [illegible] find ω for steady rotation if there is a resisting torque $T_f$ due to bearing friction and windage given as $0.08\omega^2$ newton-meters, with ω in radians per second.

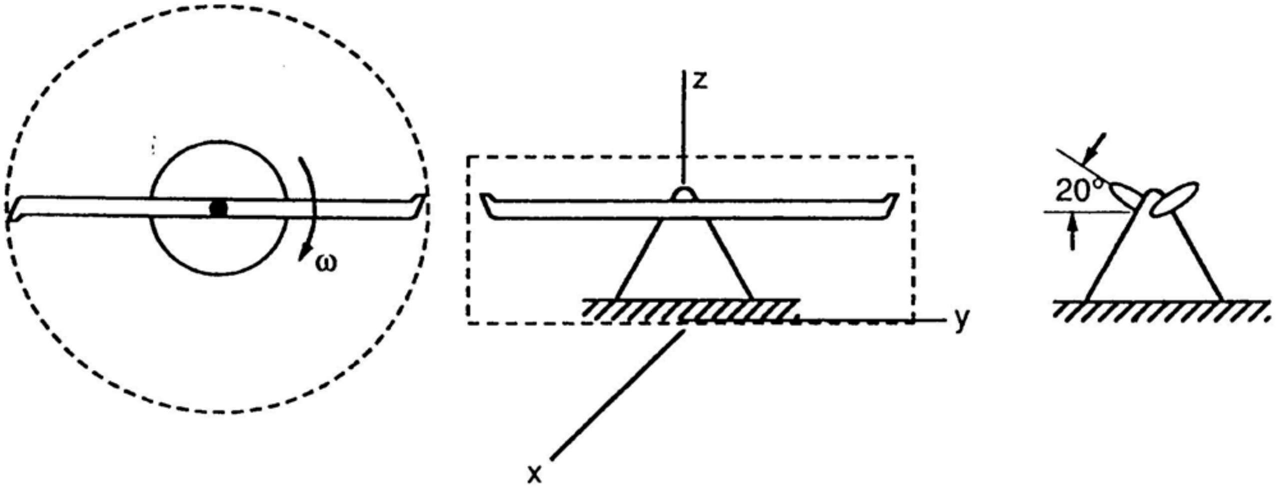


Using same C.V. as in the previous solution, we now have for the **angular momentum** equation about the $z$ axis:

$$T_z = \oint\!\!\oint_{c.s.} (\bar{r}V_\theta)(\rho \vec{V}\cdot d\vec{A}) + 0 \qquad \text{(a)}$$

From **continuity** in the rotor we get $\qquad V_e = 4.17\ m/s$

relative to the rotor as in the previous solution. Also, we can say from kinematics:

$$(V_\theta)_{XYZ} = 3.92 - .15\omega \qquad \text{(b)}$$

Accordingly, we get: $\qquad .08\omega^2 = (.15)(3.92 - .15\omega)(5)(.001)(1{,}000)$

$$\omega^2 = -1.406\omega + 36.75$$

$$\omega^2 + 1.406\omega - 36.75 = 0$$

Solve using quadratic formula:

$$\omega = \frac{-1.406 \pm \sqrt{1.406^2 + (4)(36.75)}}{2}$$

$$\boxed{\omega = 5.40\ rad/\text{sec}}$$


http://ingesolucionarios.blogspot.com Edu_Zegarr_ch

 http://ingesolucionarios.blogspot.com

Consider Prob. 4.4 What is the steady-state rotational speed if there is a constant resisting torque of 30 N · m?

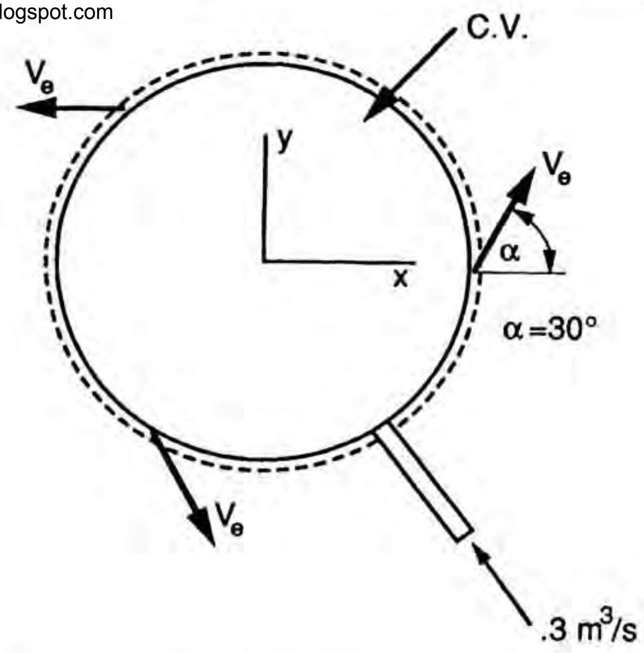


Relative to the **rotor** $V_e$ is easily determined from the **continuity** equation for the indicated control volume:

$$\oiint \vec{V}\cdot d\vec{A} = 0 \qquad -(.3) + 3[(V_e)(.05)] = 0$$

$$V_e = 2.00\ m/\text{sec}$$

The velocity $(V_\theta)_{XYZ}$ is now easily determined.

$$(V_\theta)_{XYZ} = 2\cos 60° - (.600)(\omega) = 1.00 - .6\omega$$

Now go to the **angular momentum** equation about the $Z$ axis.

$$T_S = \oiint (\bar{r}V_\theta)(\rho \vec{V}\cdot d\vec{A})$$

Assuming 1-D flow at exits we get:

$$30 = (.600)(1.00-.6\omega)[(.3)(1{,}000)]$$

$$\boxed{\omega = 1.389\ rad/\text{sec}}$$


http://ingesolucionarios.blogspot.com Edu_Zegarr_ch

4.78

http://ingesolucionarios.blogspot.com

If the flow of water divides up equally at the tee at $D$, what is the total force system (force and torque) transmitted through section $C$ owing to the water and air? $A_e = 1290\ mm^2$ and $p_C = 70$ kPa gage.

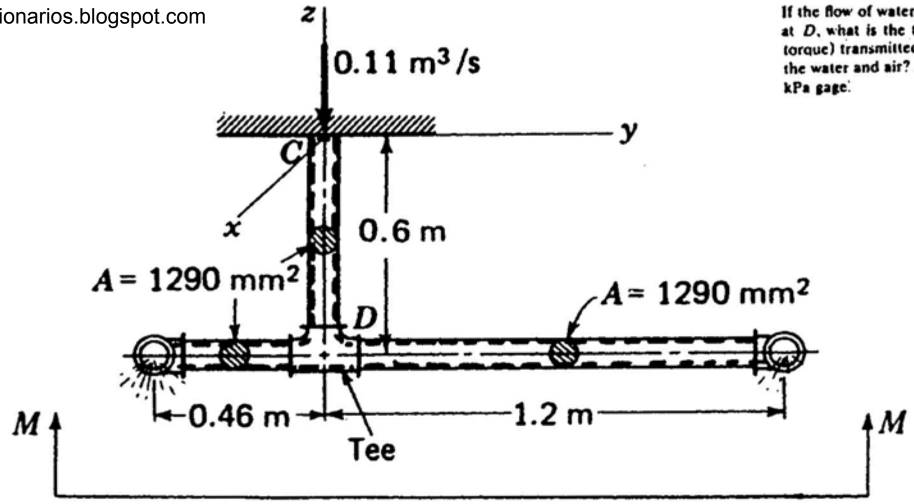


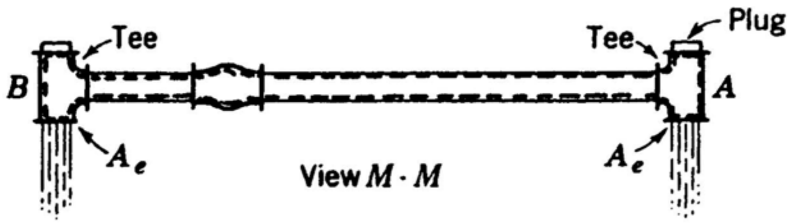


a) First we get the couple acting at $C$ by using the **moment of momentum** equation:

| **Assumptions** |
|---|
| 1. Steady flow. |
| 2. 1-D flow at exits. |

$$\vec{M}_S + \vec{M}_B = \oiint_{c.s.} (\vec{r}\times\vec{V})(\rho\vec{V}\cdot d\vec{A})$$

Using gauge pressures. We get

$$\vec{T} + (-.6\hat{k}+.6\hat{j}) \times (1.2)(1{,}290\times10^{-6})(9{,}806)(-\hat{k})$$

$$+ (-.6\hat{k}-.23\hat{j}) \times (.46)(1{,}290\times10^{-6})(9{,}806)(-\hat{k})$$

$$= (-.6\hat{k}+1.2\hat{j}) \times \left(\frac{\frac{.11}{2}}{1{,}290\times10^{-6}}\right)(1{,}000)\left(\frac{.11}{2}\right)(\hat{i})$$

$$+ (-.6\hat{k}-.46\hat{j}) \times \left(\frac{\frac{.11}{2}}{1{,}290\times10^{-6}}\right)(1{,}000)\left(\frac{.11}{2}\right)(\hat{i})$$



http://ingesolucionarios.blogspot.com Edu_Zegarr_ch

http://ingesolucionarios.blogspot.com

**(cont.)**

$$\therefore \quad \vec{T} - 9.11\hat{i} + 1.338\hat{i} = -1{,}407\hat{j} - 2{,}814\hat{k} - 1{,}407\hat{j} + 1{,}079\hat{k}$$

$$\vec{T} = 7.77\hat{i} - 2{,}814\hat{j} - 1{,}735\hat{k} \ N\text{-}m$$

The reaction to this torque is the desired torque.

$$\vec{T}_C = -7.77\hat{i} + 2{,}814\hat{j} + 1{,}735\hat{k} \ N\text{-}m$$

b) Now use **linear momentum** for C.V.

$$-(70{,}000)(1{,}290\times10^{-6})\hat{k} - (9{,}806)(1{,}290\times10^{-6})(.6+.46+1.2)\hat{k} + \vec{F}_S$$

$$= \left(\frac{\frac{.11}{2}}{1{,}290\times10^{-6}}\right)\left(\frac{.11}{2}\right)(1{,}000)\hat{i} + \left(\frac{\frac{.11}{2}}{1{,}290\times10^{-6}}\right)\left(\frac{.11}{2}\right)(1{,}000)(\hat{i})$$

$$+ \left(\frac{\frac{.11}{2}}{1{,}290\times10^{-6}}\right)(.11)(1{,}000)\hat{k} - 90.3\hat{k} - 28.6\hat{k} + \vec{F}_s = 4{,}690\hat{i} + 9{,}380\hat{k}$$

$$\vec{F}_S = 4{,}690\hat{i} + 9{,}499\hat{k} \ N$$

Taking the reaction

$$\vec{K} = -4{,}690\hat{i} - 9{,}499\hat{k} \ N$$

The total force system transmitted

$$\vec{K} = -4{,}690\hat{i} - 9{,}499\hat{k} \ N$$

$$\vec{T} = -7.77\hat{i} + 2{,}814\hat{j} + 1{,}735\hat{k} \ N\text{-}m$$



http://ingesolucionarios.blogspot.com Edu_Zegarr_ch

http://ingesolucionarios.blogspot.com

4.79

If in Prob. 4.78 the flow is reversed at the tee at *B* by putting the plug on the other side, what is the total force system (force and torque) transmitted through section *C* owing to the water?

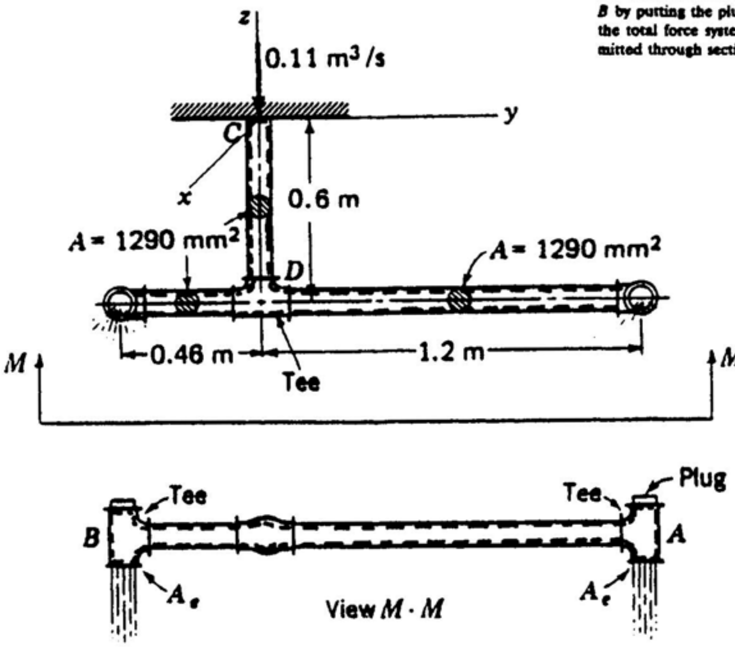


Using the same control volume we have for the **moment of momentum** equation:

a) Torque

$$\vec{T} + (-.6\hat{k}+.6\hat{j}) \times (1.2)(1{,}290\times10^{-6})(9{,}806)(-\hat{k})$$

$$+ (.6\hat{k}-.23\hat{j}) \times (.46)(1{,}290\times10^{-6})(9{,}806)(-\hat{k})$$

$$= (-.6\hat{k}+1.2\hat{j}) \times \left(\frac{\frac{.11}{2}}{1{,}290\times10^{-6}}\right)(1{,}000)\left(\frac{.11}{2}\right)\hat{i}$$

$$+ (-.6\hat{k}-.46\hat{j}) \times \left(\frac{\frac{-.11}{2}}{1{,}290\times10^{-6}}\right)(1{,}000)\left(\frac{.11}{2}\right)\hat{i}$$

$$\vec{T} - 9.11\hat{i} + 1.338\hat{i} = -1{,}407\hat{j} - 2{,}814\hat{k} + 1{,}407\hat{j} - 1{,}079\hat{k}$$

$$\vec{T} = 7.77\hat{i} - 3{,}893\hat{k}\ N\text{-}m$$

For the torque desired take the reaction

$$\vec{T}_C = -7.77\hat{i} + 3{,}893\hat{k}\ N\text{-}m$$

b) Force. We use the **linear momentum** equation for the same control volume.



http://ingesolucionarios.blogspot.com Edu_Zegarr_ch

http://ingesolucionarios.blogspot.com
(cont.)

$$-(70{,}000)(1{,}290\times10^{-6})\hat{k} + (1{,}290\times10^{-6})(.6+.46+1.2)(9{,}806)(-\hat{k}) + \vec{F}_s$$

$$= \left(\frac{\frac{.11}{2}}{1{,}290\times10^{-6}}\right)\left(\frac{.11}{2}\right)(1{,}000)\hat{i} - \left(\frac{\frac{.11}{2}}{1{,}290\times10^{-6}}\right)\left(\frac{.11}{2}\right)(1{,}000)\hat{i}$$

$$+ \left(\frac{\frac{.11}{2}}{1{,}290\times10^{-6}}\right)(.11)(1{,}000)\hat{k}$$

$$-90.3\hat{k} - 28.6\hat{k} + \vec{F}_S = 9{,}380k$$

$$\vec{F}_S = 9{,}499\hat{k}\ N$$

The reaction is: $\vec{K}_S = -9{,}499\hat{k}\ N$

The force system transmitted through at $C$ is:

$$\vec{K}_S = -9{,}499\hat{k}\ N$$

$$\vec{C}_S = -7.77\hat{i} + 3{,}893\hat{k}\ N\text{-}m$$


http://ingesolucionarios.blogspot.com Edu_Zegarr_ch

http://ingesolucionarios.blogspot.com

4.80

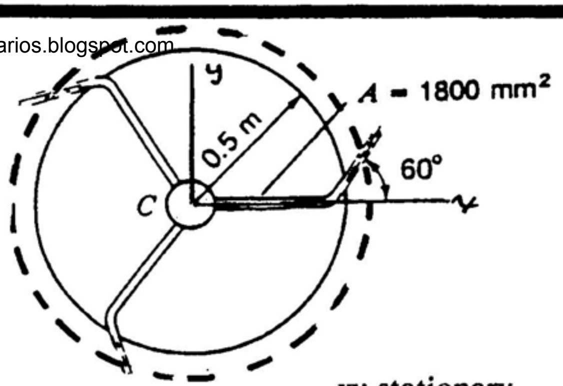


xy stationary

A rotor is held stationary while 5 L/s of water enters at $C$ and flows out through three channels, each of which has a cross-sectional area of 1800 mm$^2$. What is the angular speed $\omega$ of the rotor 2 s after its release? Let us assume that there is no frictional resistance to rotation about a vertical axis $z$ coming out of the paper to you at $C$. The moment of inertia about $z$, $I_{zz}$, for the rotor plus water is 10 kg · m$^2$ (that is, $\iiint \bar{r}^2 \rho\, dv = 10$ kg · m$^2$). Use a stationary control volume.

We now employ the $z$ component (axial component) of the **angular momentum** equation. Knowing that $(\vec{M}_S)_\theta = (\vec{M}_B)_\theta = 0$ we have:

$$0 = \oiint_{c.s.} \bar{r} V_\theta (\rho \vec{V} \cdot d\vec{A}) + \frac{\partial}{\partial t} \iiint_{c.v.} (\bar{r} V_\theta) \rho \, dv \qquad \text{(a)}$$

Inserting values, we have taking $\omega$ as positive,

$$0 = (.5)\left\{\left(\left[\frac{q}{3A}\right]\sin 60^\circ\right) + .5\omega\right\}(q\rho) + \frac{\partial}{\partial t} \iiint_{c.v.} \bar{r}(\bar{r}\omega)dm \qquad \text{(b)}$$

$$0 = (.5)\left[\frac{(5\times10^{-3})\sin 60^\circ}{(3)(1,800\times10^{-6})} + .5\omega\right](1,000)(5\times10^{-3}) + \dot{\omega}\left(\iiint r^2 dm\right) \qquad \text{(c)}$$

$$\therefore\ \dot{\omega} = -\frac{1}{I_{zz}}[2.00 + 1.250\omega] = -[.200 + .1250\omega]$$

Separate variables: $$\frac{d\omega}{.2 + .1250\omega} = -dt$$

Integrate: $$\ln(.2 + .1250\omega) = -.1250t + C$$

When $t = 0$, $\omega = 0$ $$\therefore\ C = \ln(.2) = -1.609$$

$$\therefore\ \ln(.2 + .1250\omega) = -.1250t - 1.609$$

$$\therefore\ .2 + .1250\omega = e^{-(.1250t + 1.609)}$$

$$\omega = 8e^{-(.1250t + 1.609)} - 1.600$$

When $t=2$, we have $$\omega = 8e^{-[(.1250)(2) + 1.609]} - 1.600 = -.353\ rad/\text{sec.}$$



http://ingesolucionarios.blogspot.com Edu_Zegarr_ch

http://ingesolucionarios.blogspot.com

4.81 We use the angular **momentum equation** about the vertical axis at $C$. The external torque is zero and we have for a control volume on the outside periphery of the rotor:

A rotor in Fig. with four channels is held stationary and, with exits at $B$ blocked, is filled with water through inlet at $C$. Now at $t = 0$, the outlets are opened at $B$, the rotor is released, and a flow $q$ is started at the inlet such that $q$ varies as $q = 0.05t$ m$^3$/s, with $t$ in seconds. What is the differential equation for $\omega$ of the rotor if there is no resistance to rotation about the axis of the rotor at $C$? The area of each of the channels is 1500 mm$^2$. Use a stationary control volume. The moment of inertia $I_{zz}$ of rotor and water ($\iint \bar{r}^2 \rho\, dv$) is 10 kg · m$^2$.

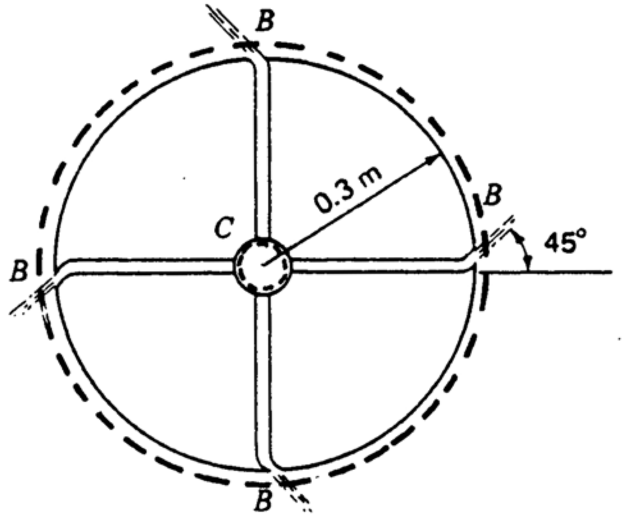


$$\oiint_{c.s.} (\bar{r}V_\theta)\rho \vec{V}\cdot d\vec{A} + \frac{\partial}{\partial t}\iiint_{c.v.} \bar{r}V_\theta(\rho\, dv) = 0$$

$$(.3)\left[\frac{q}{(4)A}(\cos 45°) + .3\omega\right]\rho q + \frac{\partial}{\partial t}\iiint_{c.v.} \bar{r}(\bar{r}\omega)dm = 0$$

We are neglecting in the last expression the $V_\theta$ of the water relative to the rotor in the small regions of curvature of the four channels at the outlets. Inserting values we get:

$$(.3)\,\frac{(.05t)^2}{(4)(1{,}500\times 10^{-6})}(.707)(1{,}000) + (.3)(.3)(\omega)(1{,}000)(.05t) + \dot{\omega}(10) = 0$$

$$88.4t^2 + 4.5\omega t + \dot{\omega}(10) = 0$$

$$\therefore \quad \boxed{\dot{\omega} + .45\omega t + 8.84t^2 = 0}$$



http://ingesolucionarios.blogspot.com Edu_Zegarr_ch

4.82 http://ingesolucionarios.blogspot.com

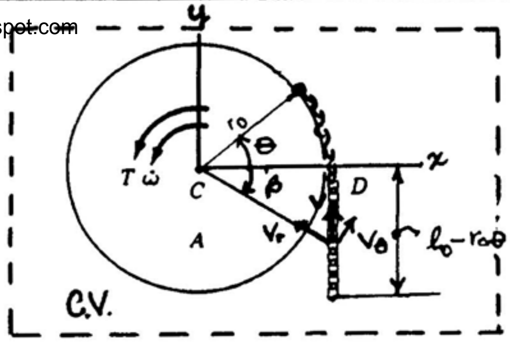


**A horizontal disc $A$ in Fig. 4.81 has a torque $T$ applied about axis $C$ that causes a constant angular acceleration $\dot{\omega} = \kappa$. A chain of length $l$ and weight per unit length $w$ lies on a frictionless horizontal surface. At time $t = 0$, $\omega = 0$, and at this instant the chain is connected to the disc at $D$. What is the torque $T$ needed? The moment of inertia about the axis $C$ of the disc is $I$. Use a stationary control volume that includes the entire chain and disc. *Hint:* For the disc, $\iiint (rV_\theta)\rho\, dv = \iiint r(r\omega)\, dm = \omega \iiint r^2\, dm = I\omega$. Is the torque $T$ that you have computed valid after $H$ touches the disc?**

Using the axial component of the **moment of momentum** equation about the axis at $C$, we have for the control volume shown

$$T_s = \oiint \bar{r} V_\theta (\rho \vec{V} \cdot d\vec{A}) + \frac{\partial}{\partial t} \iiint \bar{r} V_\theta \rho \, dv$$

$$T_s = \frac{\partial}{\partial t} \overbrace{\left[ r_o (r_o \omega) \left( \frac{w}{g} \right) (r_o \theta) + (r_o)(\omega r_o) \frac{w}{g} (\ell - r_o \theta) + I\omega \right]}^{\textit{for chain}}$$

where we note that in the second expression $\bar{r} V_\theta = r_0(\omega r)$. Also we used

$$\iiint \bar{r} V_\theta (\rho \, dv) = \iiint \bar{r} (\bar{r} \omega) \rho \, dv = \omega \iiint r^2 dm = I\omega$$

for the disc. Note that:

$$\ddot{\theta} = \dot{\omega} = \kappa$$

$$\dot{\theta} = \omega = \kappa t$$

$$\theta = \frac{\kappa t^2}{2}$$

$$T_s = \frac{\partial}{\partial t} \left[ r_0^3 (\kappa t) \left( \frac{w}{g} \right) \left( \frac{\kappa t^2}{2} \right) + r_0^2 (\kappa t) \frac{w}{g} \ell - r_0^3 (\kappa t) \frac{w}{g} \left( \frac{\kappa t^2}{2} \right) + I\omega \right]$$

$$T_s = \frac{\partial}{\partial t} \left[ \frac{r_0^3 \kappa^2 w}{2g} t^3 + \left( r_0^2 \kappa \frac{w}{g} \ell \right) t - \frac{r_0^3 \kappa^2 w}{2g} t^3 + I\omega \right] \qquad \text{(c)}$$

$$T_s = r_0^2 \kappa \frac{w}{g} \ell + I\kappa$$

This value of $T$, a constant, is valid after the end $H$ comes out the cylinder.



http://ingesolucionarios.blogspot.com Edu_Zegarr_ch

http://ingesolucionarios.blogspot.com

Do Prob. 4.32 for the case where the chain that has not come into contact with the disc rests on a horizontal surface having with the chain a dynamic coefficient of friction of $\mu_d$. Compute the torque for the time interval before $H$ comes into contact with the disc. The solution to the preceding problem is $T_s = r_0^2\kappa(w/gl) + I\kappa$.

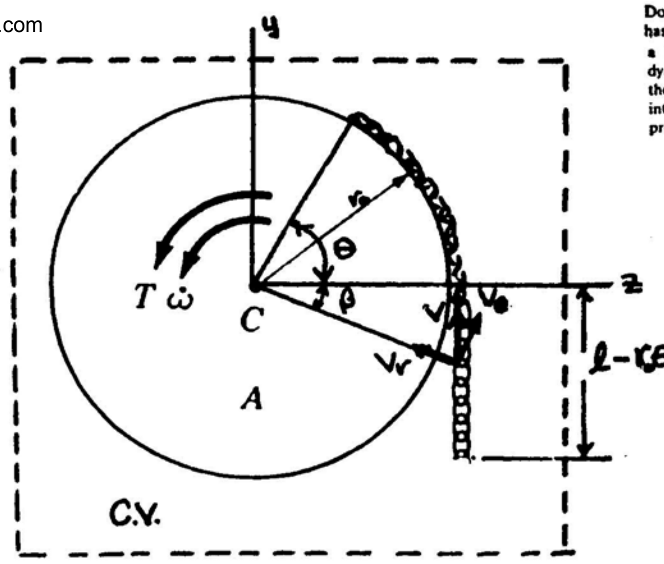


We can use the right side of Eq. (c) for the right side of the **angular momentum** equation. On the left side we must include the torque from the friction force. This torque $T_f$ is:

$$T_f = -(r_0)(\mu_d)[(w)(\ell - r_0\theta)] = -r_0\mu_d\left[(w)\left(\ell - r_0\frac{\kappa t^2}{2}\right)\right]$$

Hence, we have for the angular momentum equation

$$T_s - r_0\mu_d\left[w\left(\ell - \frac{r_0\kappa t^2}{2}\right)\right] = r_0\kappa\left(\frac{w}{g}\right)\ell + I\kappa$$

$$\therefore \quad T_s = r_0\kappa\left(\frac{w\ell}{g}\right) + I\kappa + r_0\mu_d w\left(\ell - \frac{r_0\kappa t^2}{2}\right)$$

http://ingesolucionarios.blogspot.com

# CHAPTER 5

http://ingesolucionarios.blogspot.com
Edu_Zegarr_ch

 http://ingesolucionarios.blogspot.com

The **first law of thermodynamics** for the control volume is as follows using gauge pressures:

$$\frac{V_1^2}{2} + 0 + 0 = \frac{V_2^2}{2} + (g)(3) + 0 + \frac{dW_s}{dm} \qquad (1)$$

A sump pump is a sealed pump usually underground that pumps water from its inlet at ① to above ground at ②. The inlet has an inside diameter of 75 mm and the outlet at ② has a diameter of 50 mm. A current of 10 amp is flowing at a voltage of 220 V to the pump. What is the maximum possible capacity of the pump? Neglect friction in the pipes and heat transfer. Take $p_1$ as $p_{atm}$.

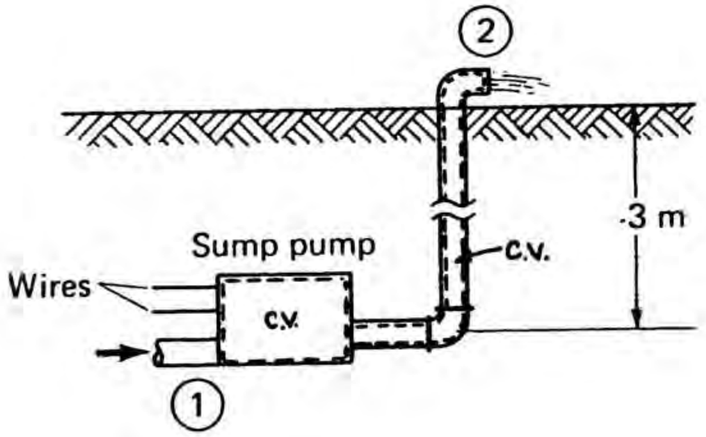


$$\frac{1}{2}\left[\frac{Q}{\frac{(\pi)(.075)^2}{4}}\right]^2 = \frac{1}{2}\left[\frac{Q}{\frac{\pi(.050)^2}{4}}\right]^2 + (9.81)(3) - \frac{(220)(10)}{(1{,}000)(\rho)}$$

$$(104.1 \times 10^3)Q^2 - \frac{2.20}{Q} + (3)(9.81) = 0$$

$$Q^3 + (2.827 \times 10^{-4})Q - 2.113 \times 10^{-5} = 0$$

Solve by trial and error.

$$\boxed{Q = .02425\ m^3/\text{sec} = 24.25\ L/\text{sec}}$$


http://ingesolucionarios.blogspot.com Edu_Zegarr_ch

 http://ingesolucionarios.blogspot.com

Air at an absolute pressure of 500 kPa and at a temperature of 35°C enters a highly insulated air motor and leaves as a free jet into the atmosphere at a temperature of −5°C. The inlet velocity is 25 m/s and the exit velocity is 70 m/s. If 3 kg of air flows per minute and if we take the internal energy, $u$, as $c_vT$, with $c_v$ as a constant giving the specific heat at constant volume, what power is developed by the air motor? Take the specific heat as $4.08 \times 10^{-5}$ N · m/(kg)(K). The atmospheric pressure is 101.4 kPa.

The **first law of thermodynamics** requires that

$$\frac{V_1^2}{2} + gz_1 + \frac{p_1}{\rho_1} + u_1 = \frac{V_2^2}{2} + gz_2 + \frac{p_2}{\rho_2} + u_2 + \frac{dW_S}{dm}$$

$$\frac{25^2}{2} + \frac{500\times10^3}{\rho_1} + (4.08\times10^{-5})(35+273) = \frac{70^2}{2} + \frac{101.4\times10^3}{\rho_2}$$

$$+ (4.08\times10^{-5})(-5+273) + \frac{dW_s}{dm}$$

Evaluating the terms we get:

$$\frac{dW_S}{dm} + \frac{101.4\times10^3}{\rho_2} - \frac{500\times10^3}{\rho_1} + 2.14\times10^3 = 0 \qquad (1)$$

Now use **Eq. of state** at (1) and (2) for a perfect gas. $p_1 = \rho_1 R_1 T_1$

$$500{,}000 = (\rho_1)(287)(273+35)$$

$$\rho_1 = 5.66\ kg/m^3$$

$$p_2 = \rho_2 RT_2 \qquad 101{,}400 = (\rho_2)(287)(-5+273)$$

$$\rho_2 = 1.318\ kg/m^3$$

Going back to Eq. (1) we get:

$$\frac{dW_S}{dm} = \frac{101.4\times10^3}{1.318} + \frac{500\times10^3}{5.66} - 2.14\times10^3$$

$$\frac{dW_S}{dt} = \frac{dW_S}{dm}\frac{dm}{dt} = (9{,}264)\left(\frac{3}{60}\right) = 463\ W \qquad \boxed{.463\ kW}$$


http://ingesolucionarios.blogspot.com Edu_Zegarr_ch

http://ingesolucionarios.blogspot.com

5.3

Steam enters a condenser at the rate of 600 kg/h with an enthalpy $h$ of $2.70 \times 10^6$ N · m/(kg). To condense the steam, water at 15°C is brought in at the ratio of 7 kg of water per kilogram of steam. The water enters through a pipe with a 75-mm inside diameter and mixes directly with the steam. The velocity of the entering steam is 120 m/s. What is the temperature of the water leaving the condenser at the same elevation as the water inlet in a pipe having an inside diameter of 100 mm? We may take the enthalpy of a liquid to be $c_pT$ where $c_p$, the specific heat at constant pressure, is given as 4210 N · m/(kg)(K) for water. Neglect heat transfer from the condenser to the surroundings.

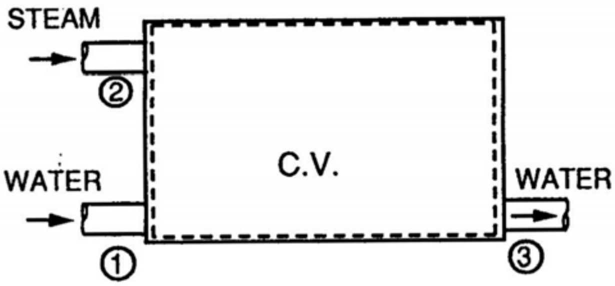


**First Law**

$$\left(\frac{V_1^2}{2} + h_1\right)\dot{m}_1 + \left(\frac{V_2^2}{2} + h_2\right)\dot{m}_2 = \left(\frac{V_3^2}{2} + h_3\right)(\dot{m}_1+\dot{m}_2) \tag{1}$$

**From continuity**

$$w_1 = \rho_1 V_1 A_1$$

$$\dot{m}_1 = \frac{(7)(600)}{3{,}600}$$

$$V_3 = \frac{\dfrac{[600+(7)(600)]}{3{,}600}}{(1{,}000)(\pi)\left(\dfrac{.100^2}{4}\right)} = .1698\ m/\text{sec}$$

Also

$$h_1 = c_pT_1 = (4{,}210)(273+15) = 1.212\times10^6$$

$$h_3 = c_pT_3 = (4{,}210)(T_3+273)$$

Now go to Eq. (1).

$$\left(\frac{.264^2}{2} + 1.212\times10^6\right)\frac{(7)(600)}{3{,}600} + \left(\frac{120^2}{2} + 2.70\times10^6\right)\left(\frac{600}{3{,}600}\right)$$

$$= \left[\frac{.1698^2}{2} + (4{,}210)(T_3+273)\right]\frac{(8)(600)}{3{,}600}$$

$$\boxed{T_3 = 59.38°C}$$



http://ingesolucionarios.blogspot.com Edu_Zegarr_ch

http://ingesolucionarios.blogspot.com

5.4

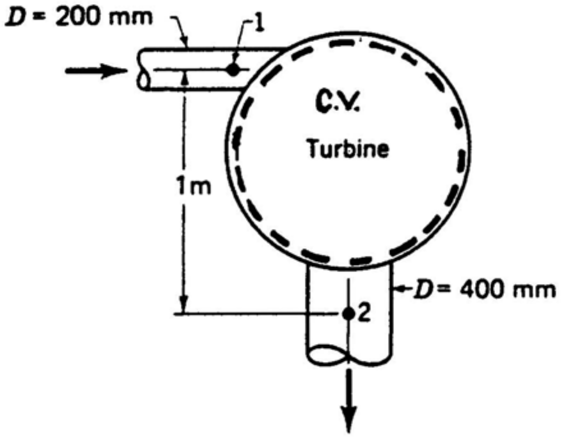


**Assumptions**

1. Neglect friction.
2. Take 1-D flow at 1 and 2.
3. Flow incompressible.
4. No heat transfer.
5. Flow steady.

Water moves steadily through the turbine shown at the rate of 220 L/s. The pressures at 1 and 2 are 170 kPa gage and −20 kPa gage, respectively. If we neglect heat transfer, what is the horsepower delivered to the turbine from the water?

**First Law**

$$\frac{V_1^2}{2} + (g)(1) + \frac{170{,}000}{1{,}000} = \frac{V_2^2}{2} + 0 + \left(\frac{-20{,}000}{1{,}000}\right) + \frac{dW_S}{dm} \qquad (1)$$

**Continuity**

$$\begin{cases} V_1 = \dfrac{\dfrac{220}{1{,}000}}{\dfrac{(\pi)(.200)^2}{4}} = 7.003 \ m/\text{sec} \\ V_2 = \left(\dfrac{.200}{.400}\right)^2 V_2 = 1.751 \ m/\text{sec} \end{cases}$$

Go back to Eq. (1).

$$\frac{7.003^2}{2} + 9.81 + 170 = \frac{1.751^2}{2} - 20 + \frac{dW_S}{dm}$$

$$\frac{dW_S}{dm} = 222.8 \ N\text{-}m/kg$$

$$\frac{dW_S}{dt} = \left(\frac{dW_S}{dm}\right)\left(\frac{dm}{dt}\right) = \frac{(222.8)(.220)(1{,}000)}{1{,}000}$$

**Power = 49.0 kW**

The flow rate through a turbine is 9000 kg/h, and the heat loss through the casing is 100,000 kJ/h. The inlet and exit enthalpies are 2300 kJ/kg and 1800 kJ/kg, respectively, while the inlet and exit velocities are 25 m/s and 115 m/s, respectively. Compute the shaft horsepower of the turbine.

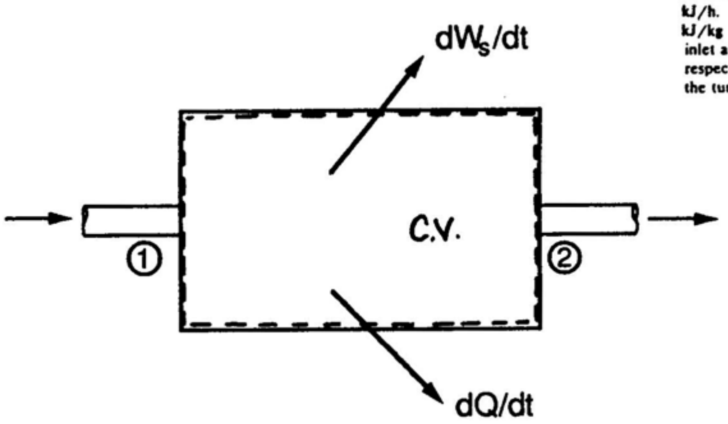


$$\dot{m} = 9{,}000\ kg/hr = 2.50\ kg/\text{sec.}$$

$$\frac{dQ}{dt} = 100{,}000\ kJ/hr = 27{,}778\ N\text{-}m/\text{sec}$$

$h = 2{,}300\ kJ/kg$ $\qquad h_2 = 1{,}800\ kJ/kg$

$V_1 = 25\ m/\text{sec}$ $\qquad$ *Assume*

$V_2 = 115\ m/\text{sec}$ $\qquad$ *Steady Flow*

Compute $\dfrac{dW_s}{dt}$

**First Law**

$$\frac{dQ}{dt} - \frac{dW_s}{dt} = \oiint \left(\frac{V^2}{2} + gz + h\right)(\rho \vec{V}\cdot d\vec{A}) + 0 - 27{,}778 - \frac{dW_s}{dt}$$

$$= \left[\left(\frac{V_2^2}{2} + h_2\right) - \left(\frac{V_1^2}{2} + h_1\right)\right](2.50)$$

$$\frac{dW_s}{dt} = -27{,}778 - \left[\left(\frac{115^2}{2} + 1{,}800\times10^3\right) - \left(\frac{25^2}{2} + 2{,}300\times10^3\right)\right](2.50)$$

$$\frac{dW_s}{dt} = 1.206\times10^6 W = 1.206\times10^3\ kW$$

**1,618 *HP***

http://ingesolucionarios.blogspot.com


It takes 50 hp to drive the centrifugal water pump. The pressure of the water at 2 is 30 lb/in² gage, and at 1, where the water enters, it is at 10 lb/in² gage. How much water is the pump delivering?

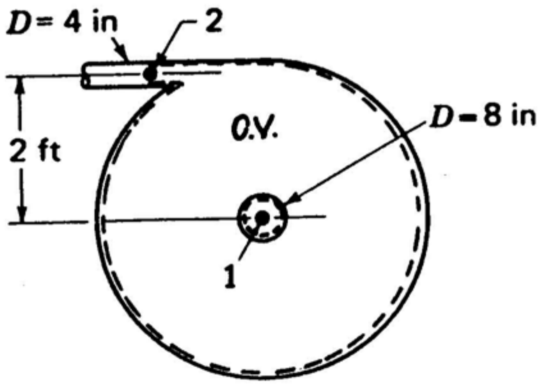


For the control volume shown assume:

**Assumptions**

1. Steady incompressible flow.
2. Negligible heat transfer.
3. 1-D flow at inlet and outlet.
4. Negligible change in internal energy of the water.

We start with the steady flow form of the **first law of thermodynamics.**

$$\frac{dQ}{dt} - \frac{dW_S}{dt} = \oiint_{c.s.}\left(\frac{V^2}{2} + gz_c + pv + u\right)\rho \vec{V}\cdot d\vec{A}$$

For the assumptions given, this becomes:

$$-(-50)(550) = \left[\left(\frac{V_2^2}{2} + (g)(2) + \frac{(44.7)(144)}{1.94} + u\right) - \left(\frac{V_1^2}{2} + \frac{(24.7)(144)}{1.94} + u\right)\right](1.94)(V_1)\left(\frac{\pi 4^2}{(4)(144)}\right)$$

Carrying out the arithmetic we have:

$$27{,}500 = \left(\frac{V_2^2}{2} + 64.4 + 1{,}485 - \frac{V_1^2}{2}\right)(.1692)V_2$$



http://ingesolucionarios.blogspot.com
Edu_Zegarr_ch

http://ingesolucionarios.blogspot.com
(cont.)

Collecting terms:

$$\left[\left(\frac{V_2^2}{2} - \frac{V_1^2}{2}\right) + 1{,}549\right](V_2) = 162{,}500 \qquad (1)$$

Now relate $V_1$ and $V_2$ by using the **continuity** equation for incompressible flow. Thus:

$$(V_2)\,\frac{(\pi)(4^2)}{(4)(144)} = (V_1)\,\frac{(\pi)(8)^2}{(4)(144)} \qquad \therefore \quad V_1 = \frac{1}{4}\,V_2$$

Now substitute Eq. (1).

$$\left[\frac{1}{2}\left(V_2^2 - \frac{V_2^2}{16}\right) + 1{,}549\right]V_2 = 162{,}500$$

$$.469V_2^3 + 1{,}549V_2 - 162{,}500 = 0$$

Dividing through by .469 we have: $\quad V_2^3 + 3{,}300V_2 - 347{,}000 = 0$

Solve by trial and error. $\quad V_2 = 55.1\ ft/sec$

$$\therefore \quad \boxed{Q = 4.8\ c.f.s.}$$


http://ingesolucionarios.blogspot.com Edu_Zegarr_ch

First write the **continuity equation** assuming steady flow.

$$(V_1)(5{,}200\times10^{-6}) = (V_3)(2{,}600\times10^{-6}) + (6)(1{,}300\times10^{-6})$$

$$\therefore \quad 4V_1 - 2V_3 = 6 \qquad \text{(a)}$$

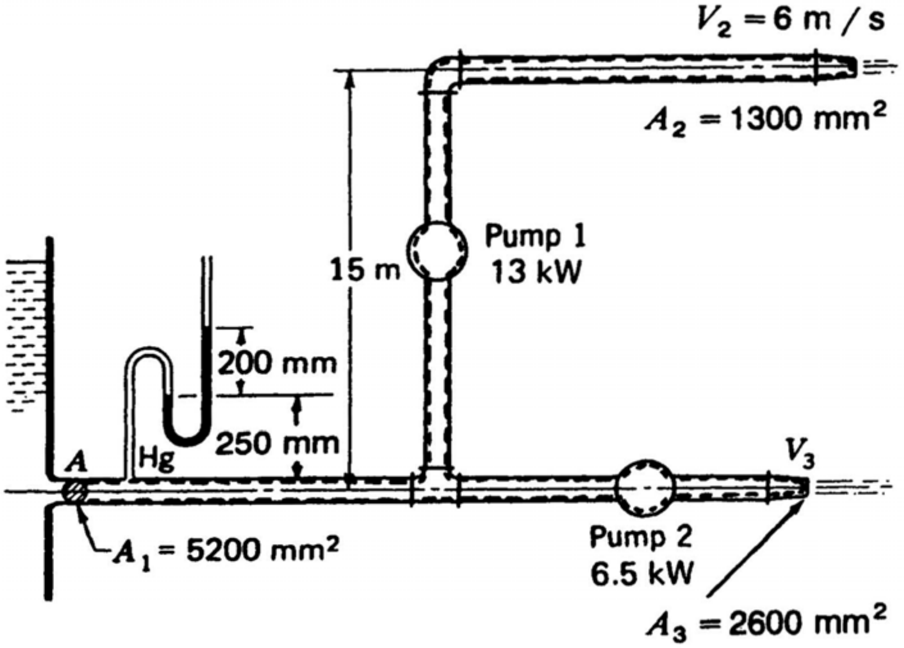


Shown is a system of highly insulated pipes through which water is flowing. In the upper pipe, the water leaving the pipe shows an increase of internal energy of 23 kJ/kg over the water entering at *A*; and the water leaving the lower pipe has an increase in internal energy of 116 kJ/kg (these increases are a result of friction in the flow). Compute the velocity $V_3$ for the data given in the diagram. Take the water as

Now express the **first law** for the C.V. for 1-D Steady Flow.

$$\left(\frac{V_1^2}{2} + p_1 \upsilon + g z_1 + u_1\right)\rho V_1 A_1 + (19.5\times10^3) = \left(\frac{V_2^2}{2} + p_2 \upsilon + g z_2 + u_2\right)\rho V_2 A_2$$

$$+ \left(\frac{V_3^2}{2} + p_3 \upsilon + g z_3 + u_3\right)\rho V_3 A_3$$

Using gauge pressures and the datum shown we have:

http://ingesolucionarios.blogspot.com
(cont.)

$$\left(\frac{V_1^2}{2} + p_1 \upsilon + 0 + 140\times10^3\right)(1{,}000)(V_1)(5{,}200\times10^{-6}) + 1.95\times10^3$$

$$= \left[\frac{V_2^2}{2} + 0 + (15)(9.81) + 163\times10^3\right](1{,}000)(V_2)(1{,}300\times10^{-6})$$

$$+ \left[\frac{V_3^2}{2} + 0 + 0 + 256\times10^3\right](1{,}000)(V_3)(2{,}600\times10^{-6})$$

For pressure $p_1$ we have

$$p_1 = (13.6)(9{,}806)(.200) + (9{,}806)(.250) = 29{,}124\ Pa$$

$$2.6V_1^3 + 151.4V_1 + 728\times10^3 V_1 + 19.5\times10^3$$

$$= .650V_2^3 + 212\times10^3 V_2 + 1.300V_3^3 + 666\times10^3 V_3$$

We know that $V_2 = 6\ m/\text{sec}$ . Hence:

$$\boxed{2.6V_1^3 + 728\times10^3 V_1 = 1.300V_3^3 + 666\times10^3 V_3 + 1.253\times10^6} \qquad \text{(b)}$$

http://ingesolucionarios.blogspot.com
5.8

**Assumptions:**

1. Steady flow.
2. No heat transfer.
3. No change in $V$.
4. 1-D flow.

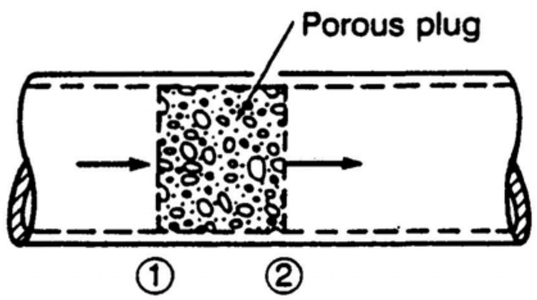


A gas undergoes steady flow through a porous plug in a *well insulated* pipe as shown in Fig. P6.8. Show that if we have no change in kinetic energy and no heat transfer that the enthalpy $h$ is conserved on going through the plug. This is an example of what is called a *throttling process* which mimics what occurs as a gas passes through a partially opened valve.

First Law:

$$\frac{V_1^2}{2} + \frac{p_1}{\rho_1} + u_1 + gz_z = \frac{V_0^2}{2} + \frac{p_2}{\rho_2} + u_2 + gz_2$$

$$\therefore \quad u_1 + p_1 \upsilon_1 = u_2 + p_2 \upsilon_2$$

$$\therefore \quad \boxed{h_1 = h_2}$$

5.9

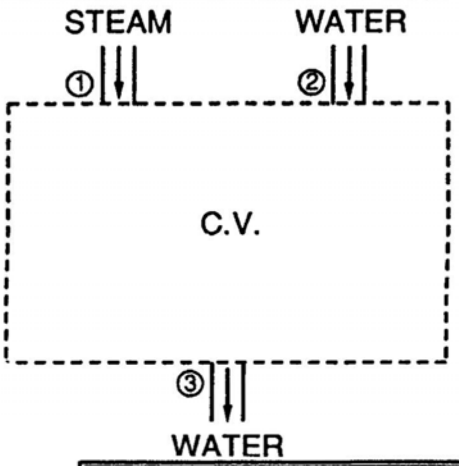


A jet condenser condenses steam into water by mixing a spray of water with exhaust steam from some device inside of a well-insulated tank. Water then leaves the tank. If entering steam has an enthalpy of 1200 Btu/lbm and enters at the rate of 300 lbm/h and if 4000 lb of water is injected per hour, what must the enthalpy of the incoming water be? The enthalpy of the water leaving the condenser is 120 Btu/lbm. Neglect kinetic and potential energy changes.

**Assumptions:**

1. 1-D flow in and out.
2. Steady flow.
3. No heat transfer through C.S.
4. Neglect changes in PE and KE.

First Law:

$$h_1 \frac{dm_1}{dt} + h_2 \frac{dm_2}{dt} = h_3\left(\frac{dm_1}{dt} + \frac{dm_2}{dt}\right)$$

$$(1{,}200)(300) + (h_2)(4{,}000) = (120)(4{,}300)$$

$$\boxed{h_2 = 39 \quad BTU/lbm}$$

5.10

In the preceding problem, if the enthalpy of the entering water is 41 Btu/lbm, what must be the heat loss per hour from the condenser?

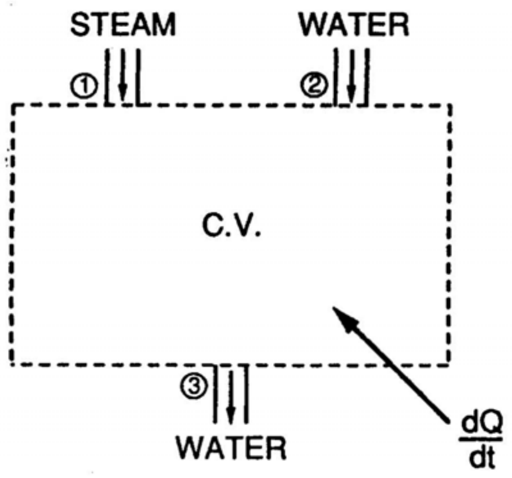


**Assumptions**

1. 1-D flow in and out.
2. Steady flow.
3. Neglect changes in PE and KE.

First Law:

$$h_1 \frac{dm_1}{dt} + h_2 \frac{dm_2}{dt} + \frac{dQ}{dt} = h_3\left(\frac{dm_1}{dt} + \frac{dm_2}{dt}\right)$$

$$(1{,}200)(300) + (41)(4{,}000) + \frac{dQ}{dt} = (120)(4{,}300)$$

$$\frac{dQ}{dt} = -8{,}000 \quad BTU/hour$$

$$Heat\ Loss\ Rate = 8{,}000 \quad BTU/hour$$

http://ingesolucionarios.blogspot.com

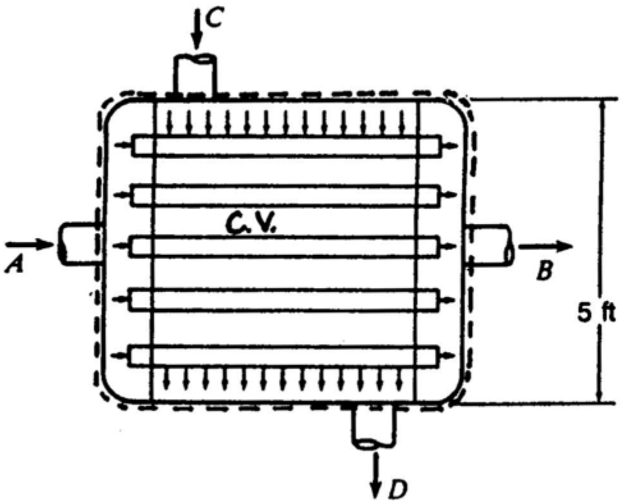


**Assumptions**

1. Steady flow.
2. No heat transfer out of C.V.
3. 1-D flows in and out.
3. Neglect changes in specific weight.
4. Neglect KE.

First Law:

$$\left(\frac{V_A^2}{2g} + z_A + h_A\right)\dot{m}_{WATER} + \left(\frac{V_C^2}{2g} + z_C + h_C\right)\dot{m}_{KER} = \left(\frac{V_B^2}{2g} + z_B + h_B\right)\dot{m}_{WATER} + \left(\frac{V_D^2}{2g} + z_D + h_D\right)\dot{m}_{KER} \quad (1)$$

A *heat exchanger* shown has water entering at $A$, going through a set of horizontal pipes, and leaving at $B$. The purpose of this flow is to heat a flow of kerosene entering the heat exchanger at $C$ and leaving at $D$ after passing over the horizontal pipes. Water comes in at $A$ at a temperature of 200°F and leaves at a temperature of 100°F. The kerosene is to be heated from 40°F to 120°F. If we are to heat 3 lbm/s of kerosene, what is the mass flow of water required? Diameters of pipes at $A$, $B$, $C$, and $D$ are equal. The heat exchanger is well insulated. Use the following formulations for specific enthalpy per pound mass of the fluids (where $t$ is in degrees Fahrenheit):

$$h_{water} = t - 32 \text{ Btu/lbm}$$

$$h_{kerosene} = 0.5t + 0.0003t^2 \text{ Btu/lbm}$$

Compute **enthalpies.**

$$h_A = (200-32) = 168 \ \frac{BTU}{lbm} = 1.307\times10^5 \ \frac{ft-lb}{lbm}$$

$$h_B = (100-32) = 68 \ \frac{BTU}{lbm} = 5.290\times10^4 \ \frac{ft-lb}{lbm}$$

$$h_C = [(.5)(40) + (.0003)(40)^2](778) = 1.593\times10^4 \ \frac{ft-lb}{lbm}$$

$$h_D = [(.5)(120) + (.0003)(120)^2](778) = 5.004\times10^4 \ \frac{ft-lb}{lbm}$$

Subst. into (1).

$$(2.5 + 1.307\times10^5)\dot{m}_{WATER} + (5+1.593\times10^4)(3) = (2.5+5.290\times10^4)\dot{m}_{WATER} + (0+5.004\times10^4)(3)$$

$$7.78\times10^4\dot{m}_{WATER} = 1.023\times10^5$$

$$\boxed{\dot{m}_{WATER} = 1.315 \ \frac{lbm}{sec} = 4{,}734 \ \frac{lbm}{hr}}$$

http://ingesolucionarios.blogspot.com

In Prob. 5.11 what is the heat transfer from the heat exchanger to the atmosphere if the amount of water used is 5000 lbm/h for the conditions given in this problem, and the exit temperature of the kerosene is 100°F?

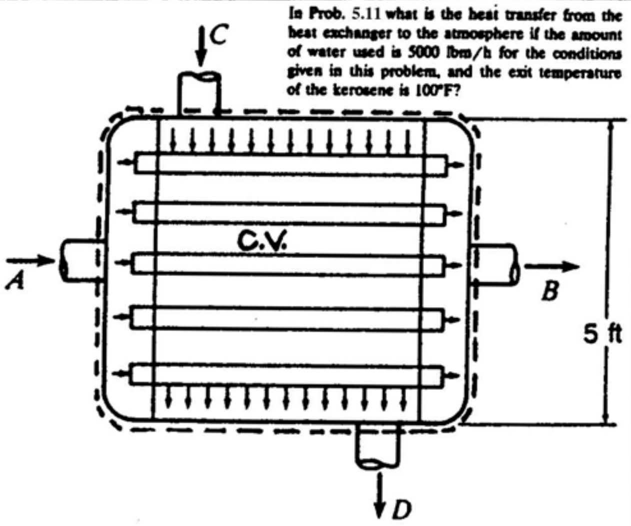


**Assumptions**

1. Steady flows.
2. 1-D flow in and out.
3. Neglect KE.
4. Neglect changes in specific wt.

**Enthalpies**

$$h_A = (200-32)(778) = 1.307\times10^5 \ \frac{ft\text{-}lb}{lbm}$$

$$h_B = (100-32)(778) = 5.290\times10^4 \ \frac{ft\text{-}lb}{lbm}$$

$$h_C = [(.5)(40) + (.0003)(40^2)](778) = 1.593\times10^4 \ \frac{ft\text{-}lb}{lbm}$$

$$h_D = [(.5)(100) + (.0003)(100^2)](778) = 4.123\times10^4 \ \frac{ft\text{-}lb}{lbm}$$

First Law:

$$\frac{dQ}{dt} + \left(\frac{V_A^2}{2g} + z_A + h_A\right)\dot{m}_{WATER} + \left(\frac{V_C^2}{2g} + z_C + h_C\right)\dot{m}_{KER} = \left(\frac{V_B^2}{2g} + z_B + h_B\right)\dot{m}_{WATER} + \left(\frac{V_D^2}{2g} + z_D + h_D\right)\dot{m}_{KER}$$

$$\frac{dQ}{dt} + (2.5+1.307\times10^5)(5{,}000)\left(\frac{1}{3{,}600}\right) + (5+1.593\times10^4)(3)$$

$$= (2.5+5.290\times10^4)\left(\frac{5{,}000}{3{,}600}\right) + (0+4.123\times10^4)(3) = -3.217\times10^4 \ \frac{ft\text{-}lb}{sec}$$

$$\therefore \ \frac{dQ}{dt} = -\frac{(3.217\times10^4)(3{,}600)}{778} = -1.489\times10^5 \ \frac{BTU}{hr}$$

http://ingesolucionarios.blogspot.com

5.13

A gas turbine is idling at steady state incurring very little heat transfer with the surroundings. Preheated air at a temperature of 400°F enters the *combustion chamber* of the gas turbine at the rate of 40 lbm/s with a velocity of 340 ft/s. Liquid fuel is brought in at the rate of 68 parts by weight of air to fuel. The liquid fuel is at 60°F. The combustion products leave the combustion chamber at a temperature of 1400°F, a velocity of 680 ft/s, and an enthalpy of 360 Btu/lbm. What is the enthalpy of the entering fuel? The enthalpy of the preheated air is given as

$$h = 124.3 + \int_{60}^{T} c_p \, dT \text{ Btu/lbm}$$

where the reference enthalpy is taken at 60°F and $T$ is in degrees Fahrenheit. Also for air we have at low pressure

$$c_p = 0.219 + \frac{0.342T}{10^4} - \frac{0.293T^2}{10^8} \text{ Btu/lbm °R}$$

where $T$ is in degrees Rankine.

## Assumptions

1. Neglect KE of entering fuel.
2. Steady flow.
3. No heat transfer.
4. 1-D flows at C.S.
5. Neglect PE.

Find **enthalpy of air**.

$$h_1 = 124.3 + \int_{60}^{400}\left[.219 + \frac{.342}{10^4}(460+T) - \frac{.293}{10^8}(460+T)^2\right]dT$$

$$h_1 = 124.3 + (.219)(340) + \frac{.342}{10^4}\left[(460)T + \frac{T^2}{2}\right] - \frac{.293}{10^8}\left(460^2 T + (2)(460)\frac{T^2}{2} + \frac{T^3}{3}\right)\Bigg|_{60}^{400}$$

$$h_1 = 124.3 + 74.46 + \frac{.342}{10^4}\left[(460)(340) + \frac{1}{2}(400^2-60^2)\right]$$

$$- \frac{.293}{10^8}\left[(460^2)(340) + 460(400^2-60^2) + \frac{1}{3}(400^3-60^3)\right] = 206.3 \quad \frac{BTU}{lbm}$$

**First Law:**

$$\left(h_1 + \frac{V_1^2}{2} + gz_1\right)\dot{m}_1 + \left(h_2 + \frac{V_2^2}{2} + gz_2\right)\frac{\dot{m}_1}{68} = \left(h_3 + \frac{V_3^2}{2} + gz_3\right)\dot{m}_3$$

**Continuity:**

$$\dot{m}_1 + \frac{\dot{m}_1}{68} = \dot{m}_3 \qquad \dot{m}_3 = 40\left(1 + \frac{1}{68}\right) = 40.59 \quad \frac{lbm}{sec}$$

Subst. Note $V^2/2$ is ft-lb/slug. Convert to lbm.

$$\left[(206.3)(778) + \frac{340^2}{2g}\right](40) + [(h_{fuel})(778)]\frac{40}{68} = \left[(360)(778) + \frac{680^2}{2g}\right](40.59)$$

$$h_{fuel} = 1.129\times10^4 \quad \frac{BTU}{lbm}$$



http://ingesolucionarios.blogspot.com Edu_Zegarr_ch

http://ingesolucionarios.blogspot.com

If in Prob. 6.13 the enthalpy of the liquid fuel is 12,000 Btu/lbm, what is the heat loss per second from the combustion chamber?

**Assumptions**

1. Neglect KE of liquid fuel.
2. Steady flow.
3. 1-D flow at C.S.
4. Neglect PE.

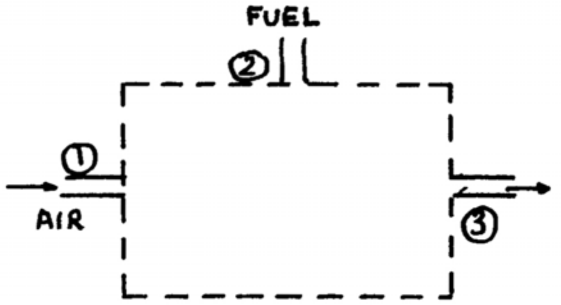


$$h_1 = 124.3 + \int_{60}^{400} \left[ .219 + \frac{.342}{10^4}(460+T) - \frac{.293}{10^8}(460+T)^2 \right] dT$$

$$h_1 = 2060 \ \text{ BTU/lbm}$$

**First Law:**

$$\frac{dQ}{dt} + (h_1 + \frac{V_1^2}{2} + gz_1)\dot{m}_1 + \left(h_2 + \frac{V_2^2}{2} + gz_2\right)\frac{\dot{m}}{68} = \left(h_3 + \frac{V_3^2}{2} + gz_3\right)\dot{m}_3$$

**Continuity:**

$$\dot{m}_1 + \frac{\dot{m}_1}{68} = \dot{m}_3$$

$$\dot{m}_3 = 40\left(1 + \frac{1}{68}\right) = 40.59 \quad \frac{lbm}{sec}$$

$$\therefore \quad \frac{dQ}{dt} + \left[(2060)(778) + \frac{340^2}{2g}\right](40) + [(12{,}000)(778)]\frac{40}{68} = \left[(360)(778) + \frac{680^2}{2g}\right]40.59$$

$$\frac{dQ}{dt} = -203.1 \ \text{ BTU/sec}$$

http://ingesolucionarios.blogspot.com

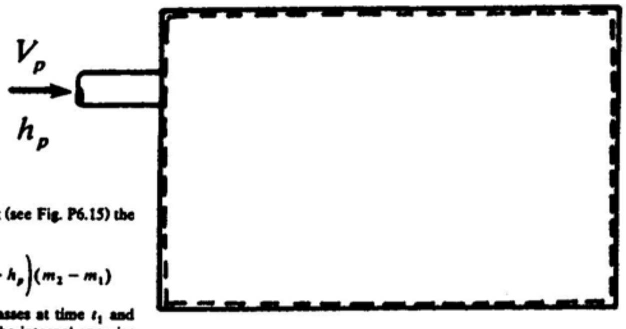


Show that for flow into a tank (see Fig. P6.15) the first law can be given as

$$Q = (U_2 - U_1) - \left(\frac{V_p^2}{2} + h_p\right)(m_2 - m_1)$$

where $m_1$ and $m_2$ are the masses at time $t_1$ and $t_2$ and where $U_1$ and $U_2$ are the internal energies in the tank at these times. List the assumptions needed to get the above result. Take $V_p$ and $h_p$ as constant.

**First Law:**

$$\frac{dQ}{dt} = \oiint \left(\frac{V_p^2}{2} + h\right)(\rho \vec{V} \cdot d\vec{A}) + \frac{\partial}{\partial t}\iiint e(\rho d\upsilon)$$

1) **Assume** 1-D flow in use: $-\iiint \rho \vec{V} \cdot dA = \frac{dm}{dt}$

2) **Assume** main flow is not disturbed and that $\frac{V^2}{2} + h$ does not change

$$\therefore \quad \frac{dQ}{dt} = \left(\frac{V_p^2}{2} + h\right)\frac{dm}{dt} + \frac{dE}{dt}$$

where $E$ is the stored energy. Integrate

$$Q = \left(V_p^2 + h_p\right)(m_1 - m_2) + E_2 - E_1$$

3) **Neglect PE and KE** in container. Hence only **internal energy** is present in $E$.

$$Q = (U_2 - U_1) - \left(\frac{V_p^2}{2} + h_p\right)(m_2 - m_1)$$


http://ingesolucionarios.blogspot.com Edu_Zegarr_ch

http://ingesolucionarios.blogspot.com

5.16

**If friction is neglected, what is the velocity of the water issuing from the tank as a free jet? What is the discharge rate?**

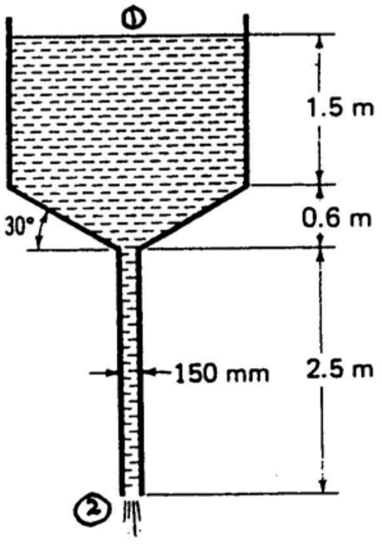


a) Use **Bernoulli** for any stream tube from (1) to (2). The water issues out as a free jet.

$$\frac{V_1^2}{2} + \frac{p_1}{\rho} + gz_1 = \frac{V_2^2}{2} + \frac{p_2}{\rho} + gz_2$$

Neglect the velocity at (1). Cancelling $p_1/\rho$ with $p_2/\rho$, we get

$$gz_1 = \frac{V_2^2}{2}$$

$$\therefore \quad V_2 = \sqrt{2gz_1} = \sqrt{(2)(9.81)(4.6)} = 9.50 \; m/\text{sec}$$

$$Q = \frac{(9.50)(\pi)(.150)^2}{4} = \boxed{.1679 \; m^3/s}$$



http://ingesolucionarios.blogspot.com Edu_Zegarr_ch

http://ingesolucionarios.blogspot.com

5.17

One end of a U tube is oriented directly into the flow so that the velocity of the stream is zero at this point. The pressure at a point in the flow which has been stopped in this way is called the *stagnation pressure*. The other end of the U tube measures the "undisturbed" pressure at a section in the flow. Neglecting friction, determine the volume flow of water in the pipe.

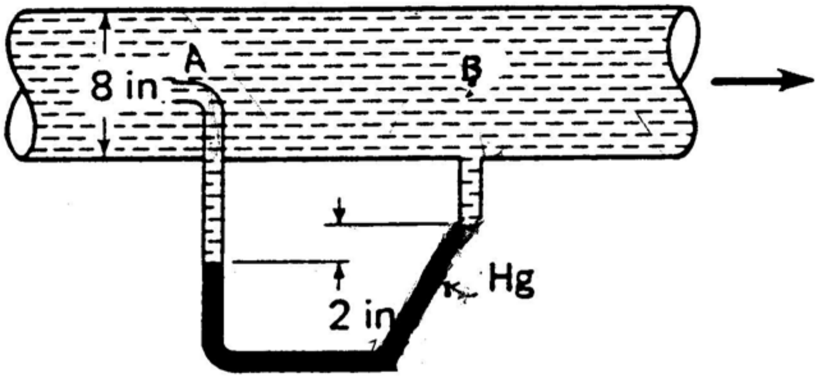


Use **Bernoulli's** equation between points A and B. Thus:

$$\frac{p_A}{\rho} = \frac{p_B}{\rho} + \frac{V_B^2}{2}$$

$$\therefore \quad \frac{V_B^2}{2} = \frac{p_A - p_B}{\rho} \qquad (1)$$

For **manometry** we have for $p_A - p_B$

$$p_A - p_B = (\gamma_{Hg} - \gamma_{H_2O})\left(\frac{2}{12}\right) = (12.6)(62.4)\left(\frac{2}{12}\right) = 131.0 \; psf$$

From Eq. (1)

$$V_B = \sqrt{\frac{(2)(131.0)}{1.938}} = 11.62 \; ft/\text{sec}$$

$$Q = (11.62)\,\frac{(\pi)(8^2)}{(4)(144)} = \boxed{4.06 \; cfs}$$

http://ingesolucionarios.blogspot.com

**5.18** Use **Bernoulli's** equation between points A and B. Thus:

Compute the ideal flow rate through the pipe system shown in Fig. P6.18 *Hint:* Read Prob. 6.17.

$$\frac{V_A^2}{2} + \frac{p_A}{\rho} + (g)(.6)\sin 30° = \frac{p_B}{\rho}$$

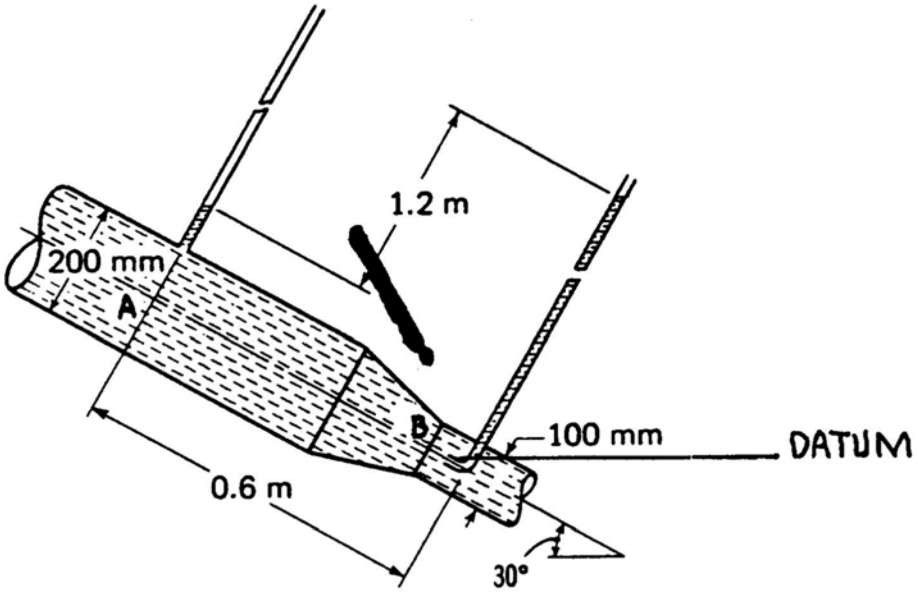


$$\therefore \quad \frac{V_A^2}{2} = \frac{p_B - p_A}{\rho} - 2.94 \qquad (1)$$

We get $p_B - p_A$ from **manometry**. Thus:

$$p_B - p_A = (1.2)\sin 60°(9{,}806) = 10.19\ kPa$$

Subst. into (1):

$$\frac{V_A^2}{2} = \frac{10.19\times10^3}{(1{,}000)} - 2.94$$

$$V_A = 3.81\ m/\text{sec}$$

$$Q = (3.81)\ \frac{(\pi)(.200)^2}{4} = .1197\ m^3/\text{sec}$$

5.19 http://ingesolucionarios.blogspot.com

A cylindrical tank contains air, oil, and water. On the oil a pressure $p$ of 5 lb/in$^2$ gage is maintained. What is the velocity of the water leaving if we neglect both friction everywhere and the kinetic energy of the fluid above elevation $A$? The jet of water leaving has a diameter of 1 ft.

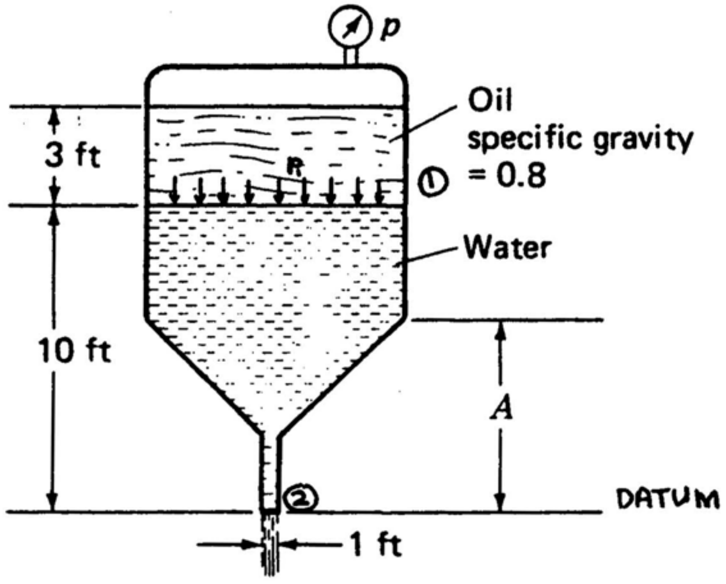


The pressure $p_1$ is determined from **hydrostatics** to be:

$$p_1 = p + (3)(\gamma_{H_2O})(.8) = (5)(144) + (3)(62.4)(.8) = 870 \text{ } psf \text{ } gauge$$

Now use **Bernoulli** between (1) and (2).

$$\cancel{\frac{V_1^2}{2}}^{0} + (10)(g) + \frac{870}{1.94} = \frac{V_2^2}{2}$$

$$\boxed{V_2 = 39.3 \ ft/sec}$$



http://ingesolucionarios.blogspot.com Edu_Zegarr_ch

**A large tank contains compressed air, gasoline at specific gravity 0.68, light oil at specific gravity 0.80, and water. The pressure $p$ of the air is 150 kPa gage. If we neglect friction, what is the mass flow $\dot{m}$ of oil from a 20-mm diameter jet?**

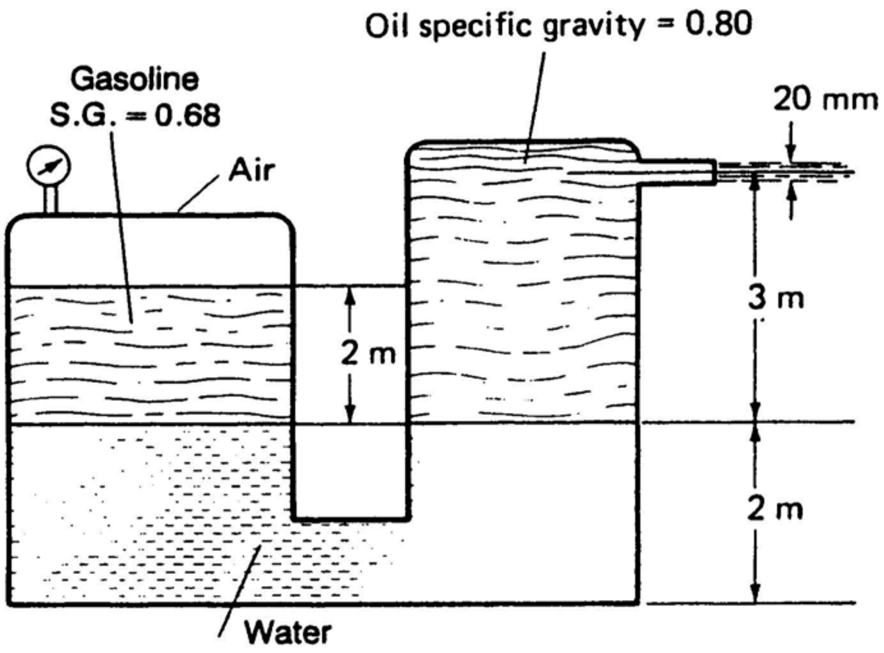


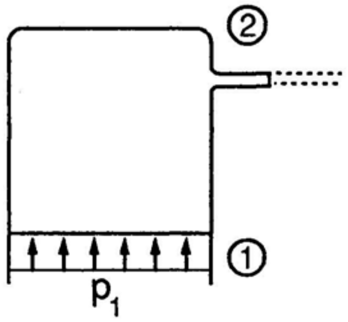


Find $p_1$ using **hydrostatics.**

$$p_1 = 150\times10^3 + (9{,}806)(.680)(2) = 163.3\ kPa$$

Now use **Bernoulli** between (1) and (2). Neglecting the $KE$ at (1), we have:

$$\frac{163{,}300}{(1{,}000)(.80)} = \frac{V_2^2}{2} + (g)(3)$$

$$V_2 = 18.69\ m/sec$$

$$\dot{m} = (18.69)(1{,}000)(.8)\left(\pi\ \frac{.020^2}{4}\right)$$

$$= 4.70\ kg/sec$$

http://ingesolucionarios.blogspot.com

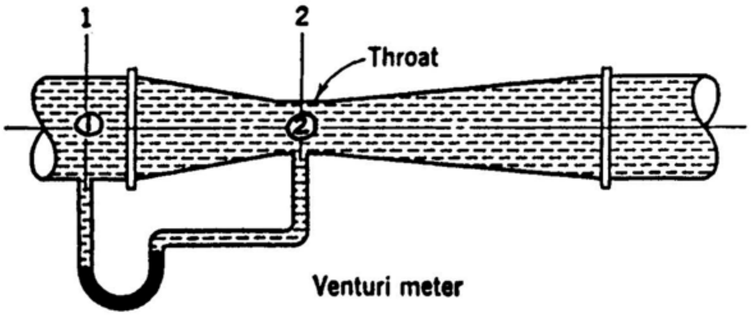


A *venturi meter* is a device which is inserted into a pipe line to measure incompressible-flow rates. It consists of a convergent section which reduces the diameter to between one-half and one-fourth the pipe diameter. This is followed by a divergent section. The pressure difference between the position just before the venturi and at the throat of the venturi is measured by a differential manometer as shown. Show that

$$q = c_d\left[\frac{A_2}{\sqrt{1-(A_2/A_1)^2}}\sqrt{2g\frac{p_1-p_2}{\gamma}}\right]$$

where $c_d$ is the *coefficient of discharge*, which takes into account frictional effects and is determined experimentally.

First neglect friction entirely. Using **Bernoulli** between 1 and 2 we have:

$$\frac{V_1^2}{2} + \frac{p_1}{\rho} = \frac{V_2^2}{2} + \frac{p_2}{\rho}$$

$$V_1^2 - V_2^2 = 2g\,\frac{p_2-p_1}{\gamma} \tag{1}$$

Now use the **continuity** requirement for incompressible flow:

$$V_1A_1 = V_2A_2 \qquad \therefore \quad V_1 = \frac{A_2}{A_1}\,V_2 \tag{2}$$

Substitute into Eq. (1).

$$\left[\left(\frac{A_2}{A_1}\right)^2 - 1\right]V_2^2 = 2g\,\frac{p_2-p_1}{\gamma}$$

Multiplying through by -1 and solving for $V_2$ we get:

$$V_2 = \left[\frac{1}{1-\left(\frac{A_2}{A_1}\right)^2}\,2g\,\frac{p_1-p_2}{\gamma}\right]^{\frac{1}{2}}$$

Now the discharge can be given as: $Q = C_dV_2A_2$

Hence using the above result for $V_2$ we have:

$$Q = C_d\,\frac{A_2}{\sqrt{1-\left(\frac{A_2}{A_1}\right)^2}}\sqrt{2g\,\frac{p_1-p_2}{\gamma}}$$

http://ingesolucionarios.blogspot.com
Edu_Zegarr_ch

http://ingesolucionarios.blogspot.com

5.22

Another way of measuring flow rates is to use the *flow nozzle*, which is a device inserted into the pipe as shown [illegible] is the exit area of the flow nozzle, show that for incompressible flow we get for $q$

$$q = c_d\left[\frac{A_2}{\sqrt{1-(A_2/A_1)^2}}\sqrt{2g\frac{p_1-p_2}{\gamma}}\right]$$

where $c_d$ is the *coefficient of discharge*, which takes into account frictional effects and is determined experimentally.

Express **Bernoulli's** equation between (a) and (b).

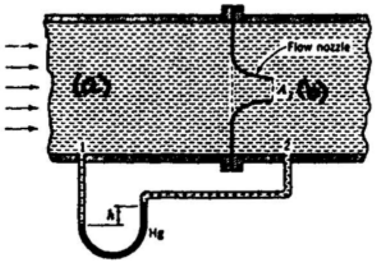


$$\frac{p_a}{\rho} + \frac{V_1^2}{2} = \frac{p_b}{\rho} + \frac{V_2^2}{2}$$

$$V_1^2 = V_2^2 + 2\,\frac{p_b - p_a}{\rho}$$

But $p_b - p_a = p_2 - p_1$ . Also from **continuity** we have:

$$V_2 = \frac{A_1}{A_2}\,V_1$$

$$\therefore\quad (V_1^2)\left[1 - \left(\frac{A_1}{A_2}\right)^2\right] = 2\,\frac{p_2 - p_1}{\rho}$$

$$V_1 = \sqrt{\frac{1}{1-\left(\frac{A_1}{A_2}\right)^2}\,2g\,\frac{p_2-p_1}{\gamma}}$$

$$Q = C_d V_1 A_1 = C_d\sqrt{\frac{A_1^2}{1-\left(\frac{A_1}{A_2}\right)^2}\,2g\,\frac{p_2-p_1}{\gamma}}$$

Another form is found by multiplying $\left(\frac{A_2}{A_1}\right)^2$ in the numerator and denominator of the root. We get

$$Q = C_d\sqrt{\frac{A_2^2}{1-\left(\frac{A_2}{A_1}\right)^2}\,2g\,\frac{p_1-p_2}{\gamma}}$$


http://ingesolucionarios.blogspot.com Edu_Zegarr_ch

http://ingesolucionarios.blogspot.com
5.23

In Prob. 5.22 express $q$ in terms of $h$, the height of the mercury column, as shown in Fig. P6.22 and the diameters of the pipe and flow nozzle.

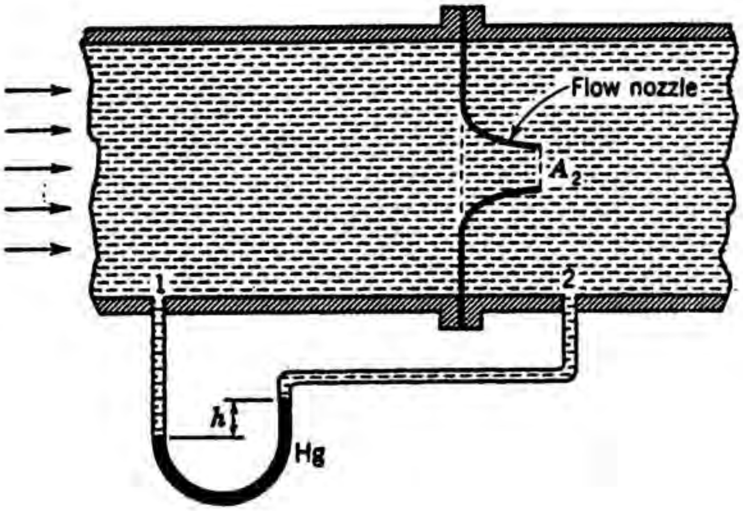


$$p_1 - p_2 = (\gamma_{Hg} - \gamma_{H_2O})h$$

$$\therefore \quad Q = C_d \frac{\dfrac{\pi D_2^2}{4}}{\sqrt{1 - \left(\dfrac{D_2^2}{D_1^2}\right)^2}} \sqrt{\frac{2g(\gamma_{Hg} - \gamma_{H_2O})h}{\gamma_{H_2O}}}$$


http://ingesolucionarios.blogspot.com
Edu_Zegarr_ch

 http://ingesolucionarios.blogspot.com

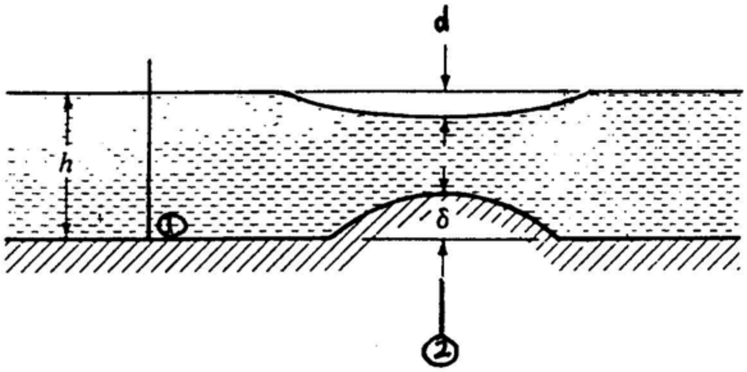


In Probs. 5.21 and 5.22 we considered methods of measuring the flow in a *pipe*. Now we consider the measurement of flow in a rectangular *channel* of uniform width. A hump of height $\delta$ is placed on the channel bed over its entire width. The free surface then has a dip $d$ as shown. If we neglect friction we can consider that we have one-dimensional flow. Compute the flow $q$ for the channel per unit width. This system is called a *venturi flume*.

Consider **Bernoulli** between (1) and (2) using gauge pressure and the free surface.

$$\frac{V_1^2}{2} + gh = \frac{V_2^2}{2} + g(h-d)$$

$$\therefore \quad V_1^2 = V_2^2 - 2gd \qquad (1)$$

Now use **continuity** between the sections (1) and (2):

$$(V_1)(h)(1) = (V_2)(h-d-\delta)(1)$$

$$V_2 = \left(\frac{h}{h-d-\delta}\right)V_1 \qquad (2)$$

Substitute for $V_2$ using Eq. (2).
$$V_1^2 = V_1^2\left(\frac{h}{h-d-\delta}\right)^2 - 2gd$$

$$V_1^2\left[1 - \left(\frac{h}{h-d-\delta}\right)^2\right] = -2gd$$

$$V_1 = \left[\frac{-2gd}{1 - \left(\frac{h}{h-d-\delta}\right)^2}\right]^{1/2}$$

Hence

$$q = (h)(V_1) = \left[\frac{-2gd}{\frac{1}{h^2} - \left(\frac{1}{h-d-\delta}\right)^2}\right]^{1/2}$$

http://ingesolucionarios.blogspot.com

5.25

A *siphon* is shown If we neglect friction entirely, what is the velocity of the water leaving at *C* as a free jet? What are the pressures of the water in the tube at *B* and at *A*?

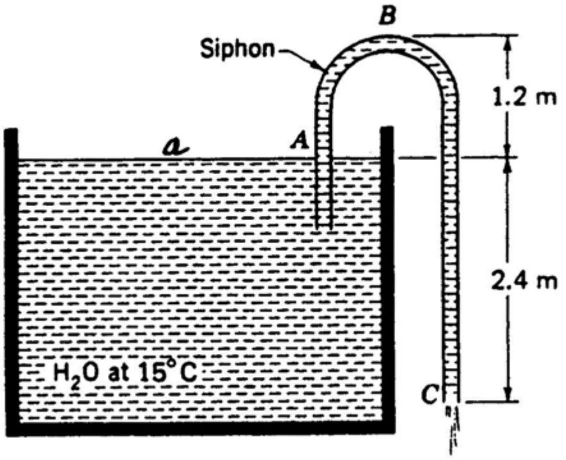


a) Use **Bernoulli** between *a* on the free surface and *C*. Neglect the velocity at *a*.

$$\frac{p_{atm}}{\rho} + (2.4)(g) = \frac{V_C^2}{2} + \frac{p_{atm}}{\rho}$$

$$V_C = 6.86\ m/sec$$

b) The pressure at *A* inside the tube is determined using **Bernoulli** between *A* and *C*.

$$\frac{V_A^2}{2} + \frac{p_A}{\rho} + (2.4)(g) = \frac{V_C^2}{2} + \frac{p_{atm}}{\rho}$$

But $V_A = V_C$ from **continuity.**

$$(p_A - p_{atm}) = -(2.4)(9.81)(\rho) = -(2.4)(9.81)(1{,}000) = -23.5\ kPa$$

c) At position *B* we use **Bernoulli** between *B* and *C*.

$$\frac{p_B}{\rho} + \frac{V_B^2}{2} + (3.6)(g) = \frac{p_{atm}}{\rho} + \frac{V_C^2}{2}$$

$$p_B - p_{atm} = -(\rho)(3.6)(9.81) = -35.3\ kPa$$

$$p_B = -35.3\ kPa\ gauge$$

http://ingesolucionarios.blogspot.com
Edu_Zegarr_ch

http://ingesolucionarios.blogspot.com

**If the vapor pressure of water at 15°C is given in the handbook as 0.1799 m of water, how high $h$ above the free surface can point $B$ be before the siphon action breaks down?**

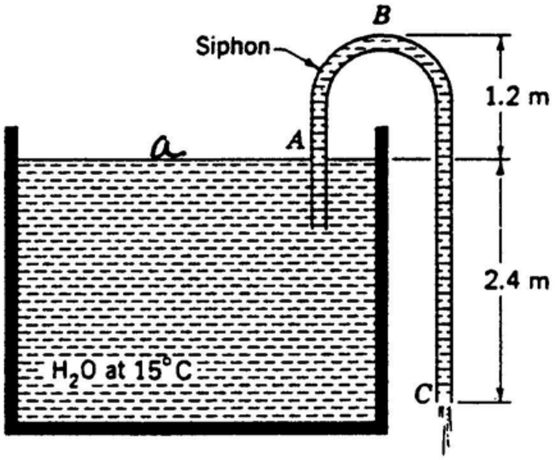


Use **Bernoulli** between point $a$ on the free surface and point $B$. Now we take the pressure at $B$ to be

$$p_B = (.1799)(9{,}806) = 1.764 \; kPa \; abs$$

Neglecting $V_A^2/2$ and using the free surface as the datum plane:

$$\frac{p_{atm}}{\rho} = \frac{1.764\times10^3}{\rho} + (h)(9.81) + \frac{V_B^2}{2}$$

To get maximum $h$ we use $V_B = 0$. Hence:

$$h = \frac{101.3\times10^3}{(1{,}000)(9.81)} - \frac{1.764\times10^3}{(1{,}000)(9.81)} = \boxed{10.15 \; m}$$

5.27

Water is flowing in a rectangular channel, as shown . The bed of the channel drops an amount $H$. Show that three values of $y$ are theoretically possible. Now by rough graphical consideration of the function yielding the three roots for $y$, show that only two roots $y_1$ and $y_2$ are positive and hence physically meaningful. The flow corresponding to $y_1$ is called *shooting flow* and the flow corresponding to $y_2$ is called *tranquil flow*, as you will see in Chap. 14. Neglect friction and consider one-dimensional flow upstream and downstream of the drop.

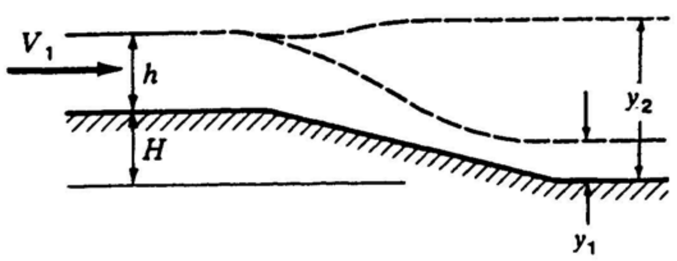


We use **Bernoulli** between the free surface at sections upstream and downstream. The lower bed is the datum and we use gauge pressure.

$$\frac{V_1^2}{2} + (g)(H+h_1) = \frac{V_2^2}{2} + (g)(y) \qquad (1)$$

Now use **continuity** between upstream and downstream sections.

$$V_1 h = V_2 y \qquad \therefore \quad V_2 = \frac{V_1 h}{y} \qquad (2)$$

Substitute (2) into (1). $$\frac{V_1^2}{2} + (g)(H+h) = \left(\frac{V_1 h}{y}\right)^2\left(\frac{1}{2}\right) + (g)(y)$$

Multiply by $y^2$. $$y^2\left[\frac{V_1^2}{2} + gH + gh\right] = \frac{V_1^2 h^2}{2} + gy^3$$

$$y^3 - \left(\frac{1}{g}\right)\left(\frac{V_1^2}{2} + gH + gh\right)y^2 + \frac{V_1^2 h^2}{2g} = 0$$

We have a cubic equation for which we expect 3 roots. Let us plot the left side of the equation which we denote as $f(y)$.

When $y \to -\infty$, $f(y) \to (-\infty)$. When $y \to +\infty$, $f(y) \to +\infty$. When $y = 0$, $f = \dfrac{V_1^2 h^2}{2g}$ as shown.

http://ingesolucionarios.blogspot.com

(cont.)

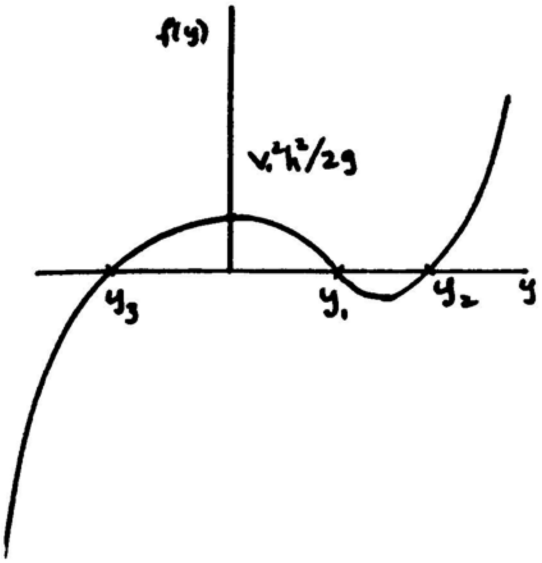


When $|y|$ is larger than zero, $f(y)$ decreases and when $y$ gets larger negatively, the function $f(y)$ continues to increase negatively. Thus, the curve shown must be the right shape. There is then one negative root and two positive roots $y_1$ and $y_2$. These are determined by trial and error.

http://ingesolucionarios.blogspot.com Edu_Zegarr_c

http://ingesolucionarios.blogspot.com

5.28

Water is moving with high velocity $V_1$ in a rectangular channel. There is a rise of height $H$ in the channel bed. Show that to the right of this rise there are three depths given by the fluids calculations. By rough graphical considerations of the equation yielding the three roots, show that only two roots $y_1$ and $y_2$ are meaningful. Neglect friction and consider one-dimensional flow at the sections shown downstream and upstream of the rise.

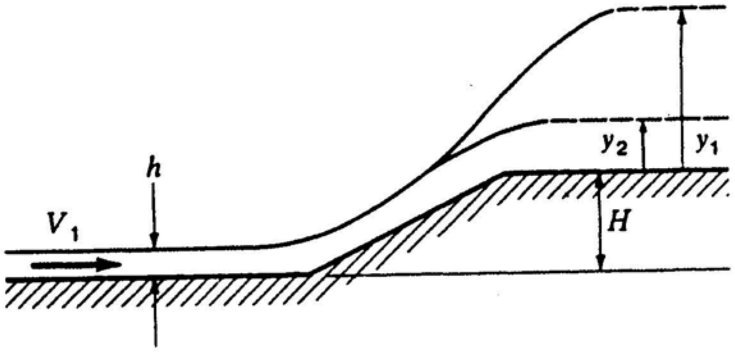


We use **Bernoulli** between sections upstream and downstream. For the free surface streamline and using gauge pressures we have, taking the lower bed as datum:

$$\frac{V_1^2}{2} + gh = \frac{V_2^2}{2} + (g)(H+y) \qquad (1)$$

From **continuity** we get per unit width

$$V_1(h)(1) = V_2(y)(1) \qquad \therefore \; V_2 = \frac{h}{y} V_1 \qquad (2)$$

Subst. into (1).

$$\frac{V_1^2}{2} + gh = \frac{1}{2}\frac{h^2}{y^2} V_1^2 + g(H+y)$$

Regroup and multiply by $y^2$ .

$$y^3 - \frac{1}{g}\left(\frac{V_1^2}{2} + gh - gH\right)y^2 + \frac{V_1^2 h^2}{2g} = 0$$

We will get three roots. We now plot the left side of the above equation versus $y$.

$$\text{when} \begin{cases} y = 0 \quad , \; f = \dfrac{V_1^2 h^2}{g} \\ y \to \infty \quad , \; f \to \infty \\ y \to -\infty \; , \; f \to -\infty \end{cases}$$

http://ingesolucionarios.blogspot.com
(cont.)

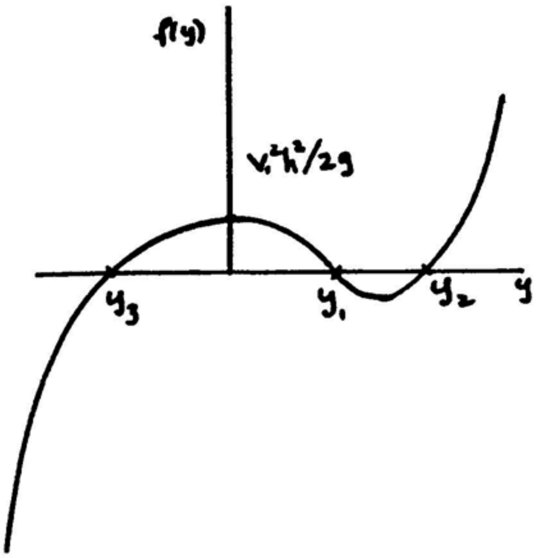


Also when $y<0$ , then for large $V_1$ , $f(y)$ continues to decrease as $|y|$ gets larger. Hence we have a negative root $y_3$ which is physically of no interest and two positive roots $y_2$ and $y_3$ which are meaningful.


http://ingesolucionarios.blogspot.com Edu_Zegarr_ch

 http://ingesolucionarios.blogspot.com

Water flows steadily up the vertical pipe and enters the annular region between the circular plates as shown. It then moves out radially, issuing out as a free sheet of water. If we neglect friction entirely, what is the flow of water through the pipe if the pressure at $A$ is 69 kPa gage?

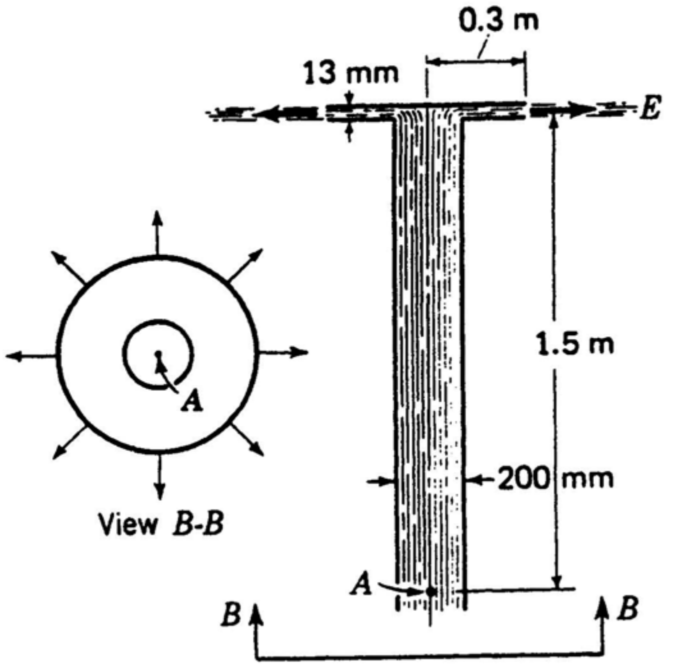


Using **Bernoulli** between $A$ and $E$ we have:

$$\left[\frac{p_{atm}+69{,}000}{\rho}\right] + \frac{V_A^2}{2} + 0 = \frac{p_{atm}}{\rho} + \frac{V_E^2}{2} + (1.5)(9.81) \qquad (1)$$

Now use **continuity** condition

$$V_A \frac{\pi(.200)^2}{4} = (2\pi)(.3)(.013)V_E$$

$$V_A = .780\,V_E \qquad (2)$$

Substitute for $V_A$ in Eq. (1).

$$\frac{69{,}000}{1{,}000} + \frac{(.780V_E)^2}{2} = \frac{V_E^2}{2} + (1.5)(9.81)$$

$$V_E = 16.65\ m/\text{sec}$$

$$\boxed{Q = (16.65)(2\pi)(.3)(.013) = .408\ m^3/s}$$


http://ingesolucionarios.blogspot.com Edu_Zegarr_ch

http://ingesolucionarios.blogspot.com

5.30

In Prob. .29, compute the upward force on the device from water and air. The volume flow is 0.408 $m^3/s$. Explain why you cannot profitably use Bernoulli's equation here for a force calculation.

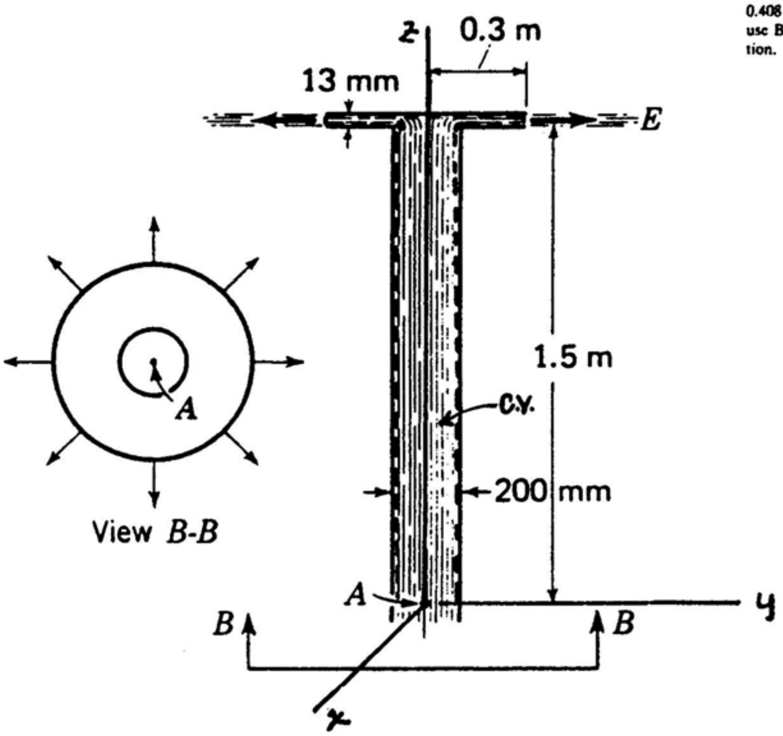


a) $$p_A\left[\frac{\pi(.200)^2}{4}\right] - \gamma\left[\frac{\pi(.200)^2}{4}\right](1.5) - \gamma\pi\left(\frac{.6^2}{4} - \frac{.2^2}{4}\right)(.013) + R_y = -\rho V_A^2\left[\frac{\pi(.200)^2}{4}\right]$$

Subst. values. Use gauge pressures.

$$(69{,}000)\left[\frac{\pi(.200)^2}{4}\right] - (9{,}806)\left(\frac{\pi}{4}\right)(.200)^2(1.5) - (9{,}806)\left(\frac{\pi}{4}\right)(.6^2 - .2^2)(.013) + R_y$$

$$= -1{,}000\left[\frac{.408}{\frac{\pi(.200)^2}{4}}\right]^2 \frac{\pi(.200)^2}{4}$$

$$R_y = -6972\ N$$

Taking the reaction gives us the total force on the device.

$$K_y = 6{,}972\ N$$

b) We cannot use Bernoulli to get the pressure distribution at the top plates where the thrust is developed because we don't know the velocity in this very complicated region of flow.


http://ingesolucionarios.blogspot.com Edu_Zegarr_ch

http://ingesolucionarios.blogspot.com

5.31

The velocity at point $A$ is 18 m/s. What is the pressure at point $B$ if we neglect friction?

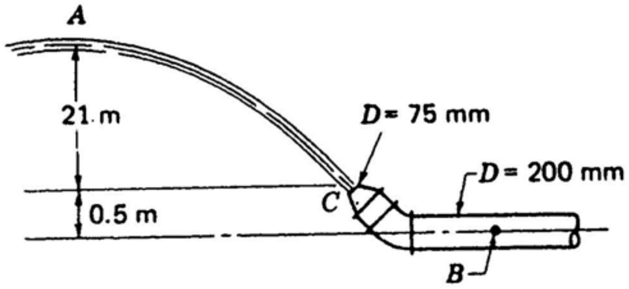


Use **Bernoulli** between $A$ and $B$.

$$\frac{p_B}{\rho} + \frac{V_B^2}{2} = \frac{18^2}{2} + \frac{p_{atm}}{\rho} + (9.81)(21.5)$$

$$\therefore \quad \frac{p_B}{\rho} - \frac{p_{atm}}{\rho} + \frac{V_B^2}{2} = 373 \qquad (1)$$

Now use **Bernoulli** between $C$ and $A$.

$$\frac{V_C^2}{2} + \frac{p_{atm}}{\rho} = \frac{18^2}{2} + \frac{p_{atm}}{\rho} + (21)(9.81)$$

$$\therefore \quad V_C = 27.1 \ m/\text{sec}$$

Next use **continuity** between $B$ and $C$.

$$V_C \frac{\pi(.075)^2}{4} = V_B \frac{\pi(.200)^2}{4}$$

$$V_B = 3.81 \ m/\text{sec}$$

Subst. into (1).

$$\left(\frac{p_B}{1{,}000} - \frac{p_{atm}}{1{,}000}\right) = \left[373 - \frac{3.81^2}{2}\right] = 366$$

The pressure at $B$ is then:

$$p_B = 366 \ kPa \ gauge$$

http://ingesolucionarios.blogspot.com Edu_Zegarr_ch

http://ingesolucionarios.blogspot.com

A diver is directing a flexible pipe into which is sucked sand and water so as to expose part of a sunken ship. If the pressure at the inlet *A* is close to the hydrostatic pressure of the surrounding water, what amount of sand will be sucked up per second by a 2-kW pump? The specific gravity of the sand and water mixture picked up is 1.8. The inside diameter of the pipe is 250 mm. Neglect friction losses in the pipe.

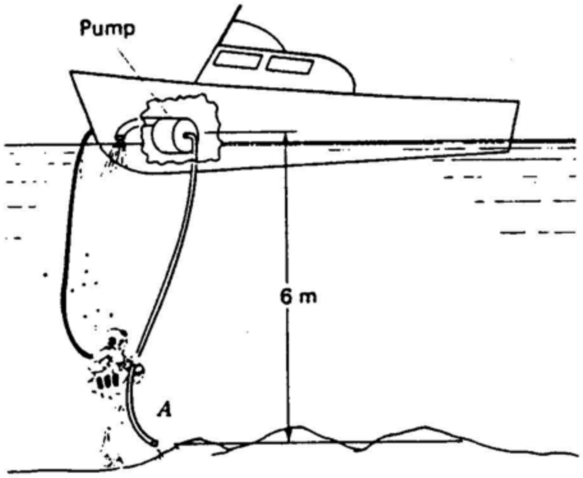


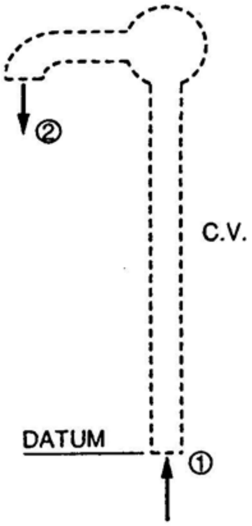


**First Law** for C.V. Use gauge pressures.

$$\left(\frac{V_1^2}{2} + gz_1 + u_1 + \frac{p_1}{\rho}\right) + \frac{dQ}{dm} - \frac{dW_s}{dm} = \left(\frac{V_2^2}{2} + gz_2 + u_2 + \frac{p_2}{\rho}\right)$$

$$\frac{(9{,}806)(6)}{(1{,}000)(1.8)} - \frac{dW_s}{dm} = (9.81)(6)$$

$$\frac{dW_s}{dm} = -26.17 \; N\text{-}m/kg$$

**NOTE**

$$\frac{dW_s}{dt} = \left(\frac{dW_s}{dm}\right)\left(\frac{dm}{dt}\right)$$

$$2{,}000 = (26.17)\,\frac{dm}{dt}$$

$$\frac{dm}{dt} = 76.4 \; kg/\text{sec} \quad (sand + water)$$

$$\left(\frac{dm}{dt}\right)_{sand} = \frac{.8}{1.8}\,(76.4) = 33.96 \; kg/\text{sec}$$

http://ingesolucionarios.blogspot.com

5.33

Air is made to flow through a well-insulated pipe by a pump. It is desired that 50.0 ft$^3$ of air per second flow by $A$. The inlet pressure $p_A$ is 10 lb/in$^2$ absolute and the temperature is 60°F. What power is required for the blower? Take $u$ equal to $c_v T$, where $c_v$ is the specific heat at constant volume and $T$ is the absolute temperature. Use the value 0.171 Btu/(lbm)(°R) for $c_v$. The exit temperature of the air is 90°F.

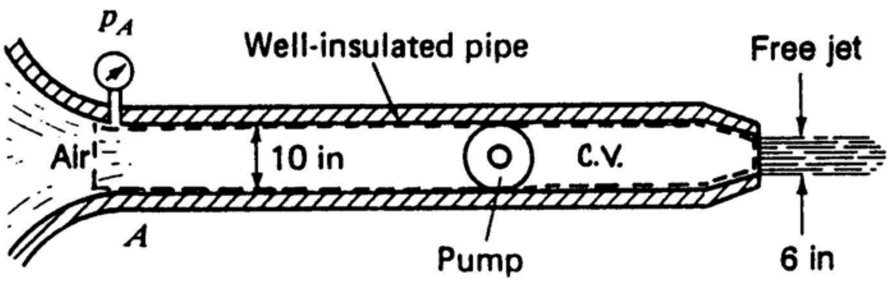


**First Law**

$$\left[\frac{V_1^2}{2} + gz_1 + u_1 + \frac{p_1}{\rho_1}\right] - \frac{dW_s}{dm} = \left[\frac{V_2^2}{2} + gz_2 + u_2 + \frac{p_2}{\rho_2}\right]$$

<u>At 1</u>

$$V_1 = \frac{Q}{A} = \frac{50.0}{\left(\frac{\pi}{4}\right)\left(\frac{10}{12}\right)^2} = 91.7\ ft/\text{sec}$$

$$u_1 = (.171)T\ BTU/lbm = (.171)(778)(460° + 60°)(32.2) = 2.228\times10^6\ ft-lb/slug$$

$$p_1 = \rho_1 R T_1$$

$$(10)(144) = (\rho_1)(53.3)(32.2)(520)$$

$$\rho_1 = 1.614\times10^{-3}\ slugs/ft^3$$

$$w = \rho_1 V_1 A = (1.614\times10^{-3})(91.7)\left(\frac{\pi}{4}\right)\left(\frac{10}{12}\right)^2 = .0807\ slug/\text{sec}$$

<u>At 2</u>

$$p_2 = 2{,}117 = (\rho_2)(53.3)(32.2)(550)$$



http://ingesolucionarios.blogspot.com
Edu_Zegarr_ch

http://ingesolucionarios.blogspot.com

(cont.)

$$\rho_2 = .00224 \; slugs/ft^3$$

$$w = \rho_2 V_2 A$$

$$.0807 = (.00224)(V_2)\left(\frac{\pi}{4}\right)\left(\frac{6}{12}\right)^2$$

$$V_2 = 183.3 \; ft/\text{sec}$$

$$u_2 = c_v T_2 = (.171)(778)(32.2)(550) = 2.356\times10^6$$

Subst. into first law.

$$\left[\frac{91.7^2}{2} + 2.228\times10^6 + \frac{1{,}440}{1.614\times10^{-3}}\right] - \frac{dW_s}{dm}$$

$$= \left[\frac{183.3^2}{2} + 2.356\times10^6 + \frac{2{,}117}{.00224}\right]$$

$$\therefore \quad \frac{dW_s}{dm} = -193{,}500 \; ft\text{-}lb/slug$$

$$\frac{dW}{dt} = \frac{dW_s}{dt}\frac{dm}{dt} = (193{,}500)(.0807) = 15{,}615 \; ft\text{-}lb/\text{sec} =$$ **28.4 HP**

http://ingesolucionarios.blogspot.com Edu_Zegarr_ch

A rocket-powered test sled slides over rails. This test sled is used for experimentation on the ability of human beings to undergo large persistent accelerations. To brake the sled from high speeds, small scoops are lowered to deflect water from a stationary tank of water placed near the end of the run. If the sled is moving at a speed of 100 km/h at the instant of interest, compute *h* of the deflected stream of water as seen from the sled. Assume no loss in speed of the water relative to the scoop.

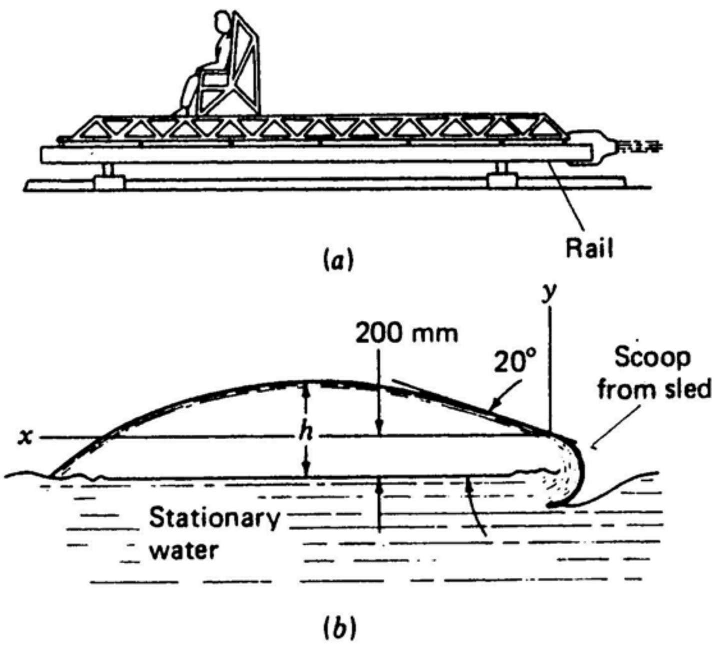


Use **Bernoulli** between scoop and highest point in trajectory. Take datum at scoop

$$\frac{V_1^2}{2} + 0 + 0 = \frac{(V_1 \cos 20°)^2}{2} + g(h - .200)$$

Now $$V_1 = (100)\left(\frac{1,000}{3,600}\right) = 27.8 \; m/\text{sec}$$

$$\therefore \quad \frac{27.8^2}{2} = \frac{682}{2} + 9.81(h - .200)$$

$$h = 4.80 \; m$$

http://ingesolucionarios.blogspot.com

A firefighter is directing water from a hose into the broken window of a burning house. The velocity of the water is 15 m/s as it leaves the hose. What are the angles $\alpha$ needed to do the job? *Hint:* In addition to Bernoulli's equation, you will have to consider components of Newton's law for a water particle. Toward the end of your calculations it will also help if you replace $1/(\cos^2\alpha)$ by $(1+\tan^2\alpha)$ which equals $\sec^2\alpha$.

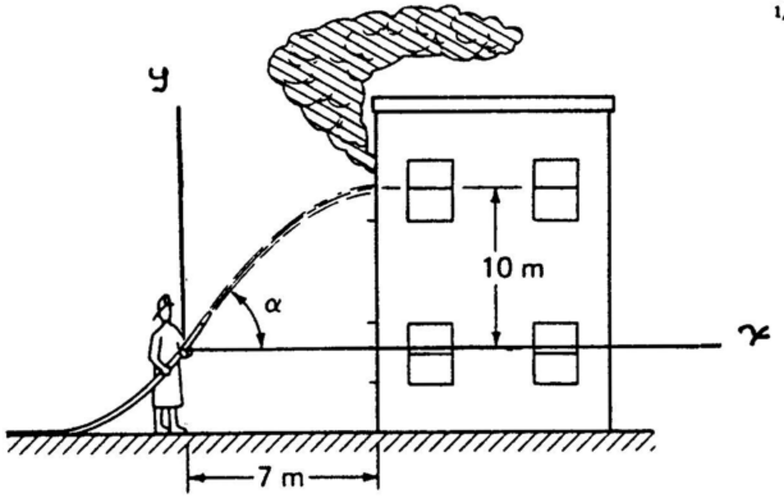


Use **Bernoulli** between the fireman and the window. Thus using gauge pressures and a datum at the fireman, we have:

$$\frac{V_1^2}{2} + 0 + 0 = \frac{V_2^2}{2} + gz$$

$$\therefore \quad 15^2 = V_2^2 + (2)(9.81)(10)$$

$$V_2 = 5.37 \ m/\mathrm{sec}$$

From **Newton's** law for a fluid element $\qquad \ddot{y} = -g \qquad \dot{y} = -gt + C_1 \quad (1)$

When $t=0$ , $\dot{y} = V_1 \sin\alpha \qquad \therefore \ C_1 = 15\sin\alpha$

From Eq. (2) $\qquad \dot{y} = -gt + 15\sin\alpha$

Also $\qquad \dot{x} = 15\cos\alpha \qquad x = 15(\cos\alpha)t + C_2$

When $t = 0$ , $x = 0 \qquad \therefore \ C_2 = 0$

Also find $t$ when $x = 7m$ .

$$y = 15(\cos\alpha)t \qquad \therefore \ t = \frac{7}{15\cos\alpha} \qquad (4)$$


http://ingesolucionarios.blogspot.com Edu_Zegarr_ch

http://ingesolucionarios.blogspot.com

5.36

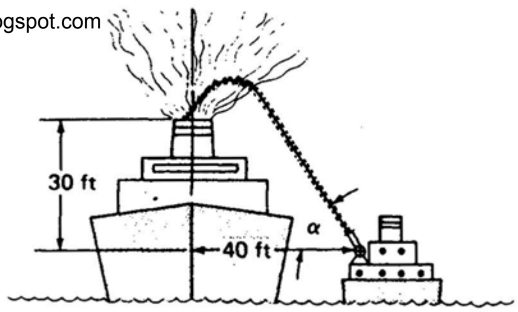


The engine room of a freighter is on fire. A fire-fighting tugboat has drawn alongside and is directing a stream of water to go into the stack of the freighter. If the exit speed of the jet of water is 70 ft/s, what angle α is needed to accomplish the task? *Hint:* Only one α will result in water getting into the stack. To decide the proper α of the two results, locate positions $x$ where $y_{max}$ occurs for the stream and decide which stream can enter stack.

We use **Bernoulli** between jet nozzle and at the stack. Using datum at nozzle and using gauge pressures, we have:

$$\frac{V_1^2}{2} + 0 + 0 = \frac{V_2^2}{2} + gz + 0$$

$$V_2^2 = 70^2 - (2)(32.2)(30)$$

$$V_2 = 54.5\ ft/sec \qquad (1)$$

Next use components of **Newton's** law.

$$\ddot{y} = -32.2 \qquad \dot{y} = -32.2t + C_1$$

When $t = 0$ , $\dot{y} = 70 \sin\alpha$

$$\therefore\ \dot{y} = -32.2t + 70\sin\alpha \qquad (2)$$

Also $\ddot{x} = 0$ $\qquad \dot{x} = 70\cos\alpha \qquad x = 70(\cos\alpha)t + C_2$

When $t = 0$ , $x = 0$ $\qquad \therefore\ C_2 = 0$ .

From the Pythagorean theorem, at stack we can say:

$$(\dot{x})^2 + (\dot{y})^2 = 54.5^2$$

$$\therefore\ (70\cos\alpha)^2 + (-32.2t + 70\sin\alpha)^2 = 54.5^2 \qquad (5)$$

Find $t$ for water at stack. Use Eq. (4). When $x = 40$ , find $t$ .

$$40 = 70(\cos\alpha)t$$

$$\therefore\ t = \frac{4}{7\cos\alpha} \qquad (6)$$



http://ingesolucionarios.blogspot.com Edu_Zegarr_ch

http://ingesolucionarios.blogspot.com

**(cont.)**

Substitute into (2). $\dot{y} = -g\left(\dfrac{7}{15\cos\alpha}\right) + 15\sin\alpha$ (5)

We can then say at the window $\dot{x}^2 + \dot{y}^2 = V_2^2 = 5.37^2$

$$225\cos^2\alpha + \left[15\sin\alpha - \frac{7g}{15\cos\alpha}\right]^2 = 5.37^2$$

$$225\cos^2\alpha + 225\sin^2\alpha - \frac{(2)(15)(7g)}{15}\frac{\sin\alpha}{\cos\alpha} + \left(\frac{7g}{15}\right)^2\frac{1}{\cos^2\alpha} = 5.37^2$$

$$225 - 28.8 = 137.3\frac{\sin\alpha}{\cos\alpha} - 20.9\frac{1}{\cos^2\alpha}$$

Replace $\dfrac{1}{\cos^2\alpha}$ by $\sec^2\alpha = 1 + \tan^2\alpha$

$$20.9(1+\tan^2\alpha) - 137.3\tan\alpha + 196.2 = 0$$

$$\tan^2\alpha - 6.57\tan\alpha + 10.39 = 0$$

$$\tan\alpha = \frac{6.57 \pm\sqrt{6.57^2-(4)(10.39)}}{2} = 2.65 \quad ; \quad 3.92$$

$$\therefore \quad \alpha_1 = 69.3° \qquad \alpha_2 = 75.7°$$



http://ingesolucionarios.blogspot.com Edu_Zegarr_ch

http://ingesolucionarios.blogspot.com
**(cont.)**

Subst. into (5).
$$70^2\cos^2\alpha + \left[70\sin\alpha - \frac{(32.2)(4)}{7\cos\alpha}\right]^2 = 54.5^2$$

$$70^2(\cos^2\alpha + \sin^2\alpha) - \frac{(2)(70)(32.2)(4)\sin\alpha}{7\cos\alpha} + \frac{(32.2)^2(4)^2}{7^2\cos^2\alpha} = 54.5^2$$

$$70^2 - 54.5^2 - 2{,}576\tan\alpha + 338.6\,\frac{1}{\cos^2\alpha} = 0$$

Replace $\frac{1}{\cos^2\alpha}$ by $1 + \tan^2\alpha$ .

$$1{,}930 - 2{,}576\tan\alpha + 338.6(1+\tan^2\alpha) = 0$$

$$\tan^2\alpha - 7.61\tan\alpha + 6.70 = 0$$

$$\therefore\ \tan\alpha = \frac{7.61 \pm \sqrt{7.61^2 - (4)(6.70)}}{2}$$

$$\alpha_1 = 81.4° \qquad \alpha_2 = 45.5°$$

Which $\alpha$ does the job? Find $t$ for $\dot{y} = 0$ . Go to Eq. (2).

$$0 = -32.2t + 70\sin\alpha$$

For $\alpha_1$ we get 2.149 sec.
$\alpha_2$ we get 1.5505 sec.

Find $x$ for $y_{max}$ . Go to Eq. (4).

For $\alpha_1$ $x = 70(\cos 81.4)(t) = 22.7\ ft$

For $\alpha_2$ $x = 70(\cos 45.5)(1.5505) = 76.1\ ft$

Clearly only $\alpha_1$ will do, since for $\alpha_2$ , $y_{max}$ occurs to left of stack which means that the fluid is still rising at the stack and will merely hit it rather than going in.

Thus

$$\boxed{\alpha = 81.4°}$$


http://ingesolucionarios.blogspot.com Edu_Zegarr_ch

http://ingesolucionarios.blogspot.com

5.37

$$\begin{cases} p_1 = 300\ psi \\ p_2 = 5\ psi \\ h_1 = 1{,}187\ BTU/lbm \\ h_2 = 1{,}041\ BTU/lbm \\ u_2 = 800\ BTU/lbm \\ A_1 = 3\ in.^2 \\ A_2 = 2\ in.^2 \end{cases}$$

A fluid expands through a nozzle from a pressure of 300 lb/in² absolute to a pressure of 5 lb/in² absolute. The initial and final enthalpies of the fluid are 1187 Btu/lbm and 1041 Btu/lbm, respectively. Calculate the final velocity by neglecting the inlet velocity (called the approach velocity), gravitational effects, and heat transfer out of the casing and along the fluid flow. If the internal energy $u$ of the fluid is known at the exit conditions to be 800 Btu/lbm and the inlet and outlet areas are 3 in² and 2 in², respectively, compute the thrust of the nozzle.

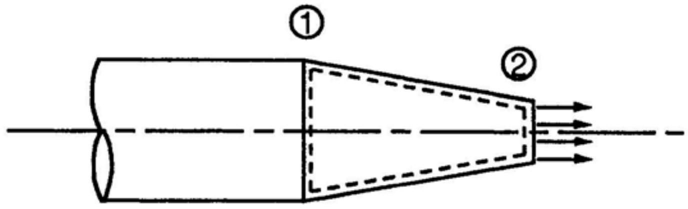


**First Law**

$$\frac{V_1^2}{2} + gz_1 + \frac{dQ}{dm} + h_1 = \frac{V_2^2}{2} + gz_2 + h_2$$

$$(1{,}187)(778)(g) = \frac{V_2^2}{2} + (1{,}041)(778)(g) \qquad V_2 = 2{,}705\ ft/s$$

**Look at $h_2$**

$$h_2 = \frac{p}{\rho_2} + u$$

$$(1{,}041)(778) = \frac{(5)(144)}{\rho_2} + (800)(778) \qquad \rho_2 = .003840\ lbm/ft^3$$

**Momentum**

$$(300)(3) - (5)(2) + T = V_2(\rho_2 V_2 A_2) + 0$$

$$T = -890 + \frac{(.003840)}{32.2}(2{,}705)^2\left(\frac{2}{144}\right) = -877.9\ lb$$

$\therefore$ $K_x = 878\ \ lb$

http://ingesolucionarios.blogspot.com

Neglecting friction in the pipe shown in Fig. P6.39, compute the power developed on the turbine from the water coming from a large reservoir.

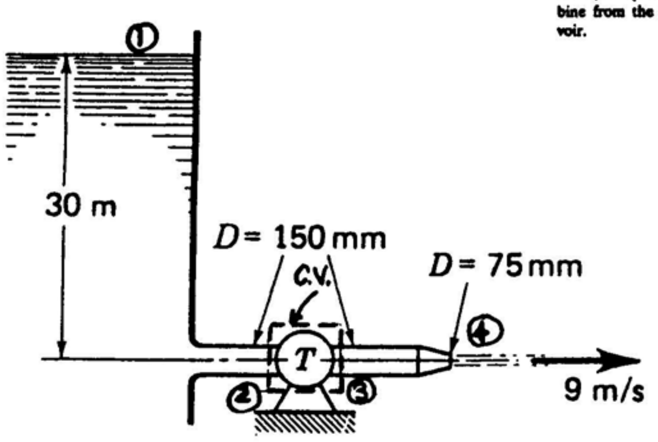


Use the first **law of thermodynamics** for the C.V. shown. For steady incompressible flow with negligible heat transfer and 1-D flow at entrance and exit we have:

$$-\frac{dW_s}{dt} = -\left(\frac{V_2^2}{2} + \frac{p_2}{\rho} + u_2\right)\rho V_2 A_2 + \left(\frac{V_3^2}{2} + \frac{p_3}{\rho} + u_3\right)\rho V_3 A_3$$

Clearly, **by continuity**: $\rho V_2 A_2 = \rho V_3 A_3$

and also $V_2 = V_3$

Finally noting that we can take $u_2 = u_3$ we have:

$$-\frac{dW_s}{dt} = \frac{p_3 - p_2}{\rho}\,\rho V_2 A_2 \qquad (1)$$

Again, the **continuity** considerations between 3 and 4 we see that:

$$V_2 = V_3 = \frac{.075^2}{.150^2}(9) = 2.25 \; m/\text{sec}$$

Going back to (1) we have:

$$-\frac{dW_s}{dt} = (p_3 - p_2)(2.25)(\pi)\,\frac{(.150)^2}{4}$$

$$\therefore \; -\frac{dW_s}{dt} = (p_3 - p_2)(.0398) \qquad (2)$$

To get $p_3$ use **Bernoulli** between (3) and (4). Thus:

http://ingesolucionarios.blogspot.com
(cont.)

$$\frac{2.25^2}{2} + \frac{p_3}{\rho} = \frac{9^2}{2} + \frac{101{,}325}{\rho}$$

$$p_3 = 101{,}325 + \frac{1{,}000}{2}(9^2 - 2.25^2) = 139{,}293\ Pa$$

To get $p_2$ use Bernoulli between (1) and (2).

$$0 + (30)(9.81) + \frac{P_{atm}}{\rho} = \frac{2.25^2}{2} + \frac{P_2}{\rho}$$

$$p_2 = 101{,}325 + \left[(30)(9.81) - \frac{2.25^2}{2}\right](1{,}000) = 393{,}094\ Pa$$

Go back to Eq. (2).

$$-\frac{dW_s}{dt} = (139{,}293 - 393{,}094)(.0398) = -10{,}101\ N\text{-}m/\text{sec}$$

Hence power developed by turbine is 10.101 kW .


http://ingesolucionarios.blogspot.com Edu_Zegarr_ch

5.39 http://ingesolucionarios.blogspot.com

Water enters a pipe from a large reservoir and on issuing out of the pipe strikes a 90° deflector plate as shown. If a horizontal thrust of 200 lb is developed on the deflector, what is the horsepower developed by the turbine?

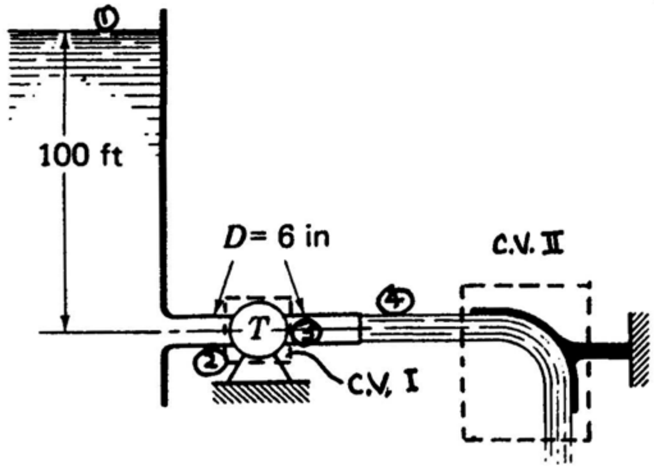


We employ the **first law of thermodynamics** for steady incompressible flow with zero heat transfer. For 1-D flow at entrance and exit we have for control volume I:

$$-\frac{dW_s}{dt} = -\left(\frac{V_2^2}{2} + \frac{p_2}{\rho} + u_2\right)\rho V_2 A_2 + \left(\frac{V_3^2}{2} + \frac{p_{atm}}{\rho} + u_3\right)\rho V_3 A_3$$

For **continuity** we have

$$V_2 = V_3$$

And since $A_2 = A_3$ , and $u_2 = u_3$ we get:

$$-\frac{dW_s}{dt} = \frac{p_{atm}-p_2}{\rho}(\rho V_2 A_2) \qquad (1)$$

We next use **Bernoulli** between (1) and (2). Thus neglecting the approach velocity term:

$$\frac{p_{atm}}{\rho} + 3{,}220 = \frac{p_2}{\rho} + \frac{V_2^2}{2}$$

$$\therefore \quad \frac{p_2}{\rho} - \frac{p_{atm}}{\rho} = 3{,}220 - \frac{V_2^2}{2} \qquad (2)$$

Substituting into Eq. (1) we get:


http://ingesolucionarios.blogspot.com Edu_Zegarr_ch

http://ingesolucionarios.blogspot.com
(cont.)

$$-\frac{dW_s}{dt} = -\left(3{,}220 - \frac{V_2^2}{2}\right)(\rho V_2 A_2) \tag{3}$$

To get $V_2$ we use the **momentum** equation for control volume (II). Thus in the $x$ direction for steady flow etc. we have:

$$R_x = -\rho V_3^2 A_3$$

$$-200 = -1.94 V_3^2 \, \frac{\pi\left(\frac{1}{2}\right)^2}{4}$$

$$V_3 = V_2 = \sqrt{526} = 22.9 \; ft/\text{sec}$$

Now going back to Eq. (3) we get:

$$-\frac{dW_s}{dt} = -(3{,}220-263)(1.94)(22.9)\left(\frac{\pi}{16}\right) = -25{,}800 \; ft\text{-}lb/\text{sec}$$

The output of the turbine is:

$$\boxed{Power = 46.9 \; H.P.}$$


http://ingesolucionarios.blogspot.com Edu_Zegarr_ch

http://ingesolucionarios.blogspot.com

**Water in a large tank is under a pressure of 35 kPa gage at the free surface. It is pumped through a pipe as shown and issues out of a nozzle to form a free jet. For the data given, what is the power required by the pump?**

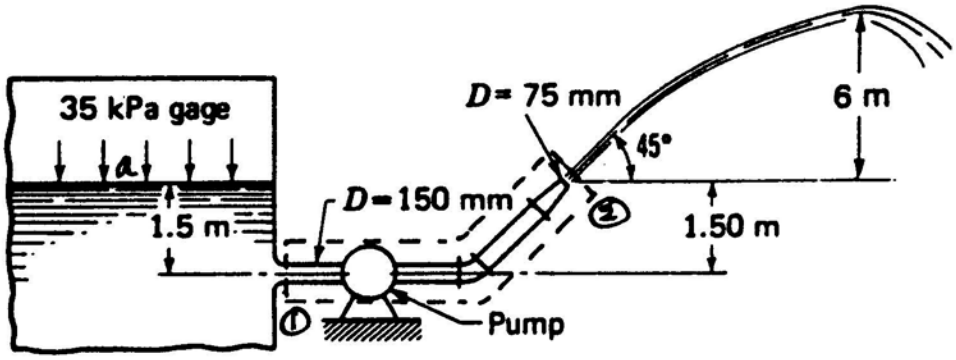


We start with the **first law of thermodynamics** for the control volume shown. For steady, incompressible isothermal flow we have, incorporating the continuity condition and using gauge pressures:

$$-\frac{dW_s}{dt} = \left[-\left(\frac{V_1^2}{2} + \frac{p_1}{\rho}\right) + \left(\frac{V_2^2}{2} + 1.5g\right)\right]\rho V_2 A_2$$

Noting that $V_1 = \frac{1}{4}V_2$ we have:

$$-\frac{dW_s}{dt} = \left[-\frac{V_2^2}{32} - \frac{p_1}{\rho} + \frac{V_2^2}{2} + 1.5g\right]\rho V_2 A_2$$

$$-\frac{dW_s}{dt} = \left[\frac{15}{32}V_2^2 + 14.72 - \frac{p_1}{\rho}\right](1{,}000)(V_2)(\pi)\ \frac{(.075)^2}{4} \qquad (1)$$

$$-\frac{dW_s}{dt} = \left[\frac{15}{32}V_2^2 + 14.72 - \frac{p_1}{\rho}\right](4.42)(V_2)$$

Now use **Bernoulli** between (a) and (1).

http://ingesolucionarios.blogspot.com

**(cont.)**

$$\frac{35{,}000}{1{,}000} + (1.5)(9.81) = \frac{p_1}{1{,}000} + \frac{V_1^2}{2}$$

$$\frac{p_1}{1{,}000} = 49.7 - \frac{V_2^2}{32} \qquad (2)$$

Substituting back into Eq.(1) we get:

$$-\frac{dW_s}{dt} = \left[\frac{15}{32}V_2^2 + 14.72 - 49.7 + \frac{V_2^2}{32}\right](4.42)(V_2) = \left[\frac{V_2^2}{2} - 35\right](4.42)(V_2) \qquad (3)$$

Now use **Bernoulli** between (2) and (3). If we neglect air friction there is no change in the horizontal speed of the water from (2) to (3). Then we have:

$$\frac{V_2^2}{2} + (1.5)(g) = \frac{(V_2 \cos 45°)^2}{2} + (7.5)(g)$$

$$V_2 = \sqrt{(4)(6g)} = 15.34 \ m/\text{sec} \qquad (4)$$

Going back to Eq. (3) we have:

$$-\frac{dW_s}{dt} = \left[\frac{15.34^2}{2} - 35\right](4.42)(15.34)$$

$$\boxed{\frac{dW_s}{dt} = -5600 \ N\text{-}m/\text{sec} = -5.600 \ kW}$$



http://ingesolucionarios.blogspot.com
Edu_Zegarr_ch

http://ingesolucionarios.blogspot.com
5.41

A pump draws water out of a reservoir as shown. The pump develops 10 hp on the flow. What is the horizontal force at support D required as a result of the fluid flow?

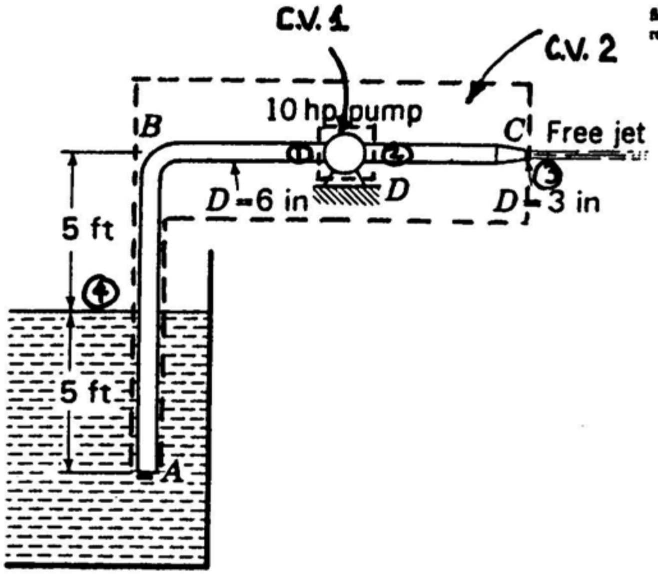


We will need the velocity of the fluid in the pipe and so we use the **first law of thermodynamics** for the control volume around the pump. For steady, compressible, flow we have:

$$-\frac{dW_s}{dt} = \left[-\left(\frac{V_1^2}{2} + \frac{p_1}{\rho}\right) + \left(\frac{V_2^2}{2} + \frac{p_2}{\rho}\right)\right]\rho V_1 A_1$$

$$\therefore \quad 5{,}500 = \left(\frac{p_2 - p_1}{\rho}\right)(\rho V_1 A_1) \tag{1}$$

Now use **Bernoulli** between (2) and (3). Using gauge pressures we have

$$\frac{V_2^2}{2} + \frac{p_2}{\rho} = \frac{V_3^2}{2}$$

But $V_3 = 4V_2$

$$\therefore \quad \frac{p_2}{\rho} = \left(\frac{15}{2}\right)V_2^2 \tag{2}$$

Also use **Bernoulli** between (1) and (4). Using gauge pressures we have for a datum at the free surface


http://ingesolucionarios.blogspot.com
Edu_Zegarr_ch

http://ingesolucionarios.blogspot.com
**(cont.)**

$$0 = \frac{V_1^2}{2} + \frac{p_1}{\rho} + (5)(32.2)$$

$$\therefore \quad \frac{p_1}{\rho} = -\frac{V_1^2}{2} - 161 \qquad (3)$$

Now substituting (2) and (3) into Eq. (1). We get noting $V_1 = V_2$ :

$$5{,}500 = \left(\frac{15}{2} V_2^2 + \frac{V_2^2}{2} + 161\right)\rho V_2 A_1$$

$$8V_2^3 + 161V_2 - 14{,}440 = 0$$

$$V_2^3 + 20.1V_2 - 1{,}805 = 0$$

Solving by trial and error we get

$$V_2 = 11.63 \ ft/\text{sec}$$

Now use the **momentum** equation in the $x$ direction for the control volume (2). Thus for steady flow with 1-D flow at the entrance and exit we have:

$$R_x = \rho_3 V_3^2 A_3 = (1.94)[(16)(11.63)^2]\left(\frac{\pi}{64}\right)$$

$$R_x = 206 \ lbs$$

Taking the reaction

$$\boxed{K_x = -206 \ lb}$$


http://ingesolucionarios.blogspot.com Edu_Zegarr_ch

 http://ingesolucionarios.blogspot.com

If the pump develops 3.75 kW on the flow, what is the flow rate? *Hint:* What is the velocity of flow at the right opening of the U tube?

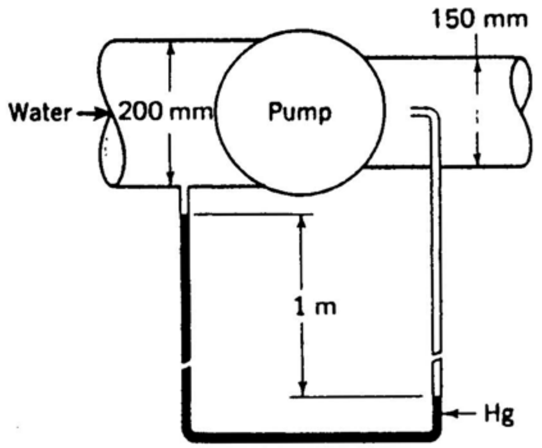


Assuming 1-D flow at entrance and exit, we have for the **first law of thermodynamics** and **continuity**:

$$-\frac{dW_s}{dt} = \left[-\left(\frac{V_1^2}{2} + \frac{p_1}{\rho}\right) + \left(\frac{V_2^2}{2} + \frac{p_2}{\rho}\right)\right]\rho_2 V_2 A_2$$

$$3{,}750 = \left[\frac{p_2-p_1}{\rho} - \left(\frac{150}{200}\right)^4 \frac{V_2^2}{2} + \frac{V_2^2}{2}\right]\rho V_2 A_2$$

$$3{,}750 = \left[\frac{p_2-p_1}{\rho} + .3418V_2^2\right](1{,}000)(V_2)\left(\frac{\pi(.150)^2}{4}\right)$$

Hence

$$212 = \left[\frac{p_2-p_1}{\rho} + .3418V_2^2\right]V_2 \qquad (1)$$

Use **manometry**. This gives us the pressure change between section (1) and the pressure at "a" where the velocity is zero.

$$p_2-p_1 = (1)(\gamma_{Hg}-\gamma_{H_2O}) = (1)(9{,}806)(13.6-1) = 123.6\ kPa\,g \qquad (2)$$

Now use **Bernoulli** between (a) and (2) downstream of the pump.

http://ingesolucionarios.blogspot.com
(cont.)

$$\frac{V_2^2}{2} + \frac{p_2}{\rho} = 0 + \frac{p_a}{\rho}$$

$$\therefore \quad \frac{p_a}{\rho} = \frac{V_2^2}{2} + \frac{p_2}{\rho} \qquad (3)$$

Substituting into Eq. (2) we get

$$\frac{V_2^2}{2} + \frac{p_2 - p_1}{\rho} = \frac{123{,}600}{1{,}000} = 123.6$$

$$\therefore \quad \frac{p_2 - p_1}{\rho} = 123.6 - \frac{V_2^2}{2} \qquad (4)$$

Substituting for $\frac{p_a - p_1}{\rho}$ from Eq. (4) into (1) we get

$$212 = [123.6 - .1582 V_2^2] V_2$$

$$V_2^3 (.1582) - 123.6 V_2 + 212 = 0$$

$$V_2^3 - 781 V_2 + 1{,}340 = 0$$

Solve by trial and error

$$\boxed{V_2 = 27.1 \ m/\text{sec}}$$

$$Q = (27.1)\left(\frac{\pi}{4}\right)(.150)^2 = \boxed{.479 \ m^3/s}$$


http://ingesolucionarios.blogspot.com Edu_Zegarr_ch

http://ingesolucionarios.blogspot.com

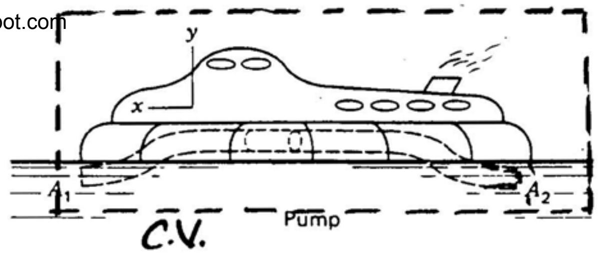


A ground effects ship is moving on the water at a speed of 100 km/h. Each of the two propulsion systems is composed of an intake of area $A_1$. The water is scooped in and a pump driven by a gas turbine drives the water at high speed out through area $A_2$. If the total drag of the ship is 25 kN, and if there are two drive systems described above, what is the area $A_1$ for each inlet?

$V = 100\ km/hr$

$Drag = 25\ kN$

*2 drive system*

$Power = 400\ kW\ per\ pump$

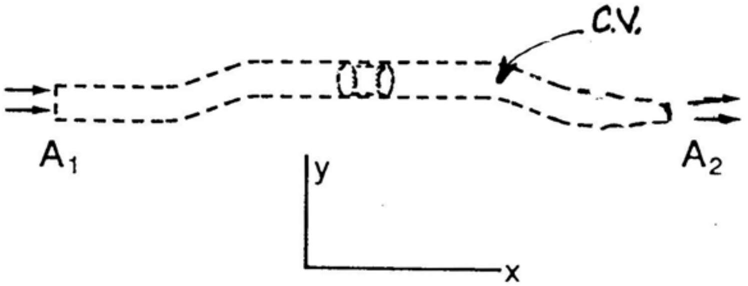


**Momentum Eq.** in $x$ direction:

$$25{,}000 = (-\rho_1 V_1^2 A_1 + \rho_2 V_2^2 A_2)(2)$$

continuity used here

$$\therefore \quad 12{,}500 = -(1{,}000)\left[(100)\left(\frac{1{,}000}{3{,}600}\right)\right]^2 A_1 + (1{,}000)\left[(100)\left(\frac{1{,}000}{3{,}600}\right)\right]A_1 V_2$$

$$\therefore \quad 12{,}500 = -7.716\times10^5 A_1 + 2.778\times10^4 A_1 V_2 \qquad (1)$$

**First Law of Thermodynamics:**

| **Assumptions** |
|---|
| 1. 1-D flow. |
| 2. Steady incompressible. |
| 3. u = const. |

$$\frac{V_1^2}{2} + gz_1 + u_1 + \frac{p_1}{\rho} = \frac{V_2^2}{2} + gz_2 + u_2 + \frac{p_2}{\rho} + \frac{dW_s}{dm}$$

$$\frac{\left[(100)\left(\frac{1{,}000}{3{,}600}\right)\right]^2}{2} = \frac{V_2^2}{2} - \frac{400\times10^3}{(1{,}000)\left(100\ \frac{1}{3.6}\right)(A_1)}$$

(cont.)

$$385.8 = \frac{V_2^2}{2} - \frac{14.40}{A_1} \quad (2)$$

From (1):

$$A_1 = 12{,}500\left[-7.716\times10^5 + 2.778\times10^4 V_2\right]^{-1}$$

Hence from (2):

$$385.8 = \frac{V_2}{2} - 1.152\times10^{-3}\left[-7.716\times10^5 + 2.778\times10^4 V_2\right]$$

$$V^2 - 64.01V_2 + 1{,}006 = 0$$

$$V_2 = \frac{64.01 \pm \sqrt{(64.01)^2 - (4)(1{,}006)}}{2} = 36.27\ m/s$$

$$V_2 = 36.27\ m/s$$

$$A_1 = 12{,}500\left[-7.716\times10^5 + (2.778\times10^4)(36.27)\right]^{-1}$$

$$A_1 = .05297\ m^2$$

http://ingesolucionarios.blogspot.com
5.44

What horsepower is needed to cause 30 ft³/s of water flow Neglect friction in pipes.
The exit diameter of the nozzle is 10 in.

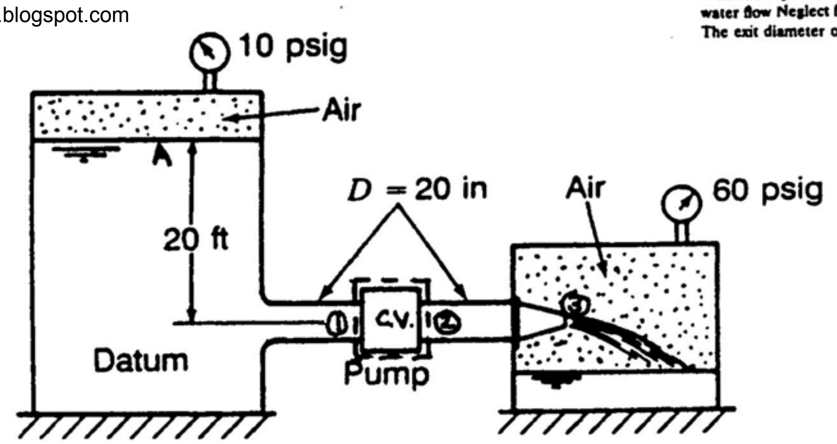


**Assumptions**

1. Incompressible flow.
2. Steady flow.
3. 1-D flow in pipes.
4. *u = const.*
5. $dQ/dt = 0$
6. Neglect KE at free surface.

**First Law for C.V.** (use gauge pressures):

$$\frac{V_1^2}{2} + gz_1 + \frac{p_1}{\rho} = \frac{V_2^2}{2} + gz_2 + \frac{p_2}{\rho} + \frac{dW_s}{dm} \tag{1}$$

**Bernoulli between** A and (1) and between (2) and (3).

**For** $A \to 1$

$$\frac{V_A^2}{2} + 20g + \frac{(10)(144)}{\rho} = \frac{V_1^2}{2} + 0 + \frac{p_1}{\rho} \tag{2}$$

**For** (2) → (3)

$$\frac{V_2^2}{2} + 0 + \frac{p_2}{\rho} = \frac{V_3^2}{2} + 0 + \frac{p_3}{\rho} \tag{3}$$

$$\therefore \quad \frac{V_2^2}{2} + 0 + \frac{p_2}{\rho} = \frac{V_3^2}{2} + 0 + \frac{(60)(144)}{\rho} \tag{4}$$



http://ingesolucionarios.blogspot.com
Edu_Zegarr_ch

http://ingesolucionarios.blogspot.com
**(cont.)**

**Continuity:**

$$V_1\left(\frac{\pi}{4}\right)\left(\frac{20}{12}\right)^2 = V_3\left(\frac{\pi}{4}\right)\left(\frac{10}{12}\right)^2 \qquad V_3 = 4V_1$$

$$V_2 = V_1 = \frac{30}{\left(\frac{\pi}{4}\right)\left(\frac{20}{12}\right)^2} = 13.75\ ft/\text{sec} \qquad V_3 = 55\ ft/\text{sec}$$

From (4):

$$\frac{p_2}{\rho} = \frac{55^2}{2} + \frac{(60)(144)}{1.938} - \frac{13.75^2}{2} = 5{,}876\ \frac{ft\text{-}lb}{slug}$$

$$\therefore\quad p_2 = 1.139\times10^4 \quad psf\ gauge$$

From (2):

$$p_1 = (1.938)\left[20g + \frac{1{,}440}{1.938} - \frac{13.75^2}{2}\right] = 2{,}505 \quad psf\ g$$

From (1):

$$\frac{2{,}505}{1.938} = \frac{1.139\times10^4}{1.938} + \frac{dW_s}{dm}$$

$$\frac{dW_s}{dm} = -4{,}585\ \frac{ft\text{-}lb}{slug}$$

$$\frac{dW_s}{dt} = \left(\frac{dW_s}{dm}\right)\left(\frac{dm}{dt}\right) = (-4{,}585)(30)(1.938)$$

$$\frac{dW_s}{dt} = -2.666\times10^5\ \frac{ft\text{-}lb}{\text{sec}} = \boxed{484.6\ HP}$$

http://ingesolucionarios.blogspot.com Edu_Zegarr_ch 

http://ingesolucionarios.blogspot.com

5.45

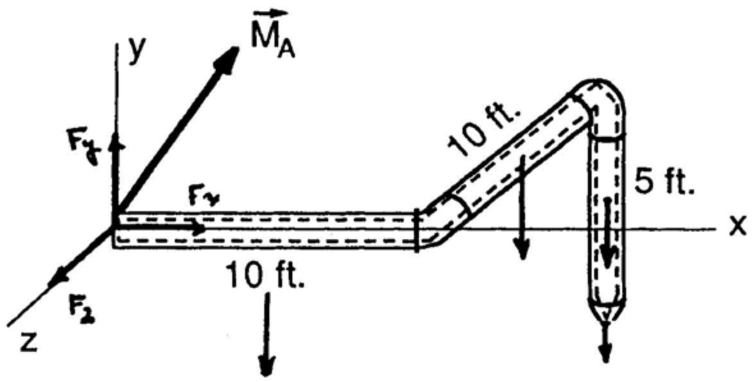


The internal diameter of the pipe system is 6 in. The exit nozzle diameter is 3 in.

(*a*) What is the velocity $V_e$ of flow leaving the nozzle? (Do *not* consider the flow inside the pipe proper to be inviscid.)

(*b*) What is the moment about *A* coming from the water alone onto the pipe? *BC* is parallel to the *z* direction. (Set up moment-of-momentum equation only.) The free surface may be considered at constant height.

a) Use **Bernoulli** between free surface and A

$$50g + \frac{(14.7)(144)}{1.938} = \frac{4{,}500}{1.938} + \frac{V_A^2}{2}$$

$$V_A = 27.6 \ ft/\text{sec}$$

**Continuity** for C.V. of inside of pipe.

$$\rho V_A\left(\frac{\pi 6^2}{4}\right) = \rho V_e\left(\frac{\pi 3^2}{4}\right)$$

$$V_e = (27.6)\left(\frac{6^2}{3^2}\right) = 110.4 \text{ sec}$$

b) **Moment of Momentum** about A .

$$\oiint \vec{r}\times\vec{T}\,dA + \iiint \vec{r}\times\vec{B}\rho\, dv = \oiint \vec{r}\times\vec{V}(\rho\vec{V}\cdot d\vec{A})$$

$$(10\hat{i} - 10\hat{k} - 5\hat{j})\times(p_{atm})(144)(A_e)\hat{j} + 5\hat{i}\times(62.4)\left(\frac{\pi\left(\frac{1}{2}\right)^2}{4}(10)\right)(-\hat{j})$$

$$+ (10\hat{i} - 5\hat{k})\times(62.4)\left(\frac{\pi\left(\frac{1}{2}\right)^2}{4}\right)(10)(-\hat{j}) + (10\hat{i} - 10\hat{k} - 2.5\hat{j})\times(62.4)\left(\frac{\pi\left(\frac{1}{2}\right)^2}{4}\right)(5)(-\hat{j}) + \vec{M}_A$$

$$= [(10\hat{i} - 10\hat{k} - 5\hat{j})\times(110.4)(-\hat{j})](110.4)\left(\frac{\pi\left(\frac{1}{4}\right)^2}{4}\right)(1.938)$$



http://ingesolucionarios.blogspot.com Edu_Zegarr_ch

http://ingesolucionarios.blogspot.com

Neglecting friction, what is the power developed by the turbine. At $B$ we have a free jet. The mass flow is 500 kg/s.

5.46 **Bernoulli** between (1) and (2). Use gauge pressures:

$$\frac{V_1^2}{2} + (50)(g) + 0 = \frac{V_2^2}{2} + 0 + \frac{p_2}{1,000} \qquad (1)$$

**Bernoulli** between (3) and (4):

$$\frac{V_3^2}{2} + 0 + \frac{p_3}{1,000} = \frac{V_4^2}{2} + \frac{p_4}{1,000} \qquad (2)$$

**Hydrostatics** around free jet:

$$p_4 = (9,806)(20)$$

From (2):

$$p_3 = (9,806)(20) \qquad (3)$$

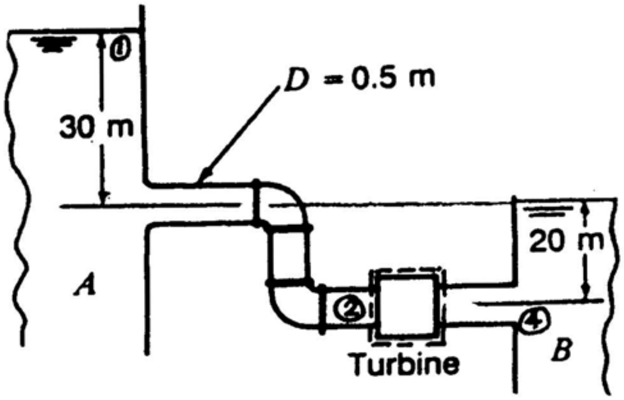


**Assumptions**

1. Steady isothermal flow.
2. Incompressible flow.
3. Neglect $dQ/dm$ .

∴ **Simplified First Law**

$$\frac{V_2^2}{2} + 0 + \frac{p_2}{\rho} = \frac{V_3^2}{2} + 0 + \frac{(9,806)(20)}{1,000} + \frac{dW_s}{dm}$$

Replace $\frac{p_2}{\rho}$ from (1) assuming negligible KE at free surface.

From (2): $\frac{p_2}{\rho} = 50g - \frac{V_2^2}{2}$ $\quad \therefore \quad \left(50g - \frac{V_2^2}{2}\right) = \frac{(9,806)(20)}{1,000} + \frac{dW_s}{dm}$

For $V_2$ we have: $V_2 = \dfrac{500}{\frac{(1,000)(\pi)(.5^2)}{4}} = 2.546 \ m/s$ $\quad \therefore \quad \frac{dW_s}{dm} = 291.8 \ \frac{N-m}{kg}$

$$\frac{dW_s}{dt} = \left(\frac{dW_s}{dm}\right)\left(\frac{dm}{dt}\right) = (291.8)(500) = \boxed{145.9 \ kW}$$



http://ingesolucionarios.blogspot.com Edu_Zegarr_ch

http://ingesolucionarios.blogspot.com

A fountain consists of a tank $G$ containing a water pump feeding four pipes out of which come water streams. The top of the tank is open. At $H$, we inject enough water to replace the water taken in by the pump from the tank $G$ to keep the level in the tank the same as outside the tank. If the inside diameter of the four pipes is 75 mm, what total vertical force is developed on the tank supports stemming from the flow of water?

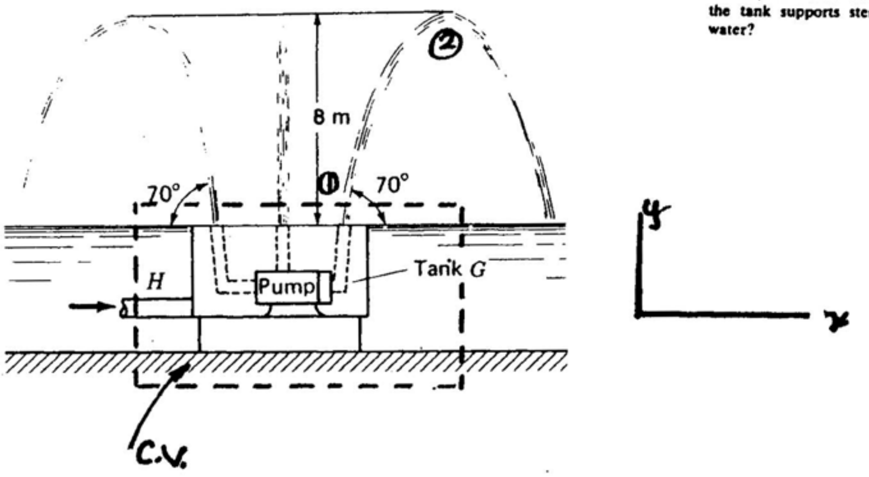


We choose the tank as the control volume.

We use **Bernoulli** between (1) and (2) using indicated datum. Using gauge pressures we have:

$$\frac{V_1^2}{2} + 0 + 0 = \frac{(V_1 \cos 70)^2}{2} + (g)(8) + 0$$

$$V_1^2(1-\cos^2 70°) = 2(9.81)(8)$$

$$V_1 = 13.33 \; m/\text{sec}$$

Now use **linear momentum** in the vertical direction.

$$R_y = \oint\!\!\!\oint V_y(\rho \vec{V} \cdot d\vec{A}) = (4)(13.33)(\sin 70°)\left\{(1{,}000)(13.33)\left[\frac{(\pi)(.075)^2}{4}\right]\right\} = 2{,}950 \; N$$

$$\therefore \; K_y = -2{,}950 \; N$$

Hence there is a downward force of

$$F_{Down} = 2{,}950 \; N$$

5.48 http://ingesolucionarios.blogspot.com

A water fountain has four identical spouts of water emerging from a tank inside of which (not shown) is a pump driving the flows in the four spouts. Consider spout *A*. The unit vector $\epsilon$ at the centerline of pipe *A* is given as

$$\epsilon = 0.5\mathbf{i} + 0.4\mathbf{j} + 0.768\mathbf{k}$$

If each pipe has an inside diameter of 3 in, what is the vertical force on the tank and the torque on the tank about the *y* axis at the center of the tank both as a result of the water flowing? The inlet flow at *B* is the *xy* plane.

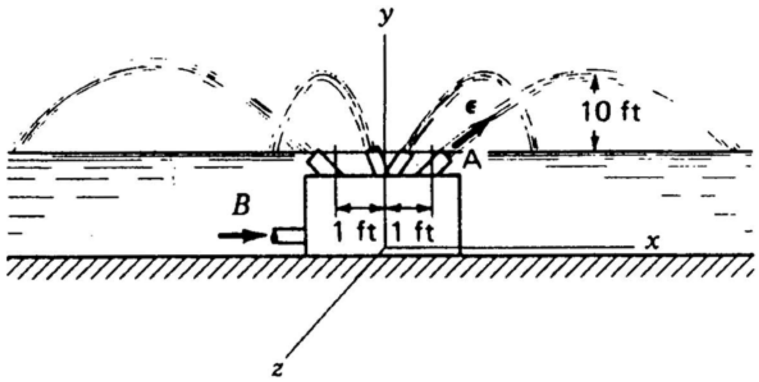


Use **Bernoulli** between (1) and (2). Note that the angle $\beta$ between $\hat{e}$ and the Y axis is:

$$\cos\beta = .4 \qquad \therefore \quad \beta = 66.4°$$

Now we have:

$$\frac{V_1^2}{2} + 0 + 0 = \frac{(V_1 \sin\beta)^2}{2} + 10g + 0$$

$$V_1^2(1-.840) = (2g)(10)$$

$$V_1 = 63.4 \ ft/\text{sec}$$

Next use **linear momentum** in the vertical direction. Noting that the weight is canceled by the dead weight support we have

$$R_y = (4)(V_1 \cos\beta)(1.938)(V_1)\left(\frac{(\pi)(3^2)}{(4)(144)}\right)$$

$$= (4)(63.4)(\cos 66.4°)(1.938)(63.4)\left(\frac{(\pi)(3^2)}{(4)(144)}\right) = 612 \ lb$$

http://ingesolucionarios.blogspot.com

(cont.)

The downward force is then:

$$F_{Down} = 612 \; lb$$

Next we consider the torque about the Y axis. Using the **moment of momentum** equation about the Y axis we have:

$$T_s = [(r)(V_\theta)(\rho VA)](4)$$

Looking at spout A , we have:

$$V_\theta = (V_1 \sin \beta)(\epsilon_z) = (63.4)(\sin 66.4°)(.768) = 44.6 \; ft/\text{sec}$$

Hence:

$$T_s = (1)(44.6)\left[(1.938)(63.4)\left(\frac{(\pi)(3^2)}{(4)(144)}\right)\right]4 = 1{,}076 \; ft\text{-}lb$$

The torque needed for the tank support is:

$$\boxed{T = 1{,}076 \; ft\text{-}lb}$$

http://ingesolucionarios.blogspot.com

# CHAPTER 6

http://ingesolucionarios.blogspot.com
Edu_Zegarr_ch

6.1

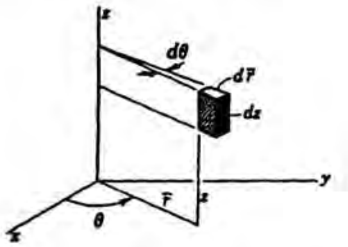


Determine the divergence operator for the vector $\rho V$ for cylindrical coordinates. Use the infinitesimal control volume.

In **radial direction** the net efflux rate is

$$-(\rho V_{\bar{r}})\bar{r}\,d\theta\,dz + \left[\rho V_{\bar{r}} + \frac{\partial(\rho V_{\bar{r}})}{\partial \bar{r}} d\bar{r}\right](\bar{r}+d\bar{r})\,d\theta\,dz$$

This becomes:

$$\rho V_{\bar{r}}\,d\bar{r}\,d\theta\,dz + \frac{\partial(\rho V_{\bar{r}})}{\partial \bar{r}}\bar{r}\,d\bar{r}\,d\theta\,dz + \frac{\partial(\rho V_{\bar{r}})}{\partial \bar{r}}(d\bar{r})^2\,d\theta\,dz$$

We drop the last term. What remains can be expressed as

$$\frac{\partial}{\partial \bar{r}}(\bar{r}\rho V_{\bar{r}})\,d\bar{r}\,d\theta\,dz$$

In the **transverse direction** the net efflux is

$$-(\rho V_\theta)\,d\bar{r}\,dz + (\rho V_\theta + \frac{\partial \rho V_\theta}{\partial\theta}d\theta)d\bar{r}\,dz$$

We then get

$$\frac{\partial(\rho V_\theta)}{\partial\theta}\,d\bar{r}\,dz\,d\theta$$

In the **axial direction** the net efflux rate is:

$$-\rho V_z(d\bar{r}\,\bar{r}\,d\theta) + \left[\rho V_z + \frac{\partial}{\partial z}(\rho V_z)\,dz\right](d\bar{r}\,\bar{r}\,d\theta)$$

We then get:

$$\frac{\partial(\rho V_z)}{\partial z}\bar{r}\,dz\,d\bar{r}\,d\theta$$

The **net efflux rate** per unit volume at a point is then:

$$\frac{1}{\bar{r}}\frac{\partial(\bar{r}\rho V_{\bar{r}})}{\partial \bar{r}} + \frac{1}{\bar{r}}\frac{\partial(\rho V_\theta)}{\partial\theta} + \frac{\partial(\rho V_z)}{\partial z}$$

6.2

Check to see whether or not the velocity fields presented in Probs. satisfy the law of conservation of mass for an incompressible flow.

From 4.1 $\vec{V} = 6x\hat{i} + 6y\hat{j} - 7t\hat{k}$

$$div\,\vec{V} = 6 + 6 + 0 = 12$$

∴ Does not satisfy continuity for incompressible flow.

From 4.5 $\vec{V} = 10\hat{i} + (x^2+y^2)\hat{j} - 2yx\hat{k}$

$$div\,\vec{V} = 0 + 2y = 2y$$

∴ Does not satisfy continuity for incompressible flow.

From 4.6 $\vec{V} = (6+2xy+t^2)\hat{i} - (xy^2+10t)\hat{j} + 25k$

$$div\,\vec{V} = 2y - 2yx$$

∴ Does not satisfy continuity for incompressible flow.

From 4.16 $\vec{V} = -(V_0\cos\theta - \frac{a^2V_0}{\bar{r}^2}\cos\theta)\hat{e}_{\bar{r}} + (V_0\sin\theta + \frac{a^2V_0}{\bar{r}^2}\sin\theta)\hat{e}_\theta$

$$div\,\vec{V} = \frac{1}{\bar{r}}\frac{\partial}{\partial\bar{r}}(\bar{r}V_{\bar{r}}) + \frac{1}{\bar{r}}\frac{\partial V_\theta}{\partial\theta}$$

$$\therefore \frac{1}{\bar{r}}\frac{\partial}{\partial\bar{r}}\left(-\bar{r}V_0\cos\theta + \frac{a^2V_0}{\bar{r}}\cos\theta\right) + \frac{1}{\bar{r}}\frac{\partial}{\partial\theta}\left(V_0\sin\theta + \frac{a^2V_0}{\bar{r}^2}\sin\theta\right) \overset{?}{=} 0$$

$$-\frac{V_0\cos\theta}{\bar{r}} - \frac{a^2V_0\cos\theta}{\bar{r}^3} + \frac{V_0\cos\theta}{\bar{r}} + \frac{a^2V_o\cos\theta}{\bar{r}^3} = 0$$

∴ We do satisfy continuity of incompressible flow.

6.3

For an incompressible flow, $V_x = 30y^2x^3$ m/s and $V_z = 20$ m/s. What is the most information you can give for $V_y$?

$$\frac{\partial V_x}{\partial x} + \frac{\partial V_y}{\partial y} + \frac{\partial V_z}{\partial z} = 0$$

$$(3x^2)(30)y^2 + \frac{\partial V_y}{\partial y} + 0 = 0$$

$$\therefore V_y = -30x^2y^3 + g(x,z)$$

where $g(x,z)$ is an arbitrary function of $x$ and $z$.

6.4

In steady flows of liquids through a straight pipe wherein $v_r = v_\theta = 0$, why can we assert that the velocity profiles along sections of the flow must be invariant?

From continuity:

$$\frac{\partial V_z}{\partial z} = 0$$

$$\therefore V_z = f(r,\theta)$$

That is, the velocity profile can at best be a function of $\theta$ and $r$ and cannot vary with $z$.

6.5

In the study of two-dimensional potential flow, we express the velocity V in terms of a function $\psi$ called the *stream function*. That is,

$$V_x = \frac{\partial \psi}{\partial y}$$

$$V_y = -\frac{\partial \psi}{\partial x}$$

Show that we can satisfy conservation of mass by doing this for incompressible flow.

$div\,\vec{V} = 0$ for incompressible flow.

$$\frac{\partial V_x}{\partial x} + \frac{\partial V_y}{\partial y} = 0$$

Substitute using $\psi$ :

$$\frac{\partial^2 \psi}{\partial x\,\partial y} - \frac{\partial^2 \psi}{\partial y\,\partial x} = 0$$

If the first partial derivatives are continuous, the left side of the equation is zero. Hence we satisfy continuity via this method.

## 6.6

Given the following hypothetical velocity field

$$\mathbf{V} = x^2\mathbf{i} + yx\mathbf{j} + t^2\mathbf{k} \quad \text{m/s}$$

and a density distribution given as

$$\rho = \rho_0[1 + x \times 10^{-2}] \quad \text{kg/m}^3$$

what is the time rate of change of $\rho$ at a position (2, 2, 0) m at time $t = 2$ s? $\rho_0$ is a constant.

$$div\ \rho\vec{V} = -\frac{\partial\rho}{\partial t}$$

$$\rho\vec{V} = \rho_0[1+x\times10^{-2}]\{x^2\hat{i}+yx\hat{j}+t^2\hat{k}\}$$

$$div\ \rho\vec{V} = (\rho_0)(2x+3x^2\times10^{-2}) + \rho_0(1+x\times10^{-2})x = -\frac{\partial\rho}{\partial t}$$

At position (2,2,0) we get for $\frac{\partial\rho}{\partial t}$

$$\rho_0[4+12\times10^{-2}]+\rho_0[1+2\times10^{-2}]2 = -\frac{\partial\rho}{\partial t}$$

$$-\frac{\partial\rho}{\partial t} = \rho_0[4+.12+(2)(1.02)] = 6.16\rho_0$$

$$\therefore \quad \boxed{\frac{\partial\rho}{\partial t} = -6.16\rho_0}$$

## 6.7

One of the famous four Maxwell's equations in electromagnetic theory is given as follows for a vacuum:

$$\text{div}\,\mathbf{E} = \frac{\rho}{\epsilon_0}$$

where $\mathbf{E}$ = electric field, N/C
$\rho$ = charge density, C/M$^3$
$\epsilon_0$ = *dielectric* constant

If the following field is given as

$$\vec{\mathbf{E}} = (y^2 + x^3)\mathbf{i} + (xy + t^2)\mathbf{j} + (3z + 5)\mathbf{k} \quad \text{N/C}$$

with coordinates in meters, what is the charge density at (2, 5, 3) at any time?

$$\frac{\rho}{\epsilon_0} = \frac{\partial}{\partial x}(y^2+x^3) + \frac{\partial}{\partial y}(xy+t^2) + \frac{\partial}{\partial z}(3z+5)$$

$$\rho = \epsilon_0\{3x^2+x+3\}$$

$$\rho_{(2,5,3)} = \epsilon_0(12+2+3) = \boxed{17\epsilon_0}$$

6.8

Suppose that pressure distribution in a steady-flow wave is given as

$$p = 6x^2 + (y + z^2) + 10 \quad Pa$$

If the fluid has a mass density of 1000 kg/m³, ascertain the acceleration that a fluid particle would have at position

$$r = 6i + 2j + 10k \quad m$$

$$p = 6x^2 + (y+z^2) + 10 \ Pa$$

$$\nabla p = 12x\hat{i} + 1\hat{j} + 2z\hat{k} \ Pa/m$$

At $\vec{r} = 6\hat{i} + 2\hat{j} + 10\hat{k} \ m$ , we have

$$\nabla p = 72\hat{i} + \hat{j} + 20\hat{k} \ Pa/m$$

Using Eq. (7.10):

$$-\frac{1}{\rho}\nabla p - q\nabla z = \frac{D\vec{V}}{Dt} = \vec{a}$$

$$-\frac{1}{1{,}000}[72\hat{i} + \hat{j} + 20\hat{k}] - 9.81\hat{k} = \vec{a}$$

$$-.072\hat{i} - .001\hat{j} - .020\hat{k} - 9.81\hat{k} = \vec{a}$$

$$\boxed{\vec{a} = -.0721\hat{i} - .001\hat{j} - 9.83\hat{k} \ m/\text{sec}^2}$$

6.9

Show that the operation $(V \cdot \nabla)V$ gives the acceleration of transport in Euler's equation.

$$(\vec{V}\cdot\nabla)\vec{V} = \left(V_x\frac{\partial}{\partial x} + V_y\frac{\partial}{\partial y} + V_z\frac{\partial}{\partial z}\right)\vec{V}$$

$$= V_x\frac{\partial\vec{V}}{\partial x} + V_y\frac{\partial\vec{V}}{\partial y} + V_z\frac{\partial\vec{V}}{\partial z}$$

6.10

$$-\frac{1}{\rho}\nabla p - g\nabla z = \left(V_x \frac{\partial \vec{V}}{\partial x} + V_y \frac{\partial \vec{V}}{\partial y} + +V_z \frac{\partial \vec{V}}{\partial z}\right) + \frac{\partial \vec{V}}{\partial t}$$

$$= (x^2+y^2)(2x\hat{i}+3y^2\hat{j}) + (3xy^2)(2y\hat{i}+6xy\hat{j}) + (16t^2+z)(\hat{k}) + 32t\hat{k}$$

$$-\frac{1}{\rho}\nabla p - g\nabla z = (2x^3+2xy^2+6xy^3)\hat{i} + [(x^2+y^2)(3y^2) + (18x^2y^3)]\hat{j} + [(16t^2+z) + 32t]\hat{k}$$

A nonviscous flow has the following velocity field:

$\mathbf{V} = (x^2+y^2)\mathbf{i} + 3xy^2\mathbf{j} + (16t^2+z)\mathbf{k}$ m/s

The density $\rho$ is to be considered constant. What is the rate of change of pressure in the $x$ direction at a position (1, 1, 0)? Is the pressure variation in any coordinate direction changing with time? What is this time variation at (1, 0, 2) m?

$$\therefore \ \frac{\partial p}{\partial x} = -\rho(2x^3+2xy^2+6xy^3)$$

$$\frac{\partial p}{\partial y} = -\rho(3y^2x^2+3y^4+18x^2y^3)$$

$$\frac{\partial p}{\partial z} = -\rho[(16t^2+32t+z)+g]$$

**At (1,1,0)**

$$\frac{\partial p}{\partial x} = -\rho[2+2+6] = -10\rho \ \ Pa/m$$

Therefore,

$$\frac{\partial p}{\partial x} = -10\rho \ \ Pa/m$$

The pressure variation in the $z$ direction is changing with time. Thus

$$\frac{\partial p}{\partial z} = -\rho(16t^2+32t+z+g)$$

At (1,0,2) this pressure variation in the $z$ direction is:

$$\frac{\partial p}{\partial z} = -\rho(16t^2+32t+2+9.81) \ \ Pa/m$$

$$\boxed{\frac{\partial p}{\partial z} = -\rho[16t^2+32t+11.81] \ \ Pa/m}$$

6.11

A tank weighs 80 N and contains 0.25 m³ of water. A force of 100 N acts on the tank. What is θ when the free surface of the water assumes a fixed orientation relative to the tank?

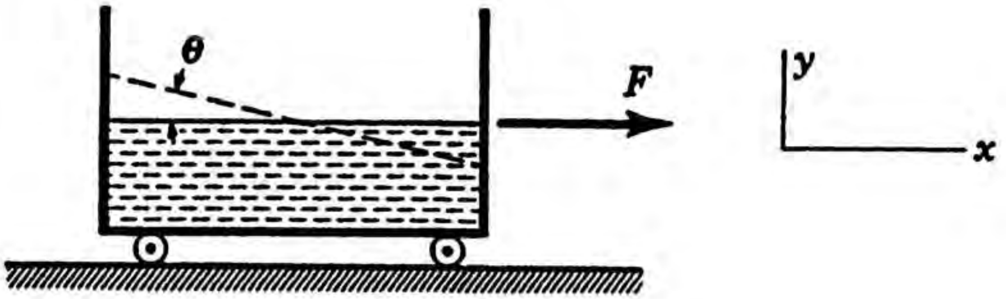


From **Newton's** law the acceleration, once the water has stabilized, is

$$a_x = \frac{F}{M} = \frac{100}{\frac{80}{g} + (1{,}000)(.25)} = .387\ m/\text{sec}^2$$

From Eq. 6.19

$$\left(\frac{dy}{dx}\right)_{fs} = -\frac{a_x}{g+a_y} = -\left(\frac{.387}{9.81+0}\right) = -.0395$$

$$\therefore\ \tan\beta = -.0395$$

$$\beta = -2.26°$$

$$\therefore\quad \boxed{\theta = 2.26°}$$

6.12

A tank of water [illegible] is given a constant acceleration $a_y$. If the water is not to spill out when a fixed configuration of the water is reached relative to the tank, what is the largest acceleration permissible?

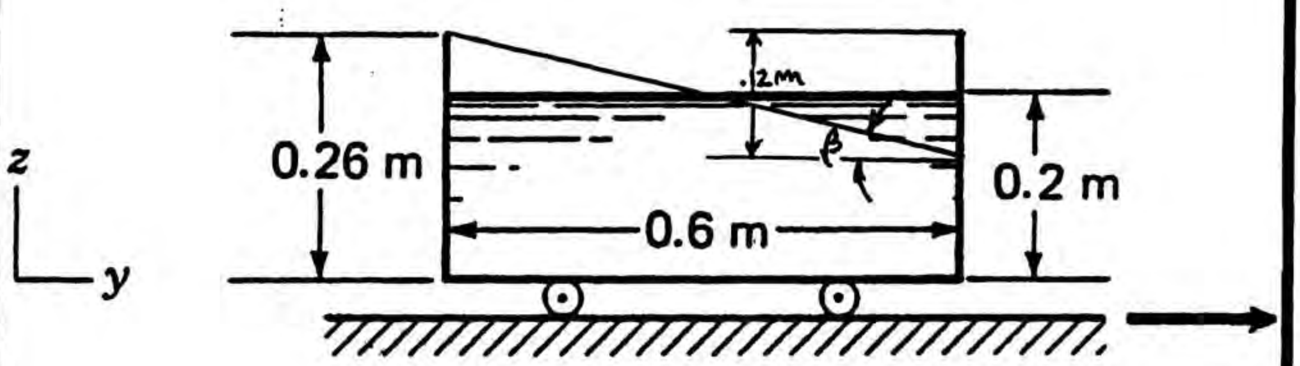


$$\tan\beta = \frac{.12}{.6} \qquad \therefore\ \beta = 11.31^\circ$$

$$\therefore \left(\frac{dz}{dy}\right)_{fs} = \tan(-11.31^\circ) = -.200$$

Going to eq. 6.19 we get

$$-.200 = -\frac{a_y}{9.81}$$

$$\boxed{a_y = 1.962\ m/\text{sec}^2}$$

6.13

To construct a simple device for measuring acceleration, take a capillary tube in the shape of a U tube and put in oil to the level shown of 300 mm. If the vehicle to which this U tube is attached accelerates so that the oil assumes the orientation shown, what is the acceleration that you would mark on the acceleration scale at position $A$?

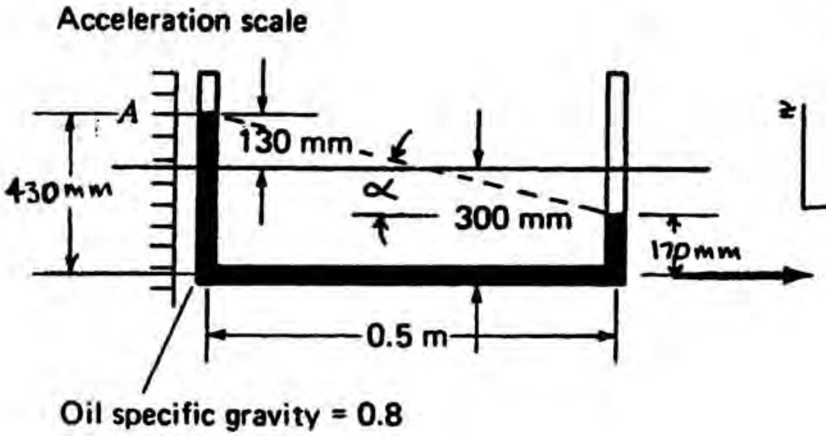


Make believe you had a tank of oil of unit width and having the outer outline of the $U$ tube as has been shown. Then from Eq. 6.19 we have

$$\left(\frac{dz}{dy}\right)_{fs} = -\left[\frac{a_y}{g+0}\right] \qquad \text{(a)}$$

$$\alpha = \tan^{-1}\left(\frac{260}{500}\right) = 27.5°$$

$$\frac{dz}{dy} = \tan(180° - 27.5°) = -.520$$

Going back to Eq. (a)

$$-.520 = -\left(\frac{a_y}{9.81}\right)$$

$$\therefore \quad \boxed{a_y = 5.10\ m/\text{sec}^2}$$

6.14

A rectangular container is given a constant acceleration $a$ of 0.4 g's. What is the force from fluids on the left wall $AB$ when a fixed configuration of the water has been reached relative to the tank? The width of the tank is 1.5 ft. Use integration procedures

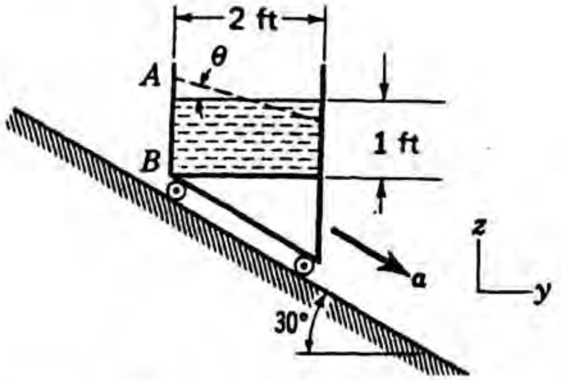


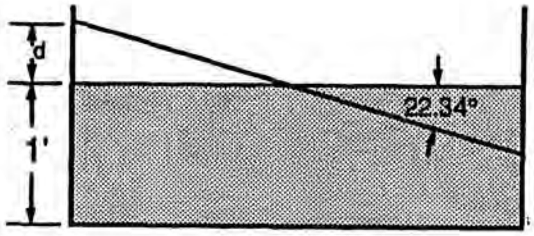


From Eq. (6.19)

$$\left(\frac{dz}{dy}\right) = -\left[\frac{(.4)(32.2)(\cos 30°)}{(32.2)-(.4)(32.2)(\sin 30°)}\right] = -.433$$

$$\therefore\ \theta = 23.4° \qquad \frac{d}{1} = \tan 23.4° \qquad d = .433\ ft$$

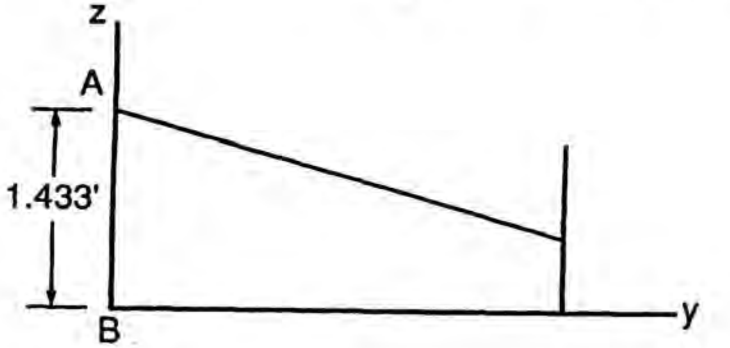


From Eq. (6.17)

$$p_* = C - \gamma y \frac{a_y}{g} - \gamma z\left(1 + \frac{a_z}{g}\right)$$

Find C.

When $y = 0$ , $z = 1.433$ , $p = 0\ gauge$

$$\therefore\ 0 = C - \gamma(0)\frac{a_y}{g} - \gamma(1.433)\left(1 + \frac{a_z}{g}\right)$$

$$C = (\gamma)(1.433)\left(1 + \frac{-(.4)(g)(\sin 30°)}{g}\right) = \gamma(1.433)(.8)$$

cont.)

Along $y = 0$, we get

$$p = (\gamma)(1.433)(.8) - \gamma z(.8) = (62.4)(.8)(1.433 - z)$$

$$F = \int_0^{1.433} \underbrace{[(62.4)(.8)(1.433-z)]}_{p}\underbrace{(dz)(1.5)}_{dA}$$

$$= (62.4)(.8)(1.5)\left[(1.433)^2 - \frac{(1.433)^2}{2}\right] =$$

**76.9 lb**

6.15

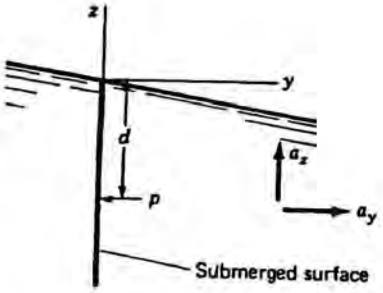


Using Eq. (6.17), show that for a *vertical* plane submerged surface in a liquid having constant acceleration components $a_y$ and $a_z$, the gage pressure $p$ can be given as

$$p = \bar{\gamma} d$$

where $d$ is the depth *below* the free surface and $\bar{\gamma}$ is given as

$$\bar{\gamma} = \gamma\left(1 + \frac{a_z}{g}\right)$$

This means that using $\bar{\gamma}$ we can compute the force of the liquid on a vertical plane surface as well as the center of pressure exactly as was done in the chapter on hydrostatics.

We start with Eq. (6.17) using the reference shown in the problem statement. With $y$ set equal to zero we have:

$$p = C - (\gamma)(z)\left(1 + \frac{a_z}{g}\right)$$

When $z = 0$, $p = 0$, hence $C = 0$. When $z = -d$ we have for $p$

$$p = \left[\gamma\left(1 + \frac{a_z}{g}\right)\right]d = \bar{\gamma} d \qquad \text{Q.E.D.}$$

6.16

In Prob. 6.14 using the results of the preceding problem, find the force on wall $AB$ as well as the center of pressure. The height of water on the wall $AB$ was worked out to be 1.433 ft.

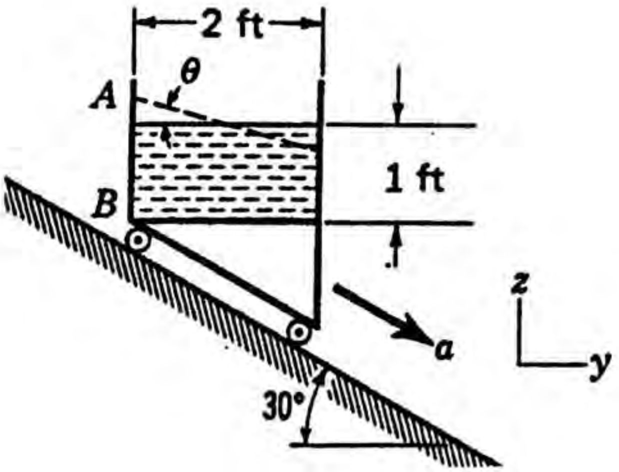


$$F = (\bar{\gamma} d_c)(A)$$

where $d_c$ is the distance to the centroid from the free surface.

$$F = \left[\gamma\left(1 + \frac{a_z}{g}\right)\right](d_c)A$$

$$= (62.4)\left[1 + \frac{(-.4g)(\sin 30°)}{g}\right]\frac{1.433}{2}(1.5)(1.433)$$

$$= 76.9\ lb.$$

$$z - z_c = \frac{\gamma \sin\theta\, I_{\xi\xi}}{p_c A} = \frac{(62.4)(1)\left(\frac{1}{12}\right)(1.5)(1.433)^3}{(1.433)(1.5)\left(\frac{1.433}{2}\right)(62.4)} = .239\ ft$$

∴ Center of pressure is at a distance

$$\frac{1.433}{2} - .239 = \boxed{.4777\ ft}$$

above $B$.

## 6.17

In Example 6.2, locate the position of the center of pressure from point $A$.

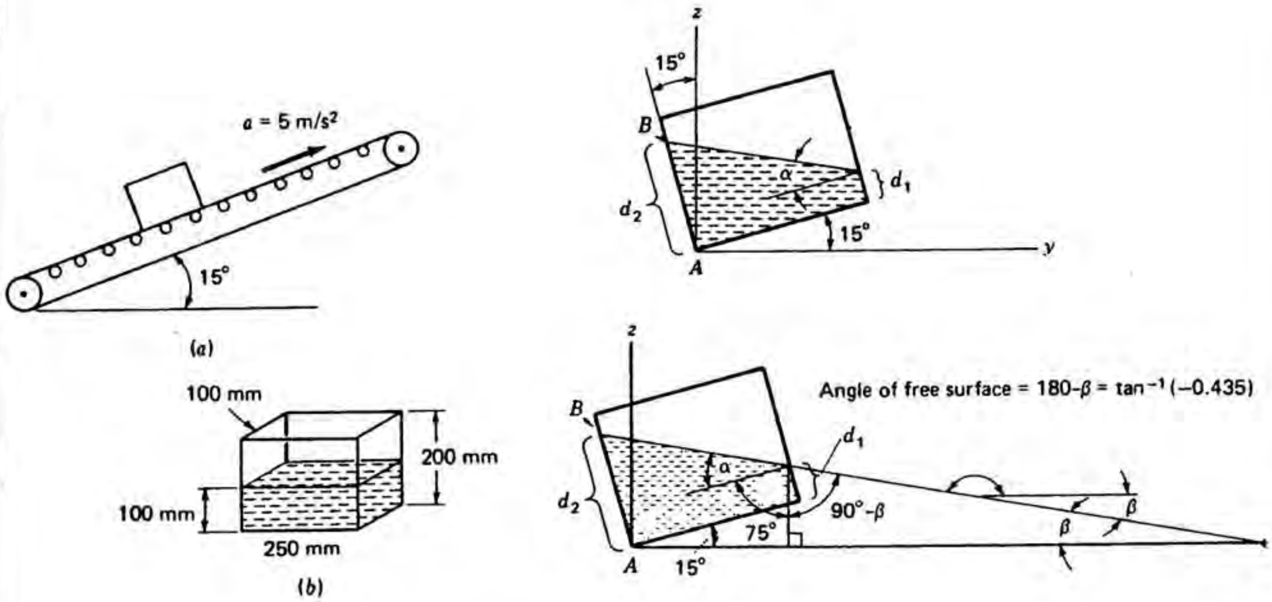


From Eq. (c) Example 6.2 we have

$$df = (-947\eta + 1.89)d\eta$$

Hence, equating moments about point $A$ (see Fig. )

$$(18.86)(\bar{\eta}) = \int_0^{.1995} (-947\eta + 189)\,\eta\, d\eta$$

$$\bar{\eta} = \frac{1}{18.86}\left[-947\frac{\eta^3}{3} + 189\frac{\eta^2}{2}\right]\Bigg|_0^{.1995}$$

$$\bar{\eta} = .0665\ m$$

$\therefore$ **.0665 *m from A***

6.18

A container has a constant width of 500 mm and contains water as shown. It is accelerated uniformly to the right at a rate of 2 m/s². What is the total force on side $AB$ when the water has assumed a stationary configuration relative to the container?

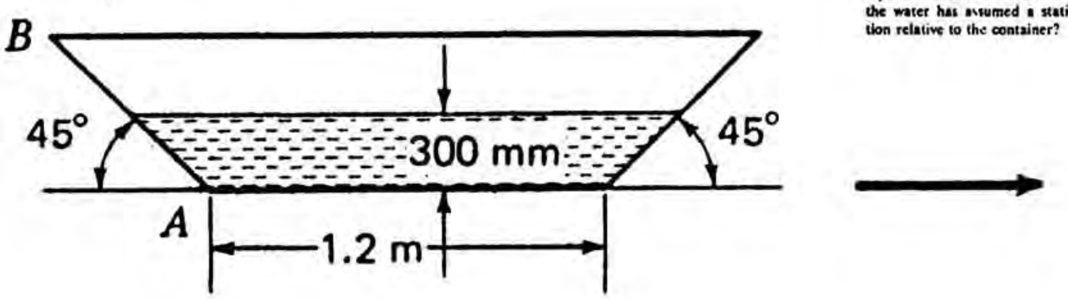


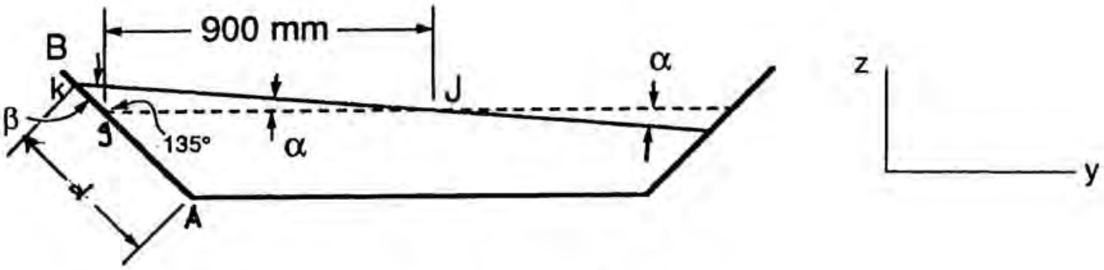


$$\frac{dz}{dy} = -\frac{a_y}{g+a_z} = -\left(\frac{2}{9.81}\right) = -.204$$

Hence, $\alpha = 11.52°$ . Note that $\overline{gJ} = \frac{1}{2}[1{,}200+(2)(300)] = 900\ mm$ . Furthermore,

$$\beta = 180° - 135° - 11.52° = 33.5°$$

From law of sines

$$\frac{\overline{gk}}{\sin\alpha} = \frac{900}{\sin\beta} \qquad \overline{gk} = (900)\left(\frac{\sin 11.52°}{\sin 33.5°}\right) = 326\ mm$$

$$\therefore\ d = \frac{300}{.707} + 326 = 750\ mm$$

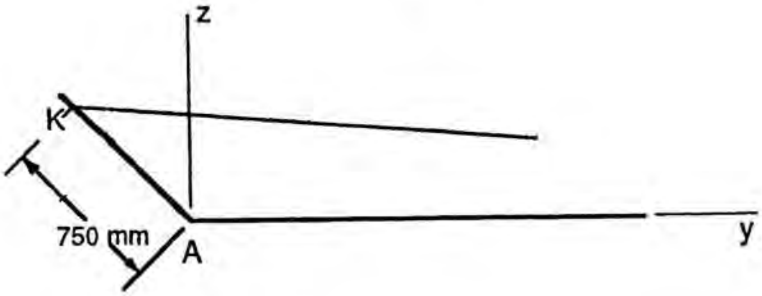

Go to Eq. (6.17):

$$p = C - \gamma y \frac{a_y}{g} - \gamma z \left[1 + \frac{a_z}{g}\right] = C - (9{,}806)\left(\frac{2}{9.81}\right)y - (9{,}806)z \qquad (1)$$

$$p = C - 1{,}999y - 9{,}806z$$

When $\quad y = -(.750)(.707) \quad z = (.750)(.707) \quad p = 0 \text{ } gauge$

Going to Eq. (1), we have for $C$ :

$$0 = C - (1{,}999)(-.750)(.707) - (9806)(.750)(.707) \qquad C = 4{,}140$$

$$\therefore \; p = 4{,}140 - 1{,}999y - 9{,}806z \; Pa$$

$$F = \int_0^{.750} p\, d\eta (.500)$$

$$= \int_0^{.750} [4{,}140 - (1{,}999)(-\eta)(.707) - (9{,}806)(\eta)(.707)](.500)\, d\eta$$

$$= .500\left[(4{,}140)(.750) + (1{,}999)(.707)\frac{(.750)^2}{2} - (9{,}806)(.707)\frac{(.750)^2}{2}\right]$$

**$F = 776 \; N$**

6.19

. Show that the free-surface profile of a rotating liquid once steady state has been achieved is independent of the density $\rho$.

Start with Eq. (7.24)

$$\frac{\rho\omega^2}{2}r^2 - \rho g z = -C \qquad (1)$$

Let $z = z_0$ where $r = r_0$ and when $\omega = \omega_0$

$$\rho\left[\frac{\omega_0^2}{2}r_0^2 - gz_0\right] = -C$$

Go back to Eq. (1)

$$\rho\left[\frac{\omega^2}{2}r^2 - gz\right] = \rho\left[\frac{\omega_0 r_0^2}{2} - gz_0\right] \qquad (2)$$

Eq. (2) is the equation of the free surface. Notice that $\rho$ cancels out. Hence the profile is independent of $\rho$ .

**6.20**

The system shown at rest is rotated at a speed of 24 r/min. When steady state has been reached, what height *h* will the fluid reach in the outer capillary tubes? Do not consider capillary effects.

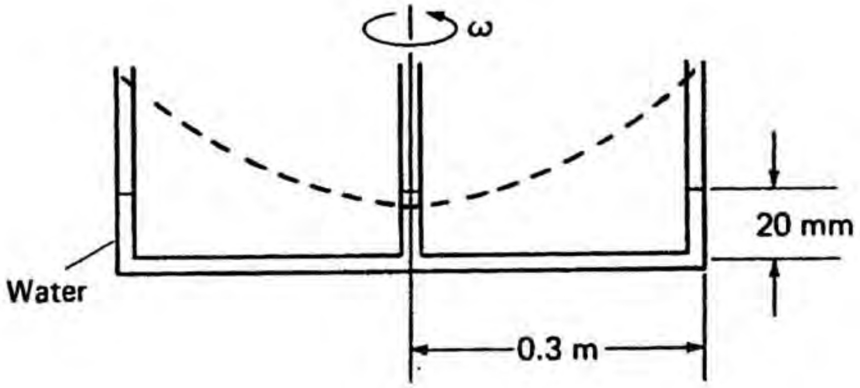


From Eq. (6.24)

$$\frac{\rho \omega^2}{2} r^2 - \rho g z = -C \qquad (1)$$

When $r = .3$ and $\omega = 24\left(\frac{2\pi}{60}\right) = .8\pi$ we get $z = h$ . Hence

$$\frac{1{,}000}{2}(.8\pi)^2(.3)^2 - (9{,}806)(h) = -C$$

$$\therefore \ -C = 284.2 - 9{,}806h$$

Hence $\qquad 3{,}158r^2 - 9{,}806z = 284.2 - 9{,}806h$

From **continuity**, when $r = 0$ , $z = .0200 - 2(h - .020) = .0600 - 2h$

Subst. into (1) $\qquad -9{,}806[.0600 - 2h] = 284.2 - 9{,}806h$

$$.0600 - 2h = -.0290 + h$$

$$h = .0297m = \boxed{29.7\ mm}$$

6.21

On rotating the system at a speed $\omega$ of 30 r/min, what height $h$ does the water rise to in the vertical capillary tubes after steady state has been achieved? Do not consider capillary effects.

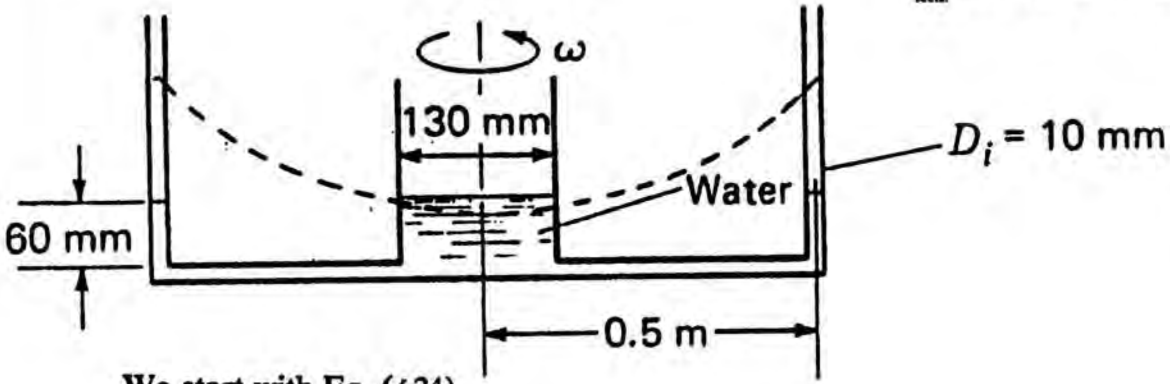


We start with Eq. (6.24)

$$\frac{\rho\omega^2}{2}r^2 - \rho g z = -C$$

When $\omega = (30)\left(\frac{2\pi}{60}\right) = \pi$ and $r = .5$ , then $z = h$ .

$$\therefore \quad \frac{(1{,}000)(\pi)^2}{2}(.5)^2 - 9{,}806h = -C$$

$$C = -1234 + 9{,}806h$$

$$\therefore \ 4{,}935r^2 - 9{,}806z = 1{,}234 - 9{,}806h$$

$$z = h + .503r^2 - .1258$$

**Continuity** (cancel density $\rho$)

$$(2)(.060)\left(\frac{\pi}{4}\right)(.010)^2 + \frac{\pi(.130)^2}{4}(.060) = (2)\left(\frac{\pi}{4}\right)(.010)^2(h) + \int_0^{.065}(2\pi r)\,dr\,z$$

$$8.06\times10^{-4} = 1.571\times10^{-4}h + 2\pi\int_0^{.065} r(h+.503r^2-.1258)\,dr$$

Solve for $h$

$$\boxed{h = 183.3 \ mm}$$

6.22

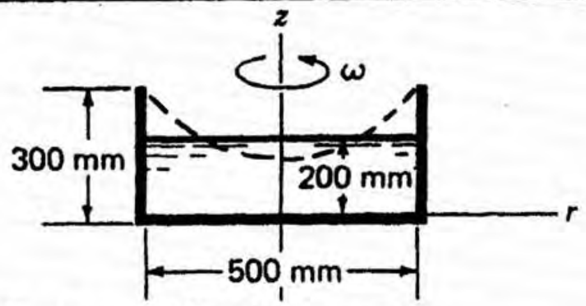


A tank of water is to be spun at an angular speed of ω radians per second. At what speed will the water begin to spill out when it reaches a steady-state configuration relative to the tank?

We start with Eq. (6.24) for the free surface

$$(1) \quad \frac{\rho\omega^2}{2} r^2 - \rho g z = -C$$

When $r = .250$ , $z = .300$ . Solve for $C$ .

$$\frac{(1{,}000)(\omega^2)}{2}(.250)^2 - (9{,}806)(.300) = -C$$

$$C = 2{,}942 - 31.25\omega^2$$

$$\therefore \left(\frac{\rho\omega^2}{2}\right) r^2 - \rho g z = 31.25\omega^2 - 2{,}942 \qquad (2)$$

Now use **conservation of mass.**

$$\frac{(\pi)(.500)^2}{4}(.200)(1{,}000) = \int_0^{.250} (2\pi r)(dr)(z)(1{,}000) \qquad (3)$$

But from Eq. (2) we have for $z$ :

$$z = \frac{1}{\rho g}\left[\frac{\rho\omega^2}{2} r^2 + 2{,}942 - 31.25\omega^2\right]$$

Subst. into (3):

$$\frac{(\pi)(.500)^2}{4}(.200) = 2\pi \int_0^{.250} r \frac{1}{\rho g}\left[\frac{\rho\omega^2}{2} r^2 + 2{,}942 - 31.25\omega^2\right] dr$$

$$\frac{(\pi)(.500)^2(.200)(9{,}806)}{(4)(2\pi)} = \left[\frac{\rho\omega^2}{2}\left(\frac{.250^4}{4}\right) + (2{,}942)\frac{(.250)^2}{2} - 31.25\omega^2\frac{(.250)^2}{2}\right]$$

$$\boxed{\omega = 7.92\ rad/sec}$$

6.23

In Prob. 6.22, we found that $\omega = 7.92$ rad/s and the equation of the free surface is

$$z = \frac{1}{\rho g}\left(\frac{\rho\omega^2}{2}r^2 + 2942 - 31.25\omega^2\right) \text{ m}$$

Find the center of pressure at the bottom of the tank for a semicircular part of the base area.

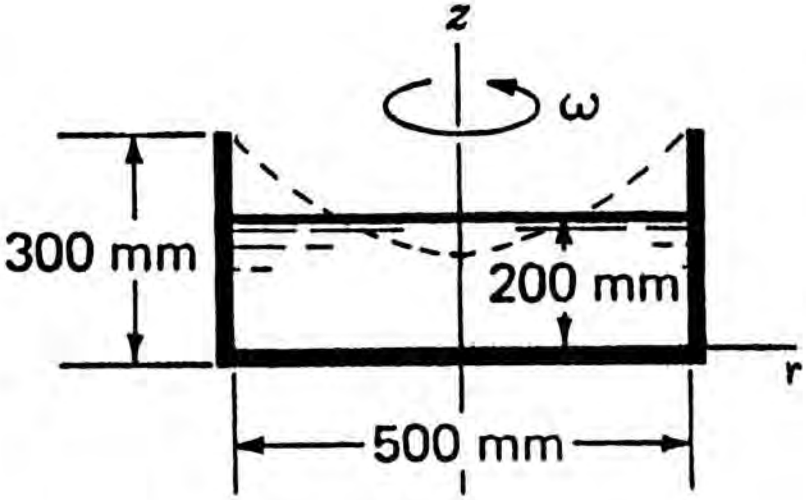


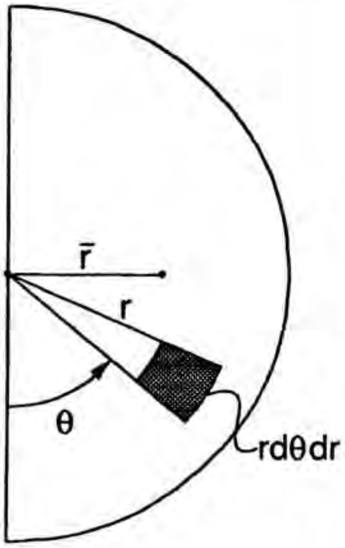


The force on the semicircle is $\frac{1}{2}$ the weight of the water. Thus

$$F = \frac{1}{2}\left[\frac{(\pi)(.500)^2}{4}(.200)\right](9{,}806) = 192.5N$$

$$dM = \gamma z\, dA\, r\sin\theta = \gamma\left(\frac{1}{\rho g}\right)\left[\frac{\rho\omega^2}{2}r^2 + 2{,}942 - 31.25\omega^2\right]r^2\sin\theta\, d\theta\, dr$$

Taking moments about the diameter

$$F\bar{r} = \int_0^{\pi}\int_0^{.250}\left[\frac{\rho\omega^2}{2}r^2 + 2{,}942 - 31.25\omega^2\right]r^2\sin\theta\, d\theta\, dr$$

$$\bar{r} = \frac{2}{192.5}\left[\frac{(1{,}000)(7.92)^2}{2}\left(\frac{.250^5}{5}\right) + (2{,}942)\left(\frac{.250^3}{3}\right) - (31.25)(7.92)^2\,\frac{(.250)^3}{3}\right]$$

$$\boxed{\bar{r} = .1168\ m}$$

## 6.24

What body-force distribution is needed to maintain the following stress field in equilibrium in a solid?

$$\tau_{ij} = \begin{bmatrix} 500x^3 & 0 & (10z^2 + 580) \\ 0 & -800y^2x^2 & -1000zy^2 \\ (10z^2 + 580) & -1000zy^2 & 0 \end{bmatrix} \text{ Pa}$$

$$\frac{\partial \tau_{xx}}{\partial x} + \frac{\partial \tau_{xy}}{\partial y} + \frac{\partial \tau_{xz}}{\partial z} = -\rho B_x$$

$$\therefore\ B_x = -\frac{1}{\rho}[1{,}500x^2 + 0 + 20z] \quad N/kg$$

$$\frac{\partial \tau_{yx}}{\partial x} + \frac{\partial \tau_{yy}}{\partial y} + \frac{\partial \tau_{yz}}{\partial z} = -\rho B_y$$

$$\therefore\ B_y = -\frac{1}{\rho}[0 - 1{,}600yx^2 - 1{,}000y^2] \quad N/kg$$

$$\frac{\partial \tau_{zx}}{\partial x} + \frac{\partial \tau_{zy}}{\partial y} + \frac{\partial \tau_{zz}}{\partial z} = -\rho B_z$$

$$\therefore\ B_z = -\frac{1}{\rho}[0 - 2{,}000zy + 0] \quad N/kg$$

$$\vec{B} = \frac{1}{\rho}\{-(1{,}500x^2 + 20z)\hat{i} + (1{,}600yx^2 + 1{,}000y^2)\hat{j} + (2{,}000zy)\hat{k}\} \quad N/kg$$

6.25

For cylindrical coordinates, derive the equations of motion using the differential element shown

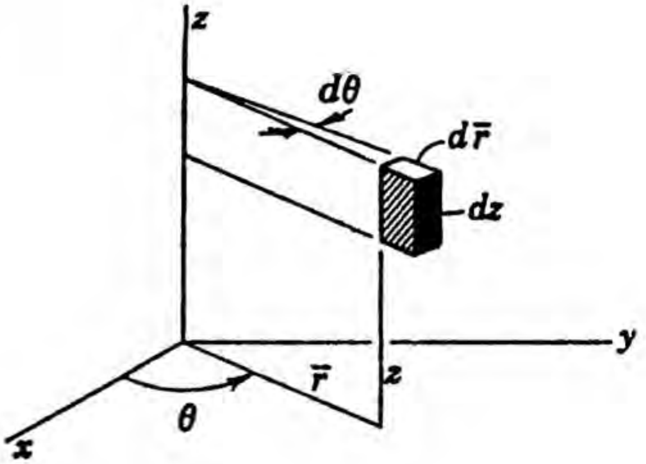


**In $r$ direction**

$$-\tau_{rr}(r\,d\theta)dz + \left(\tau_{rr} + \frac{\partial \tau_{rr}}{\partial r}dr\right)(r+dr)d\theta\,dz$$

$$-\tau_{\theta\theta}\,dr\,dz\sin\frac{d\theta}{2} - \left(\tau_{\theta\theta} + \frac{\partial \tau_{\theta\theta}}{\partial \theta}d\theta\right)dr\,dz\sin\frac{d\theta}{2}$$

$$-\tau_{\theta r}\,dz\,dr\cos\frac{d\theta}{2} + \left(\tau_{\theta r} + \frac{\partial \tau_{\theta r}}{\partial \theta}d\theta\right)dz\,dr\cos\frac{d\theta}{2} + B_r\rho\,r\,d\theta\,dr\,dz = 0$$

Canceling terms:

$$\tau_{rr}\,dr\,d\theta\,dz + \frac{\partial \tau_{rr}}{\partial r}dr\,r\,d\theta\,dz + \frac{\partial \tau_{rr}}{\partial r}dr\,dr\,d\theta\,dz - \tau_{\theta\theta}\,dr\,dz\frac{d\theta}{2} - \tau_{\theta\theta}\,dr\,dz\frac{d\theta}{2}$$

$$-\frac{\partial \tau_{\theta\theta}}{\partial \theta}d\theta\,dr\,dz\frac{d\theta}{2} + \rho B_r r\,d\theta\,dr\,dz + \frac{\partial \tau_{\theta r}}{\partial \theta}dr\,d\theta\,dz = 0$$

$$\frac{\tau_{rr}}{r} + \frac{\partial \tau_{rr}}{\partial r} - \frac{\tau_{\theta\theta}}{r} + \frac{1}{r}\frac{\partial \tau_{\theta r}}{\partial \theta} + \rho B_r = 0$$

$$\frac{\tau_{rr} - \tau_{\theta\theta}}{r} + \frac{\partial \tau_{rr}}{\partial r} + \frac{1}{r}\frac{\partial \tau_{\theta r}}{\partial \theta} + B_r\rho = 0$$

## 6.26

A flow field has the stress field given in Prob. 6.24 with only gravity as a body force in the $z$ direction. What is the convective acceleration at position (1, 2, 0)m? Take $\rho$ as constant.

$$\frac{\partial}{\partial x}(500x^3) + \frac{\partial}{\partial y}(0) + \frac{\partial}{\partial z}(10z^2 + 580) = \rho(a_x)_{conv}$$

$$\therefore\ 1{,}500x^2 + 20z = \rho(a_x)_{conv}$$

$$\frac{\partial}{\partial x}(0) + \frac{\partial}{\partial y}(-800y^2x^2) + \frac{\partial}{\partial z}(-1000zy^2) = \rho(a_y)_{conv}$$

$$\therefore\quad -1{,}600yx^2 - 1{,}000y^2 = \rho(a_y)_{conv}$$

$$\frac{\partial}{\partial x}(10z^2+580) + \frac{\partial}{\partial y}(-1000zy^2) - \rho g = \rho(a_z)_{conv}$$

$$\therefore -2000zy - \rho g = \rho(a_z)_{conv}$$

$$\rho\vec{a}_{conv} = (1{,}500x^2+20z)\hat{i} - (1{,}600yx^2+1{,}000y^2)\hat{j} - (2{,}000yz+\rho g)\hat{k}$$

At (1,2,0) we have:

$$[\vec{a}_{conv}]_{(1,2,0)} = \frac{1}{\rho}[1{,}500\hat{i} - (3{,}200+4{,}000)\hat{j} - (\rho g)\hat{k}]$$

$$[\vec{a}_{conv}]_{(1,2,0)} = \frac{1}{\rho}[1{,}500\hat{i} - 7{,}200\hat{j} - (\rho g)\hat{k}]\quad m/\text{sec}^2$$

6.27

What are the equations of motion for two-dimensional flow parallel to the $xy$ plane with no body forces except gravity in the $z$ direction? Show that if

$$\tau_{xx} = \frac{\partial^2 \Phi}{\partial y^2}$$

$$\tau_{yy} = \frac{\partial^2 \Phi}{\partial x^2}$$

$$\tau_{xy} = -\frac{\partial^2 \Phi}{\partial x\,\partial y}$$

where $\Phi$ is a scalar function, then there will be zero acceleration everywhere. This is done in solid mechanics to satisfy equilibrium. The function $\Phi$ is then called the *Airy function*.

For two-dimensional flow, the equations of **equilibrium** become:

$$\frac{\partial \tau_{xx}}{\partial x} + \frac{\partial \tau_{xy}}{\partial y} = \rho a_x$$

$$\frac{\partial \tau_{xy}}{\partial x} + \frac{\partial \tau_{yy}}{\partial y} = \rho a_y$$

Subst. for stresses

$$\frac{\partial^3 \phi}{\partial x\,\partial y^2} - \frac{\partial^3 \phi}{\partial y^2 \partial x} = \rho a_x$$

$$-\frac{\partial^3 \phi}{\partial x^2 \partial y} + \frac{\partial^3 \phi}{\partial y\,\partial x^2} = \rho a_y$$

$$\therefore\ a_x = a_y = 0$$

6.28

Consider a flow as shown Formulate Newton's law in the direction $n$ normal to the streamline using the indicated infinitesimal system. Reach the following result:

$$\frac{V^2}{R} - \frac{1}{\rho}\frac{\partial p}{\partial n} - g\frac{\partial z}{\partial n} = \frac{\partial V_n}{\partial t} \qquad (a)$$

where $V_n$ is the component of velocity normal to the streamline.

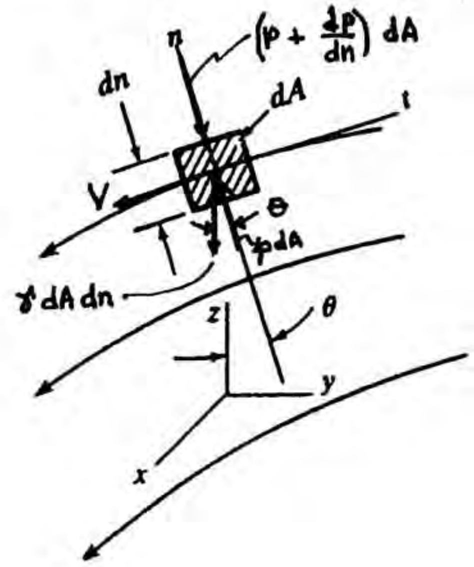


<u>Newton's Law in Direction $n$</u>

$$-\left(p + \frac{\partial p}{\partial n}\,dn\right)dA + p\,dA - r\,dA\,dn\cos\theta = \rho\,dA\,dn\,a_n$$

$$-\frac{\partial p}{\partial n}\,dn\,dA - \gamma\,dA\,dn\cos\theta = \rho\,dA\,dn\left(-\frac{V^2}{R} + \frac{\partial V_n}{\partial t}\right)$$

$$\frac{V^2}{R} - \frac{1}{\rho}\frac{\partial p}{\partial n} - g\cos\theta = \frac{\partial V_n}{\partial t}$$

But $\cos\theta = \dfrac{\partial z}{\partial n}$

$$\therefore \quad \boxed{\frac{V^2}{R} - \frac{1}{\rho}\frac{\partial p}{\partial n} - g\frac{\partial z}{\partial n} = \frac{\partial V_n}{\partial t}}$$

6.29

A viscous Newtonian fluid film flows steadily down a tube of radius          The film thickness is constant equal to $(r_2 - r_1)$. What is the velocity profile $V$ as a function of $r$, $\gamma$, $\mu$, $r_1$, and $r_2$? The ends of the film at top and between are at atmospheric pressure.

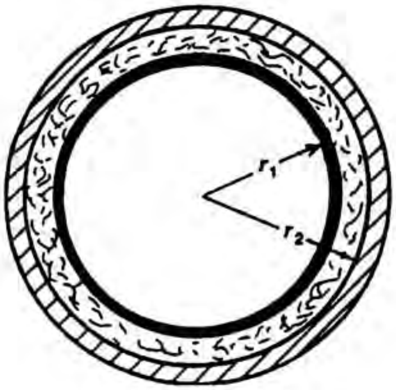


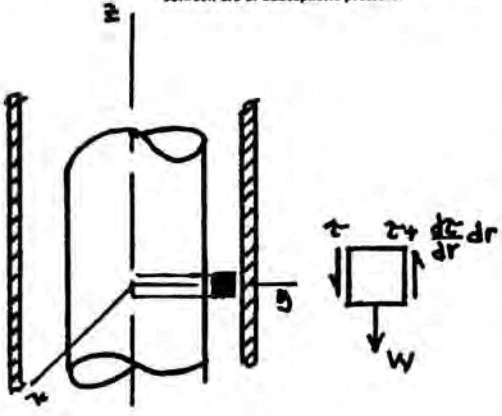


Equilibrium:

$$-\tau(r\,d\theta\,dz) + \left(\tau + \frac{d\tau}{dr}dr\right)(r+dr)d\theta\,dz - \gamma(r\,d\theta)dz\,dr = 0$$

$$\tau\,dr\,d\theta\,dz + \frac{d\tau}{dr}dr\,r\,d\theta\,dz + \frac{d\tau}{dr}dr^2 d\theta\,dz - \gamma r\,d\theta\,dz\,dr = 0$$

$$\therefore \quad \tau + r\frac{d\tau}{dr} = \gamma r \qquad \frac{d}{dr}(r\tau) = \gamma r \qquad d(r\tau) = \gamma r\,dr$$

Integrate: $$\tau r = \frac{\gamma r^2}{2} + C_1$$

Use **Newton's viscosity** law:

$$r\mu\frac{dV}{dr} = \frac{\gamma r^2}{2} + C_1$$

$$dV = \frac{\gamma}{2\mu}\left(r + \frac{C_1}{r}\right)dr$$

$$V = \frac{\gamma}{2\mu}\left[\frac{r^2}{2} + C_1 \ln r\right] + C_2$$

**(cont.)**

Boundary Conditions: When $\begin{cases} r = r_1 & V = 0 \\ r = r_2 & V = 0 \end{cases}$

$$0 = \frac{\gamma}{2\mu}\left[\frac{r_1^2}{2} + C_1 \ln r_1\right] + C_2 \qquad 0 = \frac{\gamma}{2\mu}\left[\frac{r_2^2}{2} + C_1 \ln r_2\right] + C_2$$

$$\therefore \ C_1 = \frac{\dfrac{r_2^2 - r_1^2}{2}}{\ln \dfrac{r_1}{r_2}} \qquad C_2 = -\frac{\gamma}{2\mu}\left[\frac{r_2^2}{2} + \left(\frac{\dfrac{r_2^2 - r_1^2}{2}}{\ln \dfrac{r_1}{r_2}}\right)\ln r_2\right]$$

Hence,

$$\therefore \ V_z = \frac{\gamma}{2\mu}\left\{\frac{r^2}{2} + \left(\frac{\dfrac{r_2^2 - r_1^2}{2}}{\ln \dfrac{r_1}{r_2}}\right)\ln r - \frac{r_2^2}{2} - \frac{r_2^2 - r_1^2}{2}\,\frac{1}{\ln \dfrac{r_1}{r_2}}\,\ln r_2\right\}$$

$$\boxed{V_z = \frac{\gamma}{4\mu}\left\{r^2 - r_2^2 + \frac{r_2^2 - r_1^2}{\ln \dfrac{r_1}{r_2}}\ln \frac{r}{r_2}\right\}}$$

http://ingesolucionarios.blogspot.com

6.30

**NOTICE. In printings subsequent to the first printing, Problem 6.30 will be modified by the addition of the following sentance:**

Work this problem using as the equation of motion to be given later in Chapter 9 as

$$\frac{d^2\upsilon_\theta}{dr^2} + \frac{d}{dr}\left(\frac{\upsilon_\theta}{r}\right) = 0$$

This is one of the Navier-Stokes equations to be studied later.

An infinite cylinder of radius $a$ rotates with constant angular speed of $\omega$ rad/s inside a stationary journal of radius $b$ as shown in Fig. P7.30. Oil of viscosity $\mu$ kg/ms separates the cylinder from the journal. The oil is Newtonian. Find the transverse velocity field $\upsilon_\theta$ of the oil as a function of $r$ and the pertinent parameters of geometry and fluid properties. Assume steady-state conditions have been reached and that we can use Newton's viscosity law despite the fact that the flow is not a parallel flow.

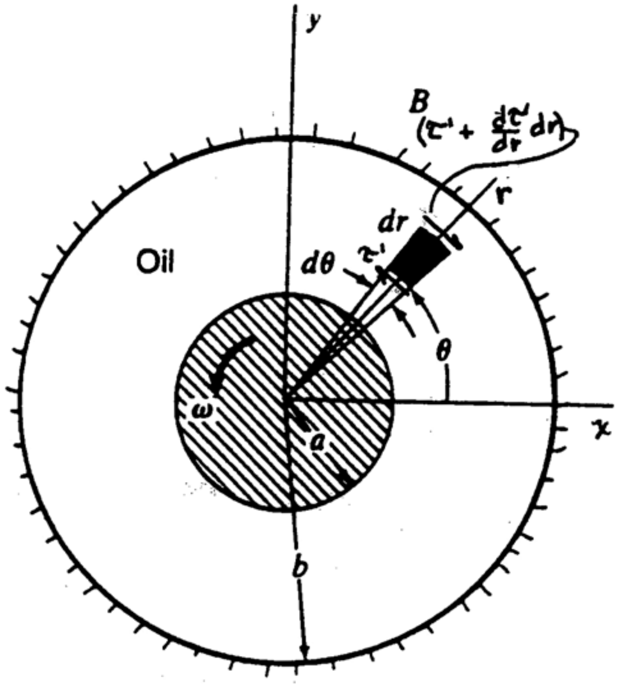


We start by integrating the given equation to get

$$\frac{d\upsilon_\theta}{dr} + \frac{\upsilon_\theta}{r} = 2C_1$$

Hence,

$$\frac{1}{r}\frac{d}{dr}(r\upsilon_\theta) = 2C_1$$

A second integration yields

$$\upsilon_\theta = C_1 r + C_2 / r$$

The boundary conditions are

$$\text{at } r = a, \quad \upsilon_\theta = \omega a \qquad \text{at } r = b \quad \upsilon_\theta = 0$$

The transverse velocity field is then given as

$$\upsilon_\theta = \frac{1}{b^2 - a^2} - a\omega r + \frac{a^2 b^2 \omega}{r}$$

where the boundary conditions are

at $r = a \quad \upsilon_\theta = a\omega$

at $r = b \qquad \upsilon_\theta = 0$

Hence the constants of integration are

$$C_1 = \omega + \frac{b^2}{a^2 - b^2}\omega \qquad\qquad C_2 = \frac{a^2 b^2}{a^2 - b^2}\omega$$

6.31

**NOTICE. Please add to the end of the problem statement the following :**

***Do this problem for the following hypothetical transverse velocity field:***

$$V_\theta = \frac{\omega a}{\ln(a/b)} \ln\left(\frac{r}{b}\right)$$

First we compute the torsional resistence per unit length along the axis on the rotating cylinder. Using ther notation $T_1$ , we get

$$T_1 = (\tau)(2\pi r_a)(1)(r_a) = -\mu\left(\frac{\partial V}{\partial r}\right)_{r_a}(2\pi r_a^2) = -\mu\left(\frac{\omega r_a}{\ln\frac{r_a}{r_b}}\right)\frac{1}{r_b}(2\pi r_a^2)$$

In the previous problem for the data $\omega = 0.1$ rad/s and $r_b = 0.1$ m, determine the largest value of $(r_b - r_a)$ in order that the linear profile approach presented in Chap. 1 gives a torsional resistance within 10% of the exact resistance for laminar flow.

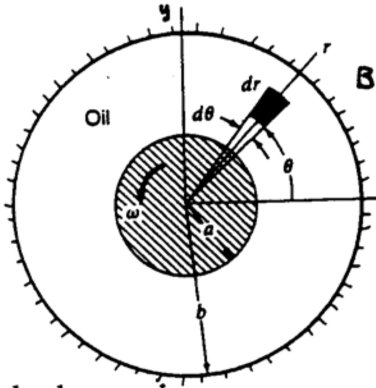


$$= -\frac{2\pi\mu\omega r_a^3}{\ln\left(\frac{r_a}{r_b}\right)r_b} = \frac{2\pi\mu\omega r_a^3}{\ln\left(\frac{r_b}{r_a}\right)r_b}$$

Let $r_a = \alpha r_b$

$$T_1 = \frac{2\mu\pi\omega\alpha^3 r_b^3}{\ln\left(\frac{\alpha r_b}{r_b}\right)^{-1} r_b} = \frac{2\pi\mu\omega r_b^2\alpha^3}{-\ln\alpha}$$

Next get the linear profile torque $T_2$ per unit length along axis.

$$T_2 = (\tau)(2\pi r_a)(1)r_a = \mu\left(\frac{\omega r_a}{r_b - r_a}\right)2\pi r_a^2 = \frac{\mu\omega\alpha^3 r_b^2(2\pi)}{(1-\alpha)}$$

Let $\left|\frac{T_2 - T_1}{T_1}\right| = .10$

$$\therefore \quad \frac{\frac{\mu\omega\alpha^3 r_b^2 2\pi}{(1-\alpha)} + \frac{2\pi\mu\omega r_b^2\alpha^3}{\ln\alpha}}{\frac{2\pi\mu\omega r_b^2\alpha^3}{-\ln\alpha}} = .10$$

$$-\frac{\ln\alpha}{1-\alpha} - 1 = .10 \qquad -\frac{\ln\alpha}{1-\alpha} = 1.10$$

Solve by trial and error or on programming calculator. $\alpha = .809$

$$\therefore \quad r_a = \alpha r_b = .809 r_b$$

$$r_b - r_a = (1-\alpha)r_b = .1910 r_b$$

$$r_b - r_a = (.1910)(.1) = \boxed{.01910 \ m}$$

http://ingesolucionarios.blogspot.com

6.32

In Problem 6.30 develop the differential equation for the pressure as the dependent variable and $r$ as independent variable. Do not try to solve analytically. The equation is nonlinear and must be solved numerically. Use $v_\theta$ of Problem 6.30.

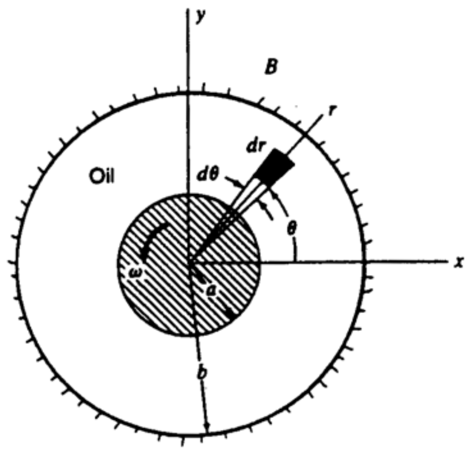


Newton's Law in Radial Direction:

$$-2\left(p+\frac{dp}{dr}\frac{dr}{2}\right)(dr)(1)\sin\left(\frac{d\theta}{2}\right)+pr\,d\theta\,(1)-\left(p+\frac{dp}{dr}dr\right)(r+dr)(d\theta)(1)=\frac{V^2}{r}r\,d\theta\,dr\,(1)(\rho)$$

$$\sin\frac{d\theta}{2}=\frac{d\theta}{2}$$

$$-pdr\,d\theta-\frac{dp}{dr}\frac{dr}{2}dr\,d\theta+pr\,d\theta-pr\,d\theta-pdr\,d\theta-\frac{dp}{dr}dr\,r\,d\theta-\frac{dp}{dr}dr\,dr\,d\theta=\rho\frac{V^2}{r}r\,d\theta\,dr$$

Cancel terms and delete higher-order terms:

$$r\frac{dp}{dr}d\theta\,dr=V^2\rho\,d\theta\,dr$$

$$\therefore\quad r\frac{dp}{dr}=\rho V^2 \qquad (1)$$

Replace $V$ from Prob. 6.30.

$$r\frac{dp}{dr}+\rho\left[\frac{1}{b^2-a^2}-a\omega r+\frac{a^2b^2\omega}{r}\right]^2=0$$


http://ingesolucionarios.blogspot.com Edu_Zegarr_ch

6.33

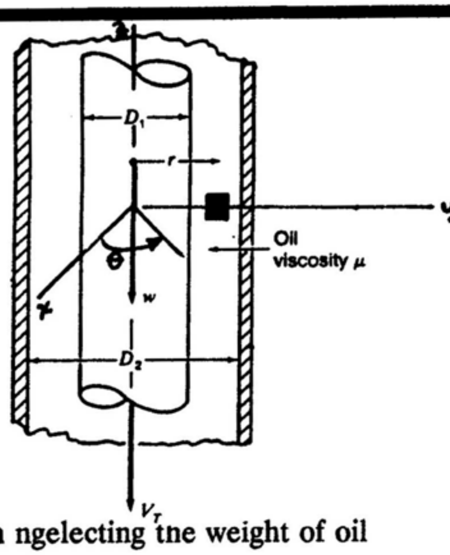


A vertical shaft weighing $w$ per unit length is sliding down concentrically inside a pipe [illegible]. Oil separates the two members. Determine the terminal velocity $V_T$ of the shaft without the linear profile assumption made in Chap. 1. Neglect the weight of oil.

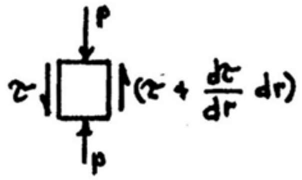


**Equilibrium** ngelecting tne weight of oil

$$-\tau(rd\theta)(dz) + \left(\tau + \frac{d\tau}{dr}dr\right)(r+dr)d\theta\, dz = 0$$

$$-\tau r\, d\theta\, dz + \tau r\, d\theta\, dz + \tau dr\, d\theta\, dz + \frac{d\tau}{dr} r\, dr\, d\theta\, dz + \frac{d\tau}{dr} dr\, dr\, d\theta\, dz = 0$$

$$\tau = -r\frac{d\tau}{dr} \qquad \frac{d\tau}{\tau} = -\frac{dr}{r}$$

$$\ln\tau = -\ln r + \ln C_1 = \ln\left(\frac{C_1}{r}\right) \qquad \tau = \frac{C_1}{r}$$

Use **Newton's viscosity law**

$$\mu\frac{dV}{dr} = \frac{C_1}{r} \qquad \mu dV = C_1\frac{dr}{r} \qquad V = \frac{C_1}{\mu}\ln r + C_2$$

when
$$\begin{cases} r = \dfrac{D_1}{2} & V = -V_T \\ r = \dfrac{D_2}{2} & V = 0 \end{cases}$$

$$-V_T = \frac{C_1}{\mu}\ln\frac{D_1}{2} + C_2$$

$$0 = \frac{C_1}{\mu}\ln\frac{D_2}{2} + C_2$$

**(cont.)**

**Subtract:**

$$\frac{C_1}{\mu}\left[\ln\left(\frac{D_1}{2}\right) - \ln\left(\frac{D_2}{2}\right)\right] = -V_T$$

$$\therefore \quad \frac{C_1}{\mu}\left[\ln D_1 - \ln 2 - \ln D_2 + \ln 2\right] = -V_T$$

$$\frac{C_1}{\mu}\ln\left(\frac{D_1}{D_2}\right) = -V_T \qquad C_1 = \frac{\mu V_T}{\ln\left(\frac{D_2}{D_1}\right)}$$

$$C_2 = -\frac{C_1}{\mu}\ln\frac{D_2}{2} = -\frac{\mu V_T}{\ln\left(\frac{D_2}{D_1}\right)}\frac{\ln\left(\frac{D_2}{2}\right)}{\mu} = \frac{V_T \ln\left(\frac{D_2}{2}\right)}{\ln\left(\frac{D_1}{D_2}\right)}$$

Find $V_T$ for shaft.

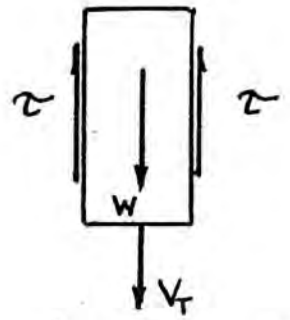


**Equilibruim**

$$w = \left(2\pi\,\frac{D_1}{2}\right)\tau = \pi D_2\,\frac{C_1}{\left(\frac{D_1}{2}\right)} = 2\pi C_1 = \frac{(2\pi)\mu V_T}{\ln\left(\frac{D_2}{D_1}\right)}$$

$$\boxed{V_T = \frac{w\ln\left(\frac{D_2}{D_1}\right)}{2\pi\mu}}$$

6.34

For "exact" case:

$$(V_T)_1 = \frac{w \ln\left(\frac{D_2}{D_1}\right)}{2\pi\mu} \quad (1)$$

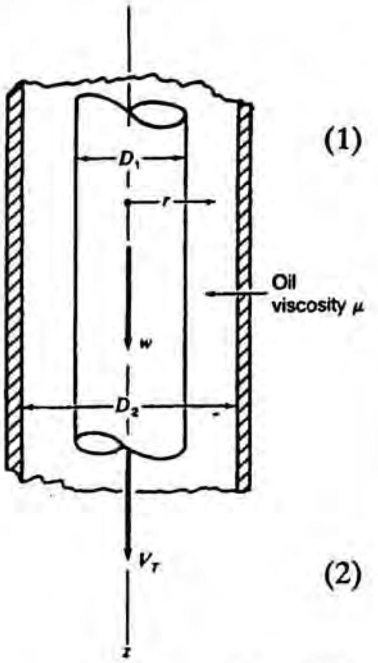


In Prob. got for the terminal velocity the result

$$V_T = \frac{w \ln(D_2/D_1)}{2\pi\mu}$$

If $D_1 = 200$ mm and $D_2 = 210$ mm, what is the error by computing $V_T$ using a thin-film linear profile approach as we did in Chap. 1. Take $w = 100$ N/m.

For linear profile case:

From equilibrium

$$-w + 2\left(\frac{V_T}{D_2 - D_1}\right)\mu(\pi D_1) = 0$$

$$(V_T)_2 = \frac{(D_2 - D_1)w}{2\pi D_1 \mu} \quad (2)$$

Let

$$\left[\frac{(V_T)_2 - (V_T)_1}{V_{T_1}}\right] = \frac{\alpha}{100}$$

$$\frac{\frac{(D_2 - D_1)w}{2\pi\mu D_1} - w\ln\left(\frac{D_2}{D_1}\right)\frac{1}{2\pi\mu}}{w\ln\left(\frac{D_2}{D_1}\right)\frac{1}{2\pi\mu}} = \frac{\alpha}{100}$$

$$\frac{\frac{.210 - .200}{.200} - \ln\left(\frac{.210}{.200}\right)}{\ln\left(\frac{.210}{.200}\right)} = \frac{\alpha}{100}$$

$$\left(\frac{.05 - .04879}{.04879}\right)(100) = \alpha = 2.48$$

$\therefore$ **error is 2.48%**

6.34

6.35

Using Fig. 6.16 derive Eqs. 6.70) from Newton's law.

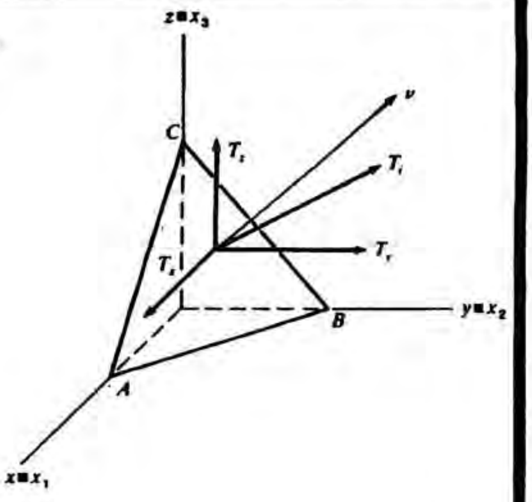


Projecting areas we have (see Sec. 2.5)

$$\overline{OCB} = \overline{ABC}\, a_{nx}$$

$$\overline{OAB} = \overline{ABC}\, a_{nz} \qquad \text{(a)}$$

$$\overline{OCA} = \overline{ABC}\, a_{ny}$$

where $a_{nx}$, $a_{ny}$ and $a_{nz}$ are direction cosines of $\nu$. Using **equilibrium** in the $x$, $y$ and $z$ directions, we can say

$$T_x\overline{ABC} - \tau_{xx}\,|\overline{OCB}| - \tau_{xy}\,|\overline{OCA}| - \tau_{xz}\,|\overline{OAB}| = 0$$

$$T_y\overline{ABC} - \tau_{yx}\,|\overline{OCB}| - \tau_{yy}|\overline{OCA}| - \tau_{yz}\,|\overline{OAB}| = 0$$

$$T_z\overline{ABC} - \tau_{zx}\,|\overline{OCB}| - \tau_{zy}\,|\overline{OCA}| - \tau_{zz}\,|\overline{OAB}| = 0$$

Note we have used the complementary property of shear stress and have dropped body force contributions as second order.

Now replace the area projections using Eqs. (a). Thus, on rearranging terms we get

$$T_x\overline{ABC} = \tau_{xx}\overline{ABC}\, a_{nx} + \tau_{xy}\overline{ABC}\, a_{ny} + \tau_{xz}\overline{ABC}\, a_{nz}$$

$$T_y\overline{ABC} = \tau_{yx}\overline{ABC}\, a_{nx} + \tau_{yy}\overline{ABC}\, a_{ny} + \tau_{yz}\overline{ABC}\, a_{nz}$$

$$T_z\overline{ABC} = \tau_{zx}\overline{ABC}\, a_{nx} + \tau_{zy}\overline{ABC}\, a_{ny} + \tau_{zz}\overline{ABC}\, a_{nz}$$

Divide by $\overline{ABC}$ and replace subscript $a_{nx}$ by $\nu_x$, $a_{ny}$ by $\nu_y$ and $a_{nz}$ by $\nu_z$. We then get Eq. (6.70) as requested.

http://ingesolucionarios.blogspot.com

# CHAPTER 7

http://ingesolucionarios.blogspot.com
Edu_Zegarr_ch

http://ingesolucionarios.blogspot.com

7.1 Weber number $\rho V^2 L/\sigma$

$\rho$ = *density* = $M/L^3$

$V$ = *velocity* = $L/T$

$L$ = *length* = $L$

$\sigma$ = *surface tension* = $F/L$

$$\therefore \quad \left(\frac{\rho V^2 L}{\sigma}\right) = \frac{\left(\frac{M}{L^3}\right)\left(\frac{L}{T}\right)^2 L}{\left(\frac{F}{L}\right)} = \left(\frac{ML}{FT^2}\right)$$

But from **Newton's** law:

$$(F) = \left(M\frac{L}{T^2}\right)$$

$$\therefore \quad \boxed{\left(\frac{\rho V^2 L}{\sigma}\right) = 1}$$

7.2

$$P_r = \frac{c_p \mu}{k}$$

Dimension of $k$ should be the same as $c_p\mu$ .

a) $MLT\theta$ system.

$$(c_p) = \frac{(FL)}{(M)(\theta)} = \frac{\left(\frac{ML}{T^2}\right)(L)}{(M)(\theta)} = \left(\frac{L^2}{T^2\theta}\right)$$

$$(\mu) = \left(\frac{M}{LT}\right)$$

$$\boxed{(k) = \left(\frac{ML}{T^3\theta}\right)}$$

b) $FLT\theta$ system.

$$(k) = \left(\frac{ML}{T^3\theta}\right) = \left(\frac{FT^2}{L}\right)\left(\frac{L}{T^3\theta}\right) = \boxed{\left(\frac{F}{T\theta}\right)}$$

http://ingesolucionarios.blogspot.com
Edu_Zegarr_ch

7.3

In Chap. 12, we will be introduced to the so-called shear velocity $\tau_*$ defined as

$$\tau_* = \sqrt{\tau_w/\rho}$$

where $\tau_w$ is the shear stress at the wall. Show that $\tau_*$ has the dimensions of a velocity—hence its name.

$$\tau_* = \sqrt{\frac{\tau_W}{\rho}} \rightarrow \left(\frac{\frac{F}{L^2}}{\frac{M}{L^3}}\right)$$

Use Newton's law to replace $F$.

$$\left(\frac{\frac{F}{L^2}}{\frac{M}{L^3}}\right) = \frac{\frac{\left(\frac{ML}{T^2}\right)}{L^2}}{\frac{M}{L^3}} = \left(\frac{L^2}{T^2}\right) = (V^2)$$

When we take the root we get $V$. Thus $\tau_*$ has dimensions of velocity.

---

7.4 Use $FL\theta T$

In heat transfer the heat *convection coefficient h* is defined as the wall heat flux (energy per unit time per unit area) divided by the difference between the wall temperature and average temperature of the fluid at the wall. The *Stanton* number St is a useful dimensionless group defined as

$$St = \frac{h}{\rho c_p V}$$

Show that it is dimensionless.

$$\frac{h}{\rho c_p V} = \frac{\frac{FL}{TL^2\theta}}{\left(\frac{FT^2/L}{L^3}\right)\left(\frac{FL}{\theta\left(\frac{FT^2}{L}\right)}\right)\left(\frac{L}{T}\right)} = [1]$$

∴ Dimensionless.

---

7.5 Use $ML\theta T$ system:

The *Grashof* number Gr is used in bouyancy induced flows where temperature is nonuniform and is defined as

$$Gr = \frac{g\beta L^3 t}{\nu^2}$$

where $\beta$ is the thermal expansion coefficient defined as the change in volume per unit volume per unit temperature and $t$ is temperature. Show that the Grashof number is dimensionless.

$$[G_r] = \frac{g\beta L^3 T}{\nu^2} = \frac{\left(\frac{L}{T^2}\right)\left(\frac{L^3/L^3}{\theta}\right)L^3\theta}{\left(\frac{L^2}{T}\right)^2} = [1]$$

∴ $G_r$ is dimensionless.

http://ingesolucionarios.blogspot.com

7.6

What is the rank of the following dimensional matrix? What are the dimensions of $\alpha$, $\beta$, $\gamma$, and $\delta$?

| | $\alpha$ | $\beta$ | $\gamma$ | $\delta$ |
|---|---|---|---|---|
| $M$ | 1 | 0 | 1 | 0 |
| $L$ | 2 | 1 | −1 | 1 |
| $T$ | −1 | 2 | −1 | 0 |

Look at a 3×3

$$\begin{vmatrix} 1 & 0 & 1 \\ 2 & 1 & -1 \\ -1 & 2 & -1 \end{vmatrix} = -1+4+0+1+2+0 = 6$$

$$\therefore \boxed{r=3}$$

$$(\alpha) = \left(\frac{ML^2}{T}\right) \qquad (\beta) = (LT^2) \qquad (\gamma) = \left(\frac{M}{LT}\right) \qquad (\delta) = (L)$$

7.7

Consider a mass on a weightless, frictionless spring. The spring constant is $K$, and the position of the body of mass $M$ is measured by the displacement $x$ from the position of static equilibrium. In ascertaining the amplitude of vibration $A$ on such a system resulting from a harmonic disturbance, we know that the following variables are involved:

$A$ = amplitude of vibration
$M$ = mass of body
$K$ = spring constant
$F_0$ = amplitude of disturbance
$\omega$ = frequency of disturbance

Assume that this problem cannot be handled theoretically but must be done experimentally.

(a) Explain how you would carry out an experimental program without the use of dimensional analysis.
(b) Form two independent dimensionless groups by trial and error, and then explain how you would carry out your experiments.

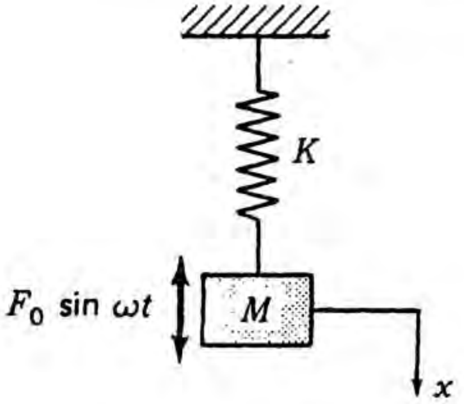


a) You would select a mass $M$ and for different

1) forces $F_0$
2) springs $K$
3) frequencies $\omega$

You would measure the amplitude $A$. You would do this whole procedure for different masses $M$ accumulating charts of:

$A$ vs. $F_0$ , $\omega$ , holding $M$ and $K$
$A$ vs. $F_0$ and $M$ , holding $\omega$ and $K$
$A$ vs. $F_0$ , $K$ , holding $\omega$ and $M$

etc.

http://ingesolucionarios.blogspot.com

**(cont.)**

**b)** Two dimensionless groups are

$$\pi_1 = \frac{M\omega^2}{K}$$

$$\pi_2 = \frac{A\omega^2 M}{F_0}$$

The motion is characterized by the relation:

$$\boxed{\frac{M\omega^2}{K} = f\left(\frac{A\omega^2 M}{F_0}\right)}$$

where $f$ is a function to be determined by experiment. For a given spring, mass and frequency, vary $F_0$ and measure $A$. In this way a relation between the two $\pi$'s can be found quite simply. A single curve then suffices.

7.8

The maximum pitching moment that is developed by the water on a flying boat as it lands is noted as $C_{max}$. The following are the variables that are involved in this action:
$\alpha$ = angle made by flight path of plane with horizontal
$\beta$ = angle defining attitude of plane
$M$ = mass of plane
$L$ = length of hull
$\rho$ = density of water
$g$ = acceleration of gravity
$R$ = radius of gyration of plane about axis of pitching
According to Buckingham's $\pi$ theorem, how many independent dimensionless groups should there be which characterize this problem?

$$C_{max} = f(\alpha, \beta, M, L, \rho, g, R)$$

Thus $n = 8$. The basic dimensions are 3 in number

$$\boxed{8 - 3 = 5 \ \ groups}$$

7.9

The power required to drive a propeller is known to depend on
$D$ = diameter of propeller
$\rho$ = density of fluid
$c$ = velocity of sound in fluid
$\omega$ = angular velocity of propeller
$V$ = free-stream velocity
$\mu$ = viscosity of fluid
According to Buckingham's $\pi$ theorem, how many dimensionless groups characterize this problem?

$$Power = f(D, \rho, c, \omega, V, \mu)$$

$$n = 7$$

The basic dimensions number.

$\therefore$ $7 - 3 = 4$ dimensionless groups for this problem.

http://ingesolucionarios.blogspot.com

What are the dimensional matrices for Probs. 7.8 and 7.9? What are the ranks of these matrices?

7.10 a) Refer to problem 8.8

$$(\alpha) = (1)$$

$$(\beta) = (1)$$

$$(M) = (M)$$

$$(L) = (L)$$

$$(\rho) = (ML^{-3})$$

$$(g) = (LT^{-2})$$

$$(R) = (L)$$

$$(C_x) = (L)(F) = (L^2)\left(\frac{M}{T^2}\right)$$

We now formulate the dimensional matrix.

| | α | β | M | L | ρ | g | R | $C_x$ |
|---|---|---|---|---|---|---|---|---|
| M | 0 | 0 | 1 | 0 | 1 | 0 | 0 | 1 |
| L | 0 | 0 | 0 | 1 | -3 | 1 | 1 | 2 |
| T | 0 | 0 | 0 | 0 | 0 | -2 | 0 | -2 |

The largest non-zero matrix is a 3×3 which gives the matrix a rank 3 .

b) Refer to problem 8.9

$$(D) = (L)$$

$$(\rho) = (M/L^3)$$

$$(c) = (L/T)$$

$$(\omega) = 1/T$$

$$(V) = (L/T)$$

$$(\mu) = (M/LT)$$

$$(P) = \left(\frac{FL}{T}\right) = (ML^2/T^3)$$

| | D | ρ | c | ω | V | μ | P |
|---|---|---|---|---|---|---|---|
| M | 0 | 1 | 0 | 0 | 0 | 1 | 1 |
| L | 1 | -3 | 1 | 0 | 1 | -1 | 2 |
| T | 0 | 0 | -1 | -1 | -1 | -1 | -3 |

The rank of this matrix is 3 .

http://ingesolucionarios.blogspot.com Edu_Zegarr_ch

http://ingesolucionarios.blogspot.com

Consider a freely falling body near the earth's surface. The time $t$ of descent we believe depends on the height $h$ of the fall, the weight $w$, and the gravitational acceleration $g$. What is the minimal experimentation to find the time $t$? Take $g$ as a constant.

7.11

$$t = f(h, W, g) \qquad t = K[h^a W^b g^c] + \ldots$$

Dimensionally, $$(T) = (L)^a (F)^b \left(\frac{L}{T^2}\right)^c$$

Enforce dimensional homogeneity:
$$\begin{cases} T: & 1 = -2c \\ F: & 0 = b \\ L: & 0 = a + c \end{cases} \quad \therefore \quad \begin{cases} c = -\frac{1}{2} \\ b = 0 \\ a = \frac{1}{2} \end{cases}$$

$$t = K\left[\left(h^{\frac{1}{2}}\right)(1)\left(g^{-\frac{1}{2}}\right)\right] + \ldots$$

$\left[t\left(\frac{g}{h}\right)^{\frac{1}{2}}\right]$ characterizes problem. Carry out experiments using different values of $h$. We find that

$$t\sqrt{\frac{g}{h}} = \sqrt{2} \qquad h = \frac{1}{2}gt^2$$

And we have our familiar formulas from high school days.

http://ingesolucionarios.blogspot.com

7.12

The period $\tau$ of oscillation for a pendulum is known to depend on $l$, the length of the pendulum, its mass $m$, and gravitational acceleration $g$. How close can you come to the well-known formula

$$\tau = 2\pi\sqrt{l/g}$$

by dimensional analysis?

$$\tau = f(\ell, g, m) \qquad \tau = K\left[\ell^a g^b m^c\right] + \ldots$$

Dimensionally, $$T = \left[L^a\left(\frac{L}{T^2}\right)^b M^c\right]$$

Enforce dimensional homogeneity.

$$\begin{aligned} T:&\quad 1 = -2b \\ L:&\quad 0 = a + b \\ M:&\quad 0 = c \end{aligned} \qquad \therefore \begin{cases} b = -\dfrac{1}{2} \\ a = \dfrac{1}{2} \\ c = 0 \end{cases} \qquad \tau = K\left[\ell^{\frac{1}{2}} g^{-\frac{1}{2}} m^0\right] + \ldots$$

$$\boxed{f\left[\tau\sqrt{\frac{g}{\ell}}\right] = 0}$$

Go back to formula given.

$$\tau = 2\pi\sqrt{\frac{\ell}{g}} \qquad \therefore \quad \boxed{\tau\sqrt{\frac{g}{\ell}} = 2\pi}$$

http://ingesolucionarios.blogspot.com

7.13

In Sec. 7.5, we used the *MLT* system of basic dimensions for pressure drop in a pipe. Now carry out the development using the *FLT* system of basic dimensions. If you don't get the same π's as in Sec. 8.5, manipulate π's algebraically until you do.

$$\Delta p = h(\rho, \mu, V, L, D, e)$$

$$\left[\frac{F}{L^2}\right] = \left[\left(\frac{\frac{FT^2}{L}}{L^3}\right)^a \left(\frac{FT}{L^2}\right)^b \left(\frac{L}{T}\right)^c (L)^d (L)^e (L)^f\right]$$

$$\therefore \quad \left[\frac{F}{L^2}\right] = \left[\left(\frac{FT^2}{L^4}\right)^a \left(\frac{FT}{L^2}\right)^b \left(\frac{L}{T}\right)^c (L)^d (L)^e (L)^f\right]$$

Enforce **dimensional homogeneity.**

$$\begin{cases} F & 1 = a + b \\ L & -2 = -4a - 2b + c + d + e + f \\ T & 0 = 2a + b - c \end{cases}$$

Get $a$, $c$ and $f$ in terms of $b$, $e$, $d$.

$$a = 1 - b$$

$$c = 2a + b = (1-b)(2) + b = (2-b)$$

$$f = -2 + 4(1-b) + 2b - (2-b) - d - e = -b - d - e$$

$$\therefore \quad [\Delta p] = K_1[(\rho^{1-b})(\mu^b)V^{(2-b)}(L)^d(D^e)(e)^{-b-d-e}] + \ldots$$

$$\left[\frac{\Delta p}{\rho V^2}\right] = K_1\left[\left(\frac{\mu}{\rho V e}\right)^b \left(\frac{L}{e}\right)^d \left(\frac{D}{e}\right)^e\right] + \ldots$$

http://ingesolucionarios.blogspot.com

(cont.)

$$\therefore \left[\frac{\Delta p}{\rho V^2}\right] = h\left[\left(\frac{\mu}{\rho V e}\right)\left(\frac{L}{e}\right)\left(\frac{D}{e}\right)\right]$$

$$\pi_1 \qquad \pi_2 \quad \pi_3 \quad \pi_4$$

Take

$$\pi_3 \times \frac{1}{\pi_4} = \left(\frac{\mu}{\rho V e}\right)\left(\frac{e}{D}\right) = \frac{\mu}{\rho V D}$$

Let
$$\left(\pi_2 \times \frac{1}{\pi_4}\right)^{-1} = \pi_2' = \left(\frac{\rho V D}{\mu}\right)$$

Take
$$\pi_2 \times \frac{1}{\pi_4} = \left(\frac{L}{e}\right)\left(\frac{e}{D}\right) = \left(\frac{L}{D}\right)$$

Let $\pi_3' = \dfrac{L}{D}$ Let $\pi_4' = (\pi_4)^{-1} = \left(\dfrac{e}{D}\right)$

We then have:

$$\left(\frac{\Delta p}{\rho V^2}\right) = h\left[(Re), \left(\frac{L}{D}\right), \left(\frac{e}{D}\right)\right]$$

http://ingesolucionarios.blogspot.com Edu_Zegarr_ch

http://ingesolucionarios.blogspot.com

By a formal procedure, evaluate a set of dimensionless groups for Prob. 7.7.

7.14

$$A = (L)$$

$$M = (M)$$

$$K = (F/L) = (M/T^2)$$

$$F_0 = (F) = (ML/T^2)$$

$$\omega = (T^{-1})$$

$$A = f(M, K, F_0, \omega)$$

Express as a power series, considering dimensionally only one term of the series. Thus:

$$(L) = (M)^a (MT^{-2})^b (MLT^{-2})^c (T^{-1})^d$$

**Dimensional homogeneity** requires that for

$$\begin{cases} (M) & 0 = a + b + c \\ (L) & 1 = c \\ (T) & 0 = -2b - 2c - d \end{cases}$$

Solving for $a$ and $d$ in terms of $b$ we have:

$$a = -b - c = -b - 1$$

$$d = -2b - 2$$

Thus:

$$(A) = K_1[(M)^{-b-1}(K)^b(F_0)^1(\omega)^{-2b-2}] + \ldots$$

Rearranging we have:

$$\left(\frac{MA\omega^2}{F_0}\right) = f\left(\frac{K}{\omega^2 M}\right)$$

http://ingesolucionarios.blogspot.com Edu_Zegarr_ch 

http://ingesolucionarios.blogspot.com

7.15

Determine a set of dimensionless groups for Prob. 7.8.

$$C_x = f(\alpha,\beta,M,L,\rho,g,R)$$

Hence:

$$C_x = K_1(\alpha)^a(\beta)^b(M)^c(L)^d(\rho)^e(g)^f(R)^h] + ...$$

Dimensionally we require

$$\left(\frac{ML^2}{T^2}\right) = (1)^a(1)^b(M)^c(L)^d(ML^{-3})^e(LT^{-2})^f(L)^h$$

For **dimensional homogeneity** we require next:

$$\begin{cases} (M) & 1 = c + e \\ (L) & 2 = d - 3e + f + h \\ (t) & -2 = -2f \end{cases}$$

Clearly $a$ and $b$ are not restricted. We see that $f=1$ and solving for $c$ and $d$ in terms of $h$ and $e$ we get:

$$c = 1 - e$$

$$d = 2 + 3e - 1 - h = 3e - h + 1$$

$$C_x = K_1[(\alpha)^a(\beta)^b(M)^{1-e}(L)^{3e-h+1}(\rho)^e(g)^1(R)^h] + ...$$

$$\left(\frac{C_x}{MLg}\right) = f\left[\alpha, \beta, \frac{L^3\rho}{M}, \frac{R}{L}\right]$$

$$\therefore \quad \boxed{\left(\frac{C_x}{MLg}\right) = f\left[(\alpha), (\beta), \left(\frac{L^3\rho}{M}\right), \frac{R}{L}\right]}$$

http://ingesolucionarios.blogspot.com



Determine a set of dimensionless groups for Prob. 7.9. Adjust your $\pi$'s by algebra to get

$$\frac{P}{D^5\rho\omega^3} = f\left(\text{Re}, \text{M}, \frac{D\omega}{c}\right)$$

$$P = f(D,\rho,c,\omega,V,\mu)$$

$$\therefore \quad P = K_1(D^a,\rho^b,c^c,\omega^d,V^e,\mu^f) + \dots$$

$$\therefore \quad \left(\frac{FL}{T}\right) = (L)^a(ML^{-3})^b(LT^{-1})^c(T^{-1})^d(LT^{-1})^e(ML^{-1}T^{-1})^f$$

Using $MLT$ system this becomes

$$\left(\frac{ML^2}{T^3}\right) = (L)^a(ML^{-3})^b(LT^{-1})^c(T^{-1})^d(LT^{-1})^e(ML^{-1}T^{-1})^f$$

Impose **dimensional homogeneity**

$$\begin{cases} (M) & 1 = b + f \\ (L) & 2 = a - 3b + c + e - f \\ (T) & -3 = -c - d - e - f \end{cases}$$

Solve for $a$, $b$, $d$ in terms of $f$, $c$ and $e$

$$b = 1 - f$$

$$a = 2 + 3(1-f) - c - e + f = 5 - 2f - c - e$$

$$d = 3 - c - e - f$$

We then have:

$$P = K_1[(D)^{(5-2f-c-e)}\rho^{(1-f)}c^c\omega^{(3-c-e-f)}V^e\mu^f] + \dots$$

$$PD^{-5}\rho^{-1}\omega^{-3} = K_1\{[D^{-2}\rho^{-1}\omega^{-1}\mu]^f[D^{-1}c\omega^{-1}]^c[D^{-1}\omega^{-1}V]^e\}$$

http://ingesolucionarios.blogspot.com

**(cont.)**

$$\therefore \quad \frac{P}{D^5 \rho \omega^3} = f\left[\left(\frac{\mu}{D^2 \rho \omega}\right), \left(\frac{c}{D\omega}\right), \left(\frac{V}{D\omega}\right)\right]$$

A better set of terms in uncoupled form is now presented.

$$\pi_1 = f(\pi_2, \pi_3, \pi_4)$$

Take $\quad \pi_4 \times \frac{1}{\pi_3} = \left(\frac{V}{D\omega}\right)\left(\frac{D\omega}{c}\right) = \left(\frac{V}{c}\right) = M$

Take $\quad \pi_3^{-1} = \left(\frac{c}{D\omega}\right)^{-1} = \left(\frac{D\omega}{c}\right)$

Take $\quad \frac{1}{\pi_2} \times \pi_4 = \left(\frac{D^2 \rho \omega}{\mu}\right)\left(\frac{V}{D\omega}\right) = \left(\frac{\rho V D}{\mu}\right) = Re$

$$\therefore \quad \boxed{\left(\frac{P}{D^5 \rho \omega^3}\right) = f\left(Re, M, \frac{D\omega}{c}\right)}$$

http://ingesolucionarios.blogspot.com

7.17

In strength of materials, you learned that the shear stress in a rod under torsion is given as

$$\tau = \frac{M_x r}{J} \qquad (a)$$

where $M_x$ is the torque, and $J$ is the polar moment of area of the cross section. We can give the formula above in dimensionless form as follows:

$$\left(\frac{\tau r^3}{M_x}\right) = \left(\frac{r^4}{J}\right) \qquad (b)$$

How close to this formula can you get by dimensional analysis? Use the *FLT* system of basic dimensions.

| | $\tau$ | $M_x$ | r | J |
|---|---|---|---|---|
| F | 1 | 1 | 0 | 0 |
| L | -2 | 1 | 1 | 4 |
| T | 0 | 0 | 0 | 0 |

The rank of the matrix is 2 .

$$\begin{vmatrix} 1 & 0 \\ 1 & 1 \end{vmatrix} \neq 0$$

or

$$\begin{vmatrix} 1 & 1 \\ -2 & 1 \end{vmatrix} \neq 0$$

etc.

There are only 2 dimensionless groups. We now find them.

$$\tau = f(M_x, r, J)$$

$$\tau = K_1[(M_x)^{a_1}(r)^{b_1}(J)^{c_1}] + \ldots$$

$$\left(\frac{F}{L^2}\right) = K_1[(FL)^a(L)^b(L^4)^c]$$

Impose **dimensional homogeneity.**

http://ingesolucionarios.blogspot.com Edu_Zegarr_ch

http://ingesolucionarios.blogspot.com

**(cont.)**

$$\begin{cases} F & 1 = a \\ L & -2 = a + b + 4c \\ T & 0 = 0 \end{cases}$$

Let $a$ and $b$ be determined in terms of $c$

$$a = 1$$

$$b = -2 - 1 - 4c = -3 - 4c$$

$$\tau = K_1[(M_x)^1(r)^{-3-4c}(J)^c] + \ldots$$

$$\left(\frac{\tau r^3}{M_x}\right) = f\left(\frac{J}{r^4}\right)$$

$$\pi_1 \qquad \pi_2$$

Now this is as far as we can get. The function $f$ actually turns out to be unity from any experiment on a torsion specimen.

http://ingesolucionarios.blogspot.com Edu_Zegarr_ch 

http://ingesolucionarios.blogspot.com

7.18

Do Example 7.1 using the *MLT* system of basic dimensions.

$$\delta = f(P,L,E,I)$$

$$\delta = K_1[(P)^{a_1}(L)^{b_1}(E)^{c_1}(1)^{d_1}] + \ldots$$

$$[L] = \left[\frac{ML}{T^2}\right]^a [L]^b \left[\frac{ML}{T^2L^2}\right]^c [L^4]^d = \left[\frac{ML}{T^2}\right]^a [L]^b \left[\frac{M}{LT^2}\right]^d [L^4]^d$$

Enforce **dimensional homogeneity.**

$$\begin{cases} M & 0 = a + c \\ L & 1 = a + b - c + 4d \\ T & 0 = -2a - 2c \end{cases}$$

$$\therefore \begin{cases} a = -c \\ b = 1 + c + c - 4d = 1 + 2c - 4d \end{cases}$$

$$\therefore \quad \delta = K_1[(P)^{-c_1}(L^{1+2c_1-4d_1})(E)^{c_1}(I)^{d_1}] + \ldots$$

$$\left(\frac{\delta}{L}\right) = f\left\{\left(\frac{EL^2}{P}\right)\left(\frac{I}{L^4}\right)\right\}$$

Since only 2 groups multiply $\left(\frac{EL^2}{P}\right) \times \frac{I}{L^4}$

This becomes $\left(\frac{\delta}{L}\right) = g\left[\frac{EI}{PL^2}\right]$

Hence we can say

$$\boxed{\left(\frac{\delta}{L}\right) = h\left(\frac{PL^2}{EI}\right)}$$

http://ingesolucionarios.blogspot.com

7.19

A disc $A$ having a moment of inertia $I_{xx}$ is held by a light rod of length [illegible] The formula for free torsional oscillation of the disc is given as:

$$\theta = A \sin\sqrt{\frac{K_t}{I_{xx}}}\, t + B \cos\sqrt{\frac{K_t}{I_{xx}}}\, t$$

where $K_t$ is the equivalent torsional spring constant coming from the rod and has a value given as

$$K_t = \frac{GJ}{L}$$

where $G$ = shear modulus of the rod
$J$ = polar moment of area of the rod
$L$ = length of the rod

How close can you come to these results by using dimensional analysis?

$$\theta = f[(G),(J),(L),(T),(I_{xx})]$$

Since $\begin{cases} n = 6 \\ r = 3 \end{cases}$ get 3 groups. Use *FLT* sytstem.

$$\theta = K_1[(G)^{a_1}(J)^{b_1}(L)^{c_1}(T)^{d_1}(I_{xx})^{e_1}] + \ldots$$

$$\therefore \quad [0] = \left[\frac{F}{L^2}\right]^a [L^4]^b [L]^c [T]^d \left[\left(\frac{FT^2}{L}\right) L^2\right]^e$$

$$[0] = \left[\frac{F}{L^2}\right]^a [L^4]^b [L]^c [T]^d [FT^2 L]^e$$

Enforce **dimensional homogeneity.**

$$\begin{cases} F & 0 = a + e \\ L & 0 = -2a + 4b + c + e \\ T & 0 = d + 2e \end{cases}$$

$$\therefore \quad a = -e$$

$$d = -2e$$

$$c = -2e - 4b - e = -3e - 4b$$

http://ingesolucionarios.blogspot.com

**(cont.)**

$$\theta = K_1[(G)^{-e_1}(J)^{b_1}(L)^{-3e_1-4b_1}(T)^{-2e_1}(I_{xx})^{e_1}] + \ldots$$

$$\therefore \quad \theta = f\left[\left(\frac{I_{xx}}{GT^2L^3}\right),\left(\frac{J}{L^4}\right)\right]$$

$$\pi_1 \qquad \pi_2 \qquad \pi_3$$

Take $\pi_2 \times \frac{1}{\pi^3}$ . We get

$$\left(\frac{I_{xx}}{GT^2L^3}\right)\left(\frac{L^4}{J}\right) = \frac{I_{xx}L}{GJT^2}$$

$$\theta = h\left[\frac{I_{xx}L}{GJT^2}\right] = g\left[\frac{I_{xx}}{K_tT^2}\right]$$

$$\boxed{\theta = k\left[\sqrt{\frac{K_t}{I_{xx}}}\ T\right]}$$

http://ingesolucionarios.blogspot.com
7.20

. Experience dictates that the head $\Delta H_D$ developed by turbomachines depends on the following variables:
Diameter of rotor, $D$
Rotational speed, $N$
Volume flow through the machine, $Q$
Kinematic viscosity, $\nu$
Gravity, $g$
Show that

$$\frac{\Delta H_D}{D} = f\left(\frac{Q}{ND^3}, \frac{g}{N^2D}, \frac{ND^2}{\nu}\right)$$

$$(\Delta H)_D = f(D, N, Q, \nu, g)$$

$$(\Delta H)_D = K_1(D^{a_1})(N^{b_1})(Q^{c_1})(\nu^{d_1})(g^{e_1}) + \ldots$$

$$\therefore \quad [L] = [L]^a\left[\frac{1}{T}\right]^b\left[\frac{L^3}{T}\right]^c\left[\frac{L^2}{T}\right]^d\left[\frac{L}{T^2}\right]^e$$

Enforce **dimemensional homogeneity.**

$$\begin{cases} L & 1 = a + 3c + 2d + e \\ T & 0 = -b - c - d - 2e \end{cases}$$

$$\therefore \quad a = 1 - 3c - 2d - e$$

$$b = -c - d - 2e$$

$$(\Delta H)_D = K[(D)^{1-3c_1-2d_1-e_1}(N)^{-c_1-d_1-2e_1}(Q)^{c_1}(\nu)^{d_1}(g)^{e_1}] + \ldots$$

$$\left(\frac{(\Delta H)_D}{D}\right) = f\left[\left(\frac{Q}{D^3N}\right), \left(\frac{g}{D^2N}\right)\left(\frac{\nu}{DN^2}\right)\right]$$

$$\therefore \quad \frac{(\Delta H)_D}{D} = \bar{f}\left[\left(\frac{Q}{D^3N}\right), \left(\frac{g}{D^2N}\right), \left(\frac{ND^2}{\nu}\right)\right]$$

http://ingesolucionarios.blogspot.com
Edu_Zegarr_ch

7.21

The velocity of sound $c$ in a perfect gas is given as $c = \sqrt{kRT}$, where $k$ is the ratio of specific heats and hence dimensionless, and $T$ is the temperature. What can you learn about $c$ by using dimensional analysis only?

$$c = f(k, R, T)$$

$$c = K_1[(k^{a_1})(R^{b_1})(T)^{c_1}] + \ldots$$

$$[c] = [k]^a [R]^b [T]^c$$

Using $t$ for time and $T$ for temperature here

$$\left[\frac{L}{t}\right] = [1]^a \left[\frac{FL}{MT}\right]^b [T]^c$$

Go to $MLtT$ system.

$$\left[\frac{L}{t}\right] = [1]^a \left[\frac{\left(\frac{ML}{t^2}\right)(L)}{MT}\right]^b [T]^c = [1]^a \left[\frac{L^2}{Tt^2}\right]^b [T]^c$$

Enforce **dimensional homogeneity**

$$\begin{cases} L & 1 = 2b \\ t & -1 = -2b \\ T & 0 = -b + c \end{cases}$$

$$\therefore \quad b = \frac{1}{2} \qquad c = b = \frac{1}{2}$$

$$[c] = K_1[(k)^{a_1}(R)^{1/2}(T^{1/2})] + \ldots$$

$$\frac{c}{\sqrt{RT}} = f(k)$$

$$\therefore \quad c = [f(k)]\sqrt{RT}$$

We can show that $f(k) = \sqrt{k}$ when we go to study compressive flow in Chapter 11.

7.22

In the laminar flow of a viscous fluid through a capillary tube, the pressure drop over length $L$ is a function of the velocity, diameter, viscosity, and length. Determine the $\pi$'s involved. How close can you get to the formula $\Delta p = 32(V\mu/L)(L/D)^2$ to be derived in Chap. 8?

$$\Delta p = F(V, D, \mu, L)$$

$$[\Delta p] = K[(V^a)(D^b)(\mu)^c(L)^d] + \ldots$$

$$\left[\frac{F}{L^2}\right] = K_2\left[\left(\frac{L}{T}\right)^{a_1}(L)^{b_1}\left(\frac{FT}{L^2}\right)^{c_1}(L)^{d_1}\right]$$

Enforcing **dimensional homogeneity**

$$\begin{cases} F & 1 = c \\ L & -2 = a + b - 2c + d \\ T & 0 = -a + c \end{cases}$$

$$\therefore \quad c = 1$$

$$a = 1$$

$$d = -2 - 1 - b + 2 = -1 - b$$

$$\Delta p = K_1[(V)^1(D^{b_1})(\mu)^1(L)^{-1-b_1}] + \ldots$$

$$\therefore \quad \left(\frac{\Delta p L}{V\mu}\right) = f\left(\frac{L}{D}\right)$$

$$\therefore \quad \boxed{\Delta p = \left(\frac{V\mu}{L}\right) f\left(\frac{L}{D}\right)}$$

This is very close to the given formula.

http://ingesolucionarios.blogspot.com

7.23 A boat moving along the free surface has a drag $D$ which we know depends on the following variables:
$V$ = velocity
$L$ = length of boat
$\mu$ = viscosity
$g$ = gravity
$\rho$ = density
$B$ = beam or width of boat
Formulate the dimensionless groups involved. If you don't get the Reynolds number, Froude number, and Euler number, manipulate your $\pi$'s algebraically to get them.

$$D = f(V, L, \mu, g, \rho, B)$$

$$\left[\frac{ML}{T^2}\right] = K\left[\left(\frac{L}{T}\right)^a (L)^b \left(\frac{M}{LT}\right)^c \left(\frac{L}{T^2}\right)^d \left(\frac{M}{L^3}\right)^e (L)^f\right]$$

**Enforce dimensional homogeneity**

$$\begin{cases} M & 1 = c + e \\ L & 1 = a + b - c + d - 3e + f \\ T & -2 = -a - c - 2d \end{cases}$$

Use $c$ , $a$ , $b$ as independent.

$$e = 1 - c$$

$$d = 1 - \frac{a}{2} - \frac{c}{2}$$

$$f = 1 - a - b + c - \left(1 - \frac{a}{2} - \frac{c}{2}\right) + 3(1-c) = 3 - \frac{a}{2} - b - \frac{3}{2}c$$

$$D = K[(V^a)(L^b)(\mu^c)(g^{1 - \frac{a}{2} - \frac{c}{2}})(\rho^{1-c})(B^{3 - \frac{a}{2} - b - \frac{3}{2}c})]$$

$$\left[\frac{D}{\rho g B^3}\right] = f\left[\left(\frac{V}{\sqrt{g}\sqrt{B}}\right)\left(\frac{L}{B}\right)\left(\frac{\mu}{\rho\sqrt{g}\,B^{3/2}}\right)\right]$$

Multiply first $\pi$ in right hand side by reciprocal of third $\pi$ .

$$\frac{V}{\sqrt{g}\sqrt{B}} \times \frac{\rho\sqrt{g}\,B^{3/2}}{\mu} = \left[\frac{\rho VB}{\mu}\right] = \textit{Reynolds No.}$$

Square first $\pi$ . $\quad \frac{V^2}{gB} = C \quad$ *Froude No.*

Take $\pi$ on left side and multiply by square of reciprocal of first $\pi$ on right side of the equation.

$$\frac{D}{\rho g B^3} \times \frac{gB}{V^2} = \left(\frac{D}{\rho V^2 B^2}\right) = \frac{p}{\rho V^2} = \textit{Euler No.}$$

http://ingesolucionarios.blogspot.com

7.24

The pressure drop $\Delta p$ in a compressible one-dimensional flow in a circular duct is a function of the following variables:
Density, $\rho$
Velocity of sound, $c$
Viscosity, $\mu$
Velocity of flow, $V$
Diameter of duct, $D$
Length of duct, $L$
What are the dimensionless groups involved? Manipulate your results until you get an Euler number, a Reynolds number, and a Mach number as three of your $\pi$'s.

$$\Delta p = f(\rho, c, \mu, V, D, L)$$

$$\Delta p = K_1[(\rho)^{a_1}(c)^{b_1}(\mu)^{c_1}(V)^{d_1}(D)^{e_1}(L^{f_1})] + \ldots$$

$$\left[\frac{F}{L^2}\right] = \left[\left(\frac{\frac{FT^2}{L}}{L^3}\right)^a \left(\frac{L}{T}\right)^b \left(\frac{FT}{L^2}\right)^c \left(\frac{L}{T}\right)^d (L)^e (L)^f\right]$$

**For dimensional homogeneity**

$$\begin{cases} f & 1 = a + c \\ L & -2 = -4a + b - 2c + d + e + f \\ T & 0 = 2a - b + c - d \end{cases}$$

$$a = 1 - c$$

$$b = (2)(1-c) + c - d = -c - d + 2$$

$$e = -2 + 4(1-c) + (c+d-2) + 2c - d - f = -c - f$$

$$\therefore \quad \Delta p = K[\rho^{(1-c)} c^{(-c-d+2)} \mu^c V^d D^{(-c-f)} L^f] + \ldots$$

$$\frac{\Delta p}{\rho c^2} = f\left[\left(\frac{\mu}{\rho c D}\right), \left(\frac{V}{c}\right), \left(\frac{L}{D}\right)\right]$$

$$\pi_1 \qquad \pi_2 \qquad \pi_3 \qquad \pi_4$$

Multiply $\pi_1 \times \frac{1}{\pi_3^2}$ to get $\left(\frac{\Delta p}{\rho V^2}\right)$. Multiply $\pi_2^{-1} \times \pi_3 = \left(\frac{\rho V D}{\mu}\right)$. We then get

$$\left[\frac{\Delta p}{\rho V^2}\right] = g\left[\left(\frac{\rho V D}{\mu}\right), \left(\frac{V}{c}\right), \left(\frac{L}{D}\right)\right]$$

$$Eu = g\left[(Re), (M), \left(\frac{L}{D}\right)\right]$$

7.25

Formally develop the dimensionless groups given in Sec. 7.4 from the variables presented. If you don't get the particular groups presented in this section, manipulate the π's until you do.

$$p = f(L, \mu, \sigma, c, g, \rho, V)$$

$$\frac{F}{L^2} = K\left[(L^a)\left(\frac{FT}{L^2}\right)^b\left(\frac{F}{L}\right)^c\left(\frac{L}{T}\right)^d\left(\frac{L}{T^2}\right)^e\left(\frac{FT^2}{L^4}\right)^f\left(\frac{L}{T}\right)^g\right] + \ldots$$

Enforce **dimensional homogeneity**

$$\begin{cases} F & 1 = b + c + f \\ L & -2 = a - 2b - c + d + e - 4f + g \\ T & 0 = b - d - 2e + 2f - g \end{cases}$$

Get $e, f, g$ in terms of $a, b, c, d$.

$$\begin{cases} f = 1 - b - c \\ g = b - d - 2e + 2(1-b-c) = 2 - b - d - 2e - 2c \\ e = -2 - a + 2b + c - d + 4(1-b-c) - b + d + 2e - 2(1-b-c) \end{cases}$$

$$\begin{cases} f = 1 - b - c \\ g = 2 - b - 2c - 2e - d \\ e = a + b + c \end{cases}$$

$$\begin{cases} f = 1 - b - c \\ g = 2 - b - 2c - 2a - 2b - 2c - d = -2a - 3b - 4c - d + 2 \\ e = a + b + c \end{cases}$$

$$p = K[(L^a)(\mu)^b(\sigma)^c(c)^d(g)^{a+b+c}(\rho)^{1-b-c}(V)^{-2a-3b-4c-d+2}]$$

$$\left(\frac{p}{\rho V^2}\right) = f\left[\left(\frac{Lg}{V^2}\right), \left(\frac{\mu g}{\rho V^3}\right), \left(\frac{\sigma g}{\rho V^4}\right), \left(\frac{c}{V}\right)\right]$$

$$\pi_1 \qquad \pi_2 \qquad \pi_3 \qquad \pi_4 \qquad \pi_5$$

http://ingesolucionarios.blogspot.com

(cont.)

**NOTE:**

$\pi_1$ = *Euler No.*

$\pi_2$ = 1/*Froude No.*

$\pi_5$ = 1/*Mach No.*

Divide $\pi_3$ by $\pi_2$ .

$$\left(\frac{\mu g}{\rho V^3}\right)\left(\frac{V^2}{Lg}\right) = \left(\frac{\mu}{\rho VL}\right) = \frac{1}{Re}$$

Divide $\pi_4$ by $\pi_2$ .

$$\left(\frac{\sigma g}{\rho V^4}\right)\left(\frac{V^2}{Lg}\right) = \left(\frac{\mu}{\rho V^2 L}\right) = \frac{1}{Weber\ No.}$$

$$\therefore\quad Eu = G(Fr, Re, M, We)$$

http://ingesolucionarios.blogspot.com Edu_Zegarr_ch

7.26

In Fig. 12.33 we have shown vortices shedding from flow past a cylinder. If the frequency of vortex shedding $N$ is a function of $\rho$, $\mu$, $V$, and diameter $D$, what are the dimensionless groups characterizing the process?

$$N = f(\rho\,,\,\mu\,,\,V\,,\,D)$$

$$N = K_1\left[\rho^{a_1}\,\mu^{b_1}\,V^{c_1}\,D^{d_1}\right] + K_2\left[\rho^{a_2}\,\mu^{b_2}\,V^{c_2}\,D^{d_2}\right] + \ldots$$

**Dimensionally**

$$\frac{1}{T} = \left(\frac{M}{L^3}\right)^a \left(\frac{M}{LT}\right)^b \left(\frac{L}{T}\right)^c (L)^d$$

Enforce **dimensional homogeneity**

$$T: \quad -1 = -b-c$$

$$L: \quad 0 = -3a-b+c+d$$

$$M: \quad 0 = a+b$$

**Hence**

$$\begin{cases} a = -b \\ c = 1-b \\ d = 3a+b-c = -3b+b-1+b = -b-1 \end{cases}$$

$$\therefore \quad N = K\left[\rho^{-b}\,\mu^{b}\,V^{1-b}\,D^{-b-1}\right] + \ldots$$

$$\left(\frac{ND}{V}\right) = f\left[\frac{\mu}{\rho V D}\right] \qquad \therefore \qquad \boxed{N = \frac{V}{D} f(Re)}$$

http://ingesolucionarios.blogspot.com

7.27 $\Delta\phi = f(M_x, L, G, J)$

**Dimensional matrix**

**We learned in solid mechanics that the twist of a circular shaft is given by the following formula:**

$$\Delta\phi = \frac{M_x L}{GJ} \qquad (1)$$

**How close can you come to this result by using dimensional analysis? Proceed as follows:**
**(1) Using *FLT* system write dimensional matrix.**
**(2) What is the rank-*r* of this matrix?**
**(3) Now get as close as possible to Eq. (1) using dimensional analysis.**

| | $\Delta\phi$ | $M_x$ | L | G | J |
|---|---|---|---|---|---|
| F | 0 | 1 | 0 | 1 | 0 |
| L | 0 | 1 | 1 | −2 | 4 |
| T | 0 | 0 | 0 | 0 | 0 |

Dimensional Matrix

2)

$$\therefore \boxed{r=2}$$

3) $$\Delta\phi = K_1 M_x^{a_1} L^{b_1} G^{c_1} J^{d_1} + K_2 M_x^{a_2} L^{b_2} G^{c_2} J^{d_2} + \ldots$$

**Dimensionally** $$1 = (FL)^a (L)^b (FL^{-2})^c (L^4)^d$$

Impose **dimensional homogeneity.**

$$\begin{cases} F: & 0 = a+c \\ L: & 0 = a+b-2c+4d \end{cases}$$

Get "a" and "b" in terms of "c" and "d".

$$\begin{cases} a = -c \\ b = -a+2c-4d = 3c-4d \end{cases}$$

$$\Delta\phi = M_x^{-c} L^{3c-4d} G^c J^d = K_1\left[\left(\frac{GL^3}{M_x}\right)^c \left(\frac{J}{L^4}\right)^d\right] + \ldots$$

$$\therefore \quad \Delta\phi = f\left(\frac{GL^3}{M_x}, \frac{J}{L^4}\right)$$

$$\pi_1 \qquad \pi_2$$

Multiply $\frac{1}{\pi_1} \times \frac{1}{\pi_2}$

$$\Delta\phi = g\left[\left(\frac{M_x}{GL^3}\right)\left(\frac{L^4}{J}\right)\right] = g\left(\frac{M_x L}{GJ}\right)$$ $\therefore$ We are close.

http://ingesolucionarios.blogspot.com

7.28

A jet of liquid (1) enters liquid (2). The length $L$ from discharge to complete disintegration is to be studied. If the variables known to be involved are the densities and viscosities of the fluids and the jet velocity $V_j$ as well as the jet diameter $D_j$, determine the dimensionless groups involved.

$$L = f(D_j, V_j, \mu_1, \mu_2, \rho_1, \rho_2)$$

$$L = K_1\left[D_j^a V_j^b \mu_1^c \mu_2^d \rho_1^e \rho_2^f\right] + \ldots$$

**Dimensionally**

$$L = (L^a)\left(\frac{L}{T}\right)^b\left(\frac{M}{LT}\right)^c\left(\frac{M}{LT}\right)^d\left(\frac{M}{L^3}\right)^e\left(\frac{M}{L^3}\right)^f$$

Impose **dimensional homogeneity**

$$L: \quad 1 = a+b-c-d-3e-3f$$

$$M: \quad 0 = c+d+e+f$$

$$T: \quad 0 = -b-c-d$$

Hence

$$b = -c-d$$

$$e = -c-d-f$$

$$a = 1+(c+d)+c+d+3(-c-d-f)+3f = 1-c-d$$

Collect

$$L = K\left[D_j^{(1-c-d)} V_j^{(-c-d)} \mu^c \mu^d \rho_1^f \rho_2^{(-c-d-f)}\right] + \ldots$$

$$\left(\frac{L}{D_j}\right) = K\left[\left(\frac{\mu_1}{D_j V_j \rho_2}\right)\left(\frac{\mu_2}{\rho_2 V_j D_j}\right)\left(\frac{\rho_1}{\rho_2}\right)\right] + \ldots$$

$$\boxed{\frac{L}{D_j} = f\left[\left(\frac{\rho_2 V_j D_j}{\mu_1}\right), \left(\frac{\rho_2 V_j D_j}{\mu_2}\right), \left(\frac{\rho_1}{\rho_2}\right)\right]}$$

$$\pi_1 \qquad \pi_2 \qquad \pi_3$$

$\pi_1$ , $\pi_2$ are Reynolds numbers.

http://ingesolucionarios.blogspot.com

Stoke's law for a small sphere of radius $R$ has a drag $F$ for steady creeping flow around the sphere given as

$$F = 6\pi\mu VR$$

How would you get this formula experimentally with a minimum of experimentation knowing the variables involved?

7.29 **First do a dimensional analysis**

$$F = f(\mu, V, R) \quad \therefore \quad F = K(\mu^a V^b R^c) + \ldots$$

**Dimensionally** (use $FLT$)

$$\text{NOTE} \qquad F = Ma \qquad F = M\frac{L}{T^2}$$

$$\therefore \quad \boxed{M = \frac{FT^2}{L}}$$

$$\therefore \quad F = \left(\frac{\frac{FT^2}{L}}{LT}\right)^a \left(\frac{L}{T}\right)^b (L)^c = \left(\frac{FT}{L^2}\right)^a \left(\frac{L}{T}\right)^b (L)^c$$

Impose **dimensional homogeneity**

$F$: $1 = a$

$T$: $0 = a - b$

$L$: $0 = -2a + b + c$

$$\therefore \begin{cases} a = 1 \\ b = a = 1 \\ c = 2a - b = 2 - 1 = 1 \end{cases}$$

$$\therefore \quad F = K(\mu VR)^1 + \ldots$$

$\therefore \; f\left(\dfrac{F}{\mu VR}\right)$ is some unknown function. Vary $\left(\dfrac{F}{\mu VR}\right)$ by **varying** $V$. You will find

$$\frac{F}{\mu VR} = const = 6\pi$$

http://ingesolucionarios.blogspot.com

7.30

In strength of materials you learned that the buckling load of a pin ended column is given as

$$P_{cr} = \frac{\pi^2 EI}{L^2}$$

How close can you come to this formulation via dimensional analysis?

$$P_{cr} = f(E, I, L)$$

$$P_{cr} = K\left[E^a I^b L^c\right]$$

Dimensionally

$$F = \left(\frac{F}{L^2}\right)^a (L^4)^b (L^c)$$

Enforce **dimensional homogeneity.**

$$1 = a \qquad 0 = -2a + 4b + c \qquad a = 1 \qquad c = 2 - 4b$$

$$P_{cr} = K\left[E I^b L^{2-4b}\right]$$

$$\therefore \quad \frac{P_{cr}}{EL^2} = K\left(\frac{I}{L^4}\right)^b \qquad\qquad \therefore \quad \frac{P_{cr}}{EL^2} = f\left(\frac{I}{L^4}\right)$$

From problem statement

$$\frac{P_{cr}}{EL^2} = \pi^2\left(\frac{I}{L^4}\right)$$

$\therefore$ we come close.

http://ingesolucionarios.blogspot.com

7.31

The drag $D$ of a diving bell depends on the following variables: Volume of vehicle, $V$ Density of water, $\rho$ Viscosity of water, $\mu$ The speed of the vehicle, $\dot{s}$ The roughness of the surfaces, $e$ Derive a set of independent dimensionless groups. Use the $MLT$ system of dimensions. We want $\rho$, $\dot{s}$, and $e$ in the same group.

**Drag a function of:**

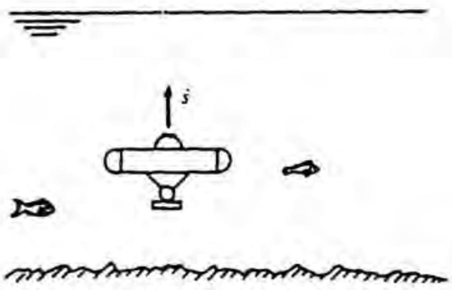


- Volume of vehicle $V$
- Density of water $\rho$
- Vicosity of water $\mu$
- Speed of vehicle $\dot{s}$
- Roughness of surface $e$

$$\therefore \quad D = f(V, \rho, \mu, \dot{s}, e)$$

$$D = K_1\left(V^{a_1}\rho^{b_1}\mu^{c_1}\dot{s}^{d_1}e^{f_1}\right) + K_2\left(V^{a_2}\rho^{b_2}\mu^{c_2}\dot{s}^{d_2}e^{f_2}\right) + \dots$$

Dimensional representation using $MLT$ system

$$\left(\frac{ML}{T^2}\right) = (L^3)^a\left(\frac{M}{L^3}\right)^b\left(\frac{M}{LT}\right)^c\left(\frac{L}{T}\right)^d(L)^f$$

**Enforce dimensional homogeneity**

$$\begin{cases} M: & 1 = b + c \\ L: & 1 = 3a - 3b - c + d + f \\ T: & -2 = -c - d \end{cases}$$

We want $\rho, \dot{s}, e$ in same group. Hence, eliminate $b, d, f$.

$$b = 1 - c$$

$$d = 2 - c$$

$$f = 1 - 3a + 3(1-c) + c - (2-c) = (2 - 3a - c)$$

Hence

$$D = K_1\left[V^a\rho^{(1-c)}\mu^c\dot{s}^{(2-c)}e^{(2-3a-c)}\right] + \dots$$

$$\therefore \quad \boxed{\left[\frac{D}{\rho\dot{s}^2e^2}\right] = f\left[\left(\frac{V}{e^3}\right)\left(\frac{\mu}{\rho\dot{s}e}\right)\right]}$$

http://ingesolucionarios.blogspot.com

7.32

The drag on a rectangular $a \times b$ plate at an angle $\alpha$ relative to a wind of velocity $V$ is desired. The drag depends on $a$, $b$, $\alpha$, $V$, $\mu$, and $\rho$. What dimensionless groups characterize the process?

$$D = f(\rho, V, \mu, \alpha, a, b)$$

$$\therefore \quad D = K_1 \left[\rho^a V^b \mu^c \alpha^d a^e b^f\right] + \dots$$

Dimensionally,

$$\left(\frac{ML}{T^2}\right) = \left(\frac{M}{L^3}\right)^a \left(\frac{L}{T}\right)^b \left(\frac{M}{LT}\right)^c (1)^d (L)^e (L)^f$$

Enforce **dimensional homogeneity**.

$$\begin{cases} M: & 1 = a + c \\ T: & -2 = -b - c \\ L: & 1 = -3a + b - c + e + f \end{cases}$$

Hence

$$\begin{cases} a = 1 - c \\ b = 2 - c \\ e = 1 + (3 - 3c) - 2 + c + c - f = 2 - c - f \\ d = 0 \end{cases}$$

$$\therefore \quad D = K\left[\rho^{(1-c)} V^{(2-c)} \mu^c \alpha^o a^{(2-c-f)} b^f\right] + \dots$$

$$\left(\frac{D}{\rho V^2 a^2}\right) = f\left[\left(\frac{\mu}{\rho V a}\right), \alpha, \left(\frac{b}{a}\right)\right]$$

$$\pi_1 \qquad \pi_2 \qquad \pi_3 \qquad \pi_4$$

$$\left(\frac{D}{\rho V^2 a^2}\right) = g\left[\left(\frac{\rho V a}{\mu}\right), \alpha, \frac{b}{a}\right]$$

*Press. Coef.* $\qquad R_e \qquad$ *Geom.*

http://ingesolucionarios.blogspot.com

7.33

$$q = f(k, A, L, t_1, t_2)$$

$$q = K\left[(k^a A^b L^c \theta^d \theta^e)\right]$$

Fourier's law of heat conduction in a solid is known to be

$$q = \frac{kA}{L}(t_2 - t_1)$$

where $q$ = energy flow per unit time
$k$ = is the thermal conductivity and is energy times thickness per unit area, per unit time, per unit temperature
$t$ = temperature

How close can you come to Fourier's conduction law by dimensional analysis?

Dimensionally,

$$\left(\frac{LF}{T}\right) = \left[\left(\frac{LFL}{L^2\theta T}\right)^a (L^2)^b (L)^c (\theta)^d (\theta)^e\right] + \ldots$$

Enforcing **dimensional homogeneity**:

$$\begin{cases} F: & 1 = a \\ T: & -1 = -a \\ L: & 1 = 2b + c \\ \theta: & 0 = -a + d + e \end{cases}$$

Hence:

$$\begin{cases} a = 1 \\ c = 1 - 2b \\ e = 1 - d \end{cases}$$

$$q = K\left[k^1 A^b L^{(1-2b)} t_1^d t_2^{(1-d)}\right] + \ldots$$

$$\underset{\pi_1}{\left(\frac{q}{kLt_2}\right)} = f\left[\underset{\pi_2}{\left(\frac{A}{L^2}\right)} \underset{\pi_3}{\left(\frac{t_1}{t_2}\right)}\right] \qquad (1)$$

Go back to **Fourier's conduciton law**. Rewrite. $\frac{qL}{kA} = (t_2 - t_1)$

Divide by $t_2$

$$\frac{qL}{kAt_2} = \left(\frac{t_2}{t_1} - 1\right) \qquad (2)$$

Now multiply $\pi_1$ to $(\pi_2)^{-1}$

$$\left(\frac{qL}{kAt_2}\right) = q\left[\left(\frac{t_1}{t_2}\right)\right] \qquad (3)$$

Compare (2) and (3).

http://ingesolucionarios.blogspot.com
Edu_Zegarr_ch

http://ingesolucionarios.blogspot.com

7.34

In the chapter on boundary layers (Chap. 12, see Fig. 12.1), you will learn that the boundary layer thickness $\delta$ depends for a smooth plate on the following items:
$\mu$, viscosity of the fluid
$\rho$, mass density of the fluid
$V_0$, the free stream velocity
$x$, the distance from the leading edge of the plate
Theory indicates for a laminar boundary layer that

$$\frac{\delta}{x} = 4.96 \Big/ \sqrt{\frac{\rho V_0 x}{\mu}}$$

How close can you come by dimensional analysis? Notice that $\rho V_0 x/\mu$ is a form of Reynolds number with $x$ as the length dimension.

$$\delta = f(x, \mu, \rho, V_0)$$

$$\delta = K_1\left[x^a \mu^b \rho^c V_0^d\right] + \ldots$$

**Dimensionally**

$$(L) = (L)^a \left(\frac{M}{LT}\right)^b \left(\frac{M}{L^3}\right)^c \left(\frac{L}{T}\right)^d$$

**Enforce dimensional homogeneity.**

$$\begin{cases} L: & 1 = a-b-3c+d \\ M: & 0 = b+c \\ T: & 0 = -b-d \end{cases}$$

$$\begin{cases} b = -d \\ c = -b = d \\ a = 1+(-d)+3(d)-d = 1+d \end{cases}$$

$$(\delta) = K\left[x^{(1+d)} \mu^{-d} \rho^d V_0^d\right]$$

$$\left(\frac{\delta}{x}\right) = K\left[\left(\frac{\rho V_0 x}{\mu}\right)^d\right] + \ldots$$

$$\therefore \left(\frac{\delta}{x}\right) = f\left[\left(\frac{\rho V_0 x}{\mu}\right)\right]$$

Reynold's Number

http://ingesolucionarios.blogspot.com Edu_Zegarr_ch

http://ingesolucionarios.blogspot.com

7.35

The flow through a square-edged circular orifice is given in Appendix follows for an inviscid liquid.

$$q = A_2\left\{\frac{2(p_1 - p_2)/\rho}{\left[1 - (A_2/A_1)^2\right]}\right\}^{1/2}$$

where $A_2$ is the area of the orifice and $A_1$ is the area of the pipe. If we rewrite this formula as

$$q = \frac{\pi d^2}{4}\left(\frac{2\Delta p/\rho}{1 - (d/D)^2}\right)^{1/2} \qquad (a)$$

where $d$ is the orifice diameter, how close can we come to this result by dimensional analysis alone?

$$q = f(d, \Delta p, D, \rho)$$

$$q = K[(d)^a(\Delta p)^b(D)^c(e)^d] + \dots$$

Dimensionally,

$$\left(\frac{L^3}{T}\right) = (L)^a\left(\frac{F}{L^2}\right)^b(L)^c\left(\frac{FT^2}{L^4}\right)^d$$

Enforce dimensional homogeneity:

$$\begin{cases} F: & 0 = b+d \\ L: & 3 = a-2b+c-4d \\ T: & -1 = 2d \end{cases}$$

$$\begin{cases} b = -d \\ d = -\dfrac{1}{2} \\ a = 3+2b-c+4d=3+1-c-2 = 2-c \end{cases}$$

Hence

$$q = K\left[d^{(2-c)}\Delta p^{\frac{1}{2}}D^c\rho^{-\frac{1}{2}}\right] + \dots$$

$$\left(\frac{q\rho^{\frac{1}{2}}}{d^2\Delta p^{\frac{1}{2}}}\right) = K\left[\left(\frac{D}{d}\right) + \dots\right.$$

$$\therefore \quad \frac{q\sqrt{\rho}}{d^2\sqrt{\Delta p}} = f\left[\left(\frac{D}{d}\right)\right] \qquad (1)$$

Rewrite Eq. (1).

$$\left(\frac{2\sqrt{2}\,q}{\pi d^2}\right)\left(\frac{\rho}{\Delta p}\right)^{\frac{1}{2}} = \left[\frac{1}{1-\left(\frac{d}{D}\right)^2}\right]^{\frac{1}{2}} \qquad \therefore \quad \frac{q\sqrt{\rho}}{d^2\sqrt{p}} = \left(\frac{\pi}{2\sqrt{2}}\right)\left[\frac{1}{1-\left(\frac{d}{D}\right)^2}\right]^{\frac{1}{2}} \qquad (2)$$

http://ingesolucionarios.blogspot.com

http://ingesolucionarios.blogspot.com

The following variables are known to be involved in a flow:
$\rho$, mass density
$L$, characteristic length
$c$, velocity of sound
$\mu$, viscosity
$g$, acceleration of gravity
$V$, average velocity
$\Delta p$, pressure change
What are the $\pi$'s involved? Form the Reynolds number, Froude number, Mach number, and Euler number from your results.

7.36

$$\Delta p = f(\rho, L, \mu, c, g, V)$$

$$\therefore \quad (\Delta p) = K_1 \left[\rho^a L^b \mu^c c^d g^e V^f\right] + \ldots$$

Dimensionally,

$$\left(\frac{M}{T^2 L}\right) = \left[\left(\frac{M}{L^3}\right)^a (L)^b \left(\frac{M}{LT}\right)^c \left(\frac{L}{T}\right)^d \left(\frac{L}{T^2}\right)^e \left(\frac{L}{T}\right)^f\right]$$

Enforce **dimensional homogeneity:**

$$\begin{cases} M: \quad 1 = a+c & (1) \\ L: \quad -1 = -3a+b-c+d+e+f & (2) \\ T: \quad -2 = -c-d-2e-f & (3) \end{cases}$$

Find $a, c$ and $f$ in terms of others.

$$\begin{cases} a = 1-c & (4) \\ c = 1-3a+b+d+e+f & (5) \\ f = 2-c-d-2e & (6) \end{cases}$$

Subst. for $f$ in (5) from (6). Subst. for $a$ from (4) in (5).

$$c = 1-3(1-c)+b+d+e+2-c-d-2e$$

$$\therefore \quad -c = b-e$$

Go to (4). Subst. for $c$.

$$a = 1+b-c$$

Go to (6). Subst. for $c$.

$$f = 2+(b-e)-d-2e = 2+b-3e-d$$

http://ingesolucionarios.blogspot.com

**(cont.)**

$$\therefore \quad (\Delta p) = K_1[e^{1+b-e}L^b\mu^{(-b+e)}c^d g^e V^{(2+b-3e-d)}] + \ldots$$

$$\left(\frac{\Delta p}{\rho V^2}\right) = f\left[\left(\frac{\rho L V}{\mu}\right)\left(\frac{\mu g}{\rho V^3}\right)\left(\frac{c}{V}\right)\right]$$

$\pi_1$ $\pi_2$ $\pi_3$ $\pi_4$

$\pi_1$ = **Euler Number**

$\pi_2$ = **Reynolds Number**

$\pi_4$ = **Mach Number**

Multiply $\pi_3$ by $\pi_2$ .

$$\left(\frac{\mu g}{\rho V^3}\right)\left(\frac{\rho L V}{\mu}\right) = \frac{Lg}{V^2}$$

Take reciprocal $\frac{V^2}{Lg}$ = **Froude's Number.**

http://ingesolucionarios.blogspot.com Edu_Zegarr_ch

http://ingesolucionarios.blogspot.com

7.37 $h = f(D, \theta, \sigma, g, \rho)$ $\quad F = \dfrac{ML}{T^2}$ $\quad \therefore\ M = \dfrac{FT^2}{L}$ $\quad \rho = \dfrac{M}{L^3} = \dfrac{FT^2}{L^4}$

Dimensional matrix:

| | h | D | θ | σ | g | ρ |
|---|---|---|---|---|---|---|
| F | 0 | 0 | 0 | 1 | 1 | 1 |
| L | 1 | 1 | 0 | -1 | 0 | -4 |
| T | 0 | 0 | 0 | 0 | -2 | 2 |

The rise in a tube due to capillary action is a function of $D$, $\theta$, $\sigma$, $g$, and $\rho$.

$$\therefore h = f(D, \theta, \sigma, g, \rho)$$

where $\sigma$ is the surface tension $(F/L)$. Rewrite this relation in terms of dimensionless groups. Have $\sigma$, $\rho$, and $g$ be in the *same* $\pi$. Use $F$, $L$, and $T$ as basic dimensions. What is $r$ as determined by the dimensional matrix? By algebraic manipulation of $\pi$'s reach the following result:

$$\left(\frac{h}{D}\right) = G\left[\left(\frac{\sigma}{D^2\rho g}\right), \theta\right]$$

**Rank is 3** $\quad \begin{vmatrix} 1 & 1 & 1 \\ -1 & 0 & -4 \\ 0 & -2 & 2 \end{vmatrix} \neq 0$

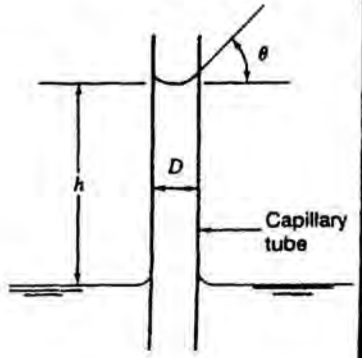


**Power Series**

$$h = K_1\left[D^{a_1}\,\theta^{b_1}\,\sigma^{c_1}\,g^{d_1}\,\rho^{f_1}\right] + \ldots$$

**Dimensionally**

$$(L) = (L)^a (1)^b \left(\frac{F}{L}\right)^c \left(\frac{L}{T^2}\right)^d \left(\frac{FT^2}{L^4}\right)^f$$

Enforce **dimensional homogeneity.**

$$\begin{cases} F: & 0 = c + f \\ L: & 1 = a - c + d - 4f \\ T: & 0 = -2d + 2f \end{cases}$$

We want $\sigma, g, \rho$ together. **Eliminate** $c, d$, and $f$.

$c = -f$ (1)

$c = a + d - 4f - 1$ (2)

$d = f$ (3)

Use (1) and (3) in (2).

$$c = a + f - 4f - 1 = a - 3f - 1 = a + 3c - 1$$

$$\therefore \quad \boxed{c = \frac{1}{2} - \frac{a}{2}}$$

http://ingesolucionarios.blogspot.com

**(cont.)**

Use (3) into (1).

$$d = -c = -\frac{1}{2} + \frac{a}{2}$$

From (1)

$$f = -c = -\frac{1}{2} + \frac{a}{2}$$

$$\therefore \quad h = K\left[D^a \theta^b \sigma^{\left(\frac{1}{2} - \frac{a}{2}\right)} g^{\left(-\frac{1}{2} + \frac{a}{2}\right)} \rho^{\left(-\frac{1}{2} + \frac{a}{2}\right)}\right] + \ldots$$

$$\left(\frac{h g^{\frac{1}{2}} \rho^{\frac{1}{2}}}{\sigma^{\frac{1}{2}}}\right) = K\left[\left(\frac{D g^{\frac{1}{2}} \rho^{\frac{1}{2}}}{\sigma^{\frac{1}{2}}}\right)^a (\theta)^b\right] + \ldots$$

$$\therefore \quad \left(\frac{h g^{\frac{1}{2}} \rho^{\frac{1}{2}}}{\sigma^{\frac{1}{2}}}\right) = f\left[\left(\frac{D g^{\frac{1}{2}} \rho^{\frac{1}{2}}}{\sigma^{\frac{1}{2}}}\right)(\theta)\right]$$

$\pi_1$ $\pi_2$ $\pi_3$

To get desired result, get $\left(\frac{\pi_2}{\pi_1}\right)$

$$\frac{\left(\frac{D g^{\frac{1}{2}} \rho^{\frac{1}{2}}}{\sigma^{\frac{1}{2}}}\right)}{\left(\frac{h g^{\frac{1}{2}} \rho^{\frac{1}{2}}}{\sigma^{\frac{1}{2}}}\right)} = \left(\frac{h}{D}\right)$$

**Square $\pi_2$ and invert.**

$$\left(\frac{D g^{\frac{1}{2}} \rho^{\frac{1}{2}}}{\sigma^{\frac{1}{2}}}\right)^{-2} = \left(\frac{\sigma}{D^2 g \rho}\right)$$

$$\therefore \quad \left(\frac{h}{D}\right) = G\left[\left(\frac{\sigma}{D^2 g \rho}\right), (\theta)\right]$$

http://ingesolucionarios.blogspot.com

7.38 $$T = K_1\left[V_0^a D^b \rho^c \mu^d c^e \omega^f\right] + \ldots$$

The thrust from an airplane propeller is a function of the following variables:
$V_0$ = speed of airplane
$D$ = diameter of propeller
$\rho$ = density of air
$\mu$ = viscosity of the air
$c$ = speed of sound
$\omega$ = ang. speed of propeller
Hence,
$$T = f(V_0, D, \rho, \mu, c, \omega)$$
Find the dimensionless groups that characterize the process. Manipulate so you get:
$$\frac{T}{\rho\omega^2 D^4} = g\left(\frac{\rho V_0 D}{\mu}, \frac{V_0}{c}, \frac{V_0}{\omega D}\right)$$

Dimensionally

$$\frac{ML}{T^2} = \left(\frac{L}{T}\right)^a (L)^b \left(\frac{M}{L^3}\right)^c \left(\frac{M}{LT}\right)^d \left(\frac{L}{T}\right)^e \left(\frac{1}{T}\right)^f$$

Enforce dimensional homogeneity.

$$\begin{cases} M: & 1 = c+d & (1) \\ L: & 1 = a+b-3c-d+e & (2) \\ T: & -2 = -a-d-e-f & (3) \end{cases}$$

Solve $a, b, c$ in terms of $d, e, f$. From (1):

From (1): $$c = 1-d$$

From (3):

$$a = 2-d-e-f$$

From (2):

$$b = 1-(2-d-e-f)+3(1-d)+d-e$$

$$\therefore \quad b = 2-d+f$$

$$\therefore \quad T = K_1\left[V_0^{(2-d-e-f)} D^{(2-d+f)} \rho^{(1-d)} \mu^d c^e \omega^f\right] + \ldots$$

Group terms:

$$\left(\frac{T}{\rho V_0^2 D^2}\right) = f\left\{\left(\frac{\mu}{V_0 D \rho}\right), \left(\frac{c}{V_0}\right), \left(\frac{\omega D}{V_0}\right)\right\}$$

$\pi_1$ $\pi_2$ $\pi_3$ $\pi_4$

Take $$\pi_1 \times \frac{1}{(\pi_4)^2} = \left(\frac{T}{\rho V_0^2 D^2}\right)\left(\frac{V_0^2}{\omega^2 D^2}\right) = \frac{T}{\rho \omega^2 D^4}$$

$$\boxed{\frac{T}{\rho \omega^2 D^4} = g\left\{\left(\frac{\rho V_0 D}{\mu}\right), \left(\frac{V_0}{c}\right), \left(\frac{V_0}{\omega D}\right)\right\}}$$

http://ingesolucionarios.blogspot.com Edu_Zegarr_ch

http://ingesolucionarios.blogspot.com

7.39

A capillary tube can be used for measuring viscosity. It is known that for this device the viscosity $\mu$ is a functioh of the following variables:

$D$, diameter of tube
$\rho$, mass density of fluid
$g$, acceleration of gravity
$L$, length of tube from capillary to exit
$h$, height of capillary fluid
$q$, volume flow of fluid

How close can you get to the following solution:

$$\left(\frac{\mu}{\rho g^{1/3} q^{1/3}}\right) = \frac{\pi}{128}\left(\frac{D^4 g^{2/3}}{q^{4/3}}\right)\left(\frac{h}{L}\right)$$

$$\mu = f(D, \rho, g, L, h, q)$$

**Power Series**

$$\mu = K_1\left[D^{a_1}\rho^{b_1}g^{c_1}L^{d_1}h^{e_1}q^{f_1}\right] + \ldots$$

**Dimensionally**

$$\frac{M}{LT} = (L)^a\left(\frac{M}{L^3}\right)^b\left(\frac{L}{T^2}\right)^c(L)^d(L)^e\left(\frac{L^3}{T}\right)^f$$

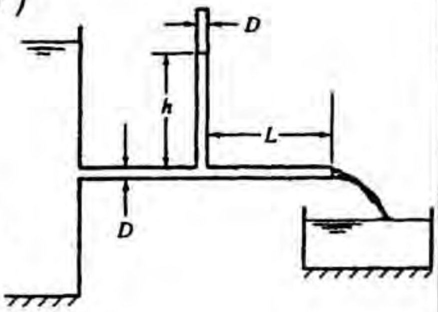


Enforce **dimensional homogeneity**

$$\begin{cases} M: & 1 = b \\ L: & -1 = a-3b+c+d+e+3f \\ T: & -1 = -2c-f \end{cases}$$

Get $b, c, f$ in terms of $a, d, e$

$$\boxed{b = 1} \qquad (1)$$

$$c = \frac{(1-f)}{2} \qquad (2)$$

$$f = \frac{1}{3}(-1-a+3b-c-d-e) \qquad (3)$$

Replace $c$ and $b$ from (1) and (2) in (3).

$$f = \frac{1}{3}\left[-1-a+3-\left(\frac{1-f}{2}\right) - d-e\right]$$

$$\therefore\ 3f = -1-a+3 - \frac{1}{2} + \frac{f}{2} - d - e$$

http://ingesolucionarios.blogspot.com

(cont.)

$$\frac{5}{2}f = \frac{3}{2} - a - d - e$$

$$\boxed{f = \frac{3}{5} - \frac{2}{5}a - \frac{2}{5}d - \frac{2}{5}e}$$

$$\therefore \quad c = \frac{1}{2}\left(1 - \frac{3}{5} + \frac{2}{5}a + \frac{2}{5}d + \frac{2}{5}e\right)$$

$$\boxed{c = \frac{1}{5} + \frac{1}{5}a + \frac{1}{5}d + \frac{1}{5}e}$$

$$\mu = K\left[D^a \rho^1 g^{\frac{1}{5}(1+a+d+e)} L^d h^e q^{\frac{1}{5}(3-2a-2d-2e)}\right] + \ldots$$

Group

$$\left(\frac{\mu}{g^{\frac{1}{5}}\rho q^{\frac{3}{5}}}\right) = K\left[\left(\frac{D g^{\frac{1}{5}}}{q^{\frac{2}{5}}}\right)^a \left(\frac{g^{\frac{1}{5}} L}{q^{\frac{2}{5}}}\right)^d \left(\frac{h g^{\frac{1}{5}}}{q^{\frac{2}{5}}}\right)^e\right] + \ldots$$

$$\left(\frac{\mu}{g^{\frac{1}{5}}\rho q^{\frac{3}{5}}}\right) = f\left[\left(\frac{D g^{\frac{1}{5}}}{q^{\frac{2}{5}}}\right), \left(\frac{g^{\frac{1}{5}} L}{q^{\frac{2}{5}}}\right), \left(\frac{h g^{\frac{1}{5}}}{q^{\frac{2}{5}}}\right)\right]$$

$\pi_1$ $\pi_2$ $\pi_3$ $\pi_4$

Divide $\pi_4$ by $\pi_3$. Raise $\pi_2$ to 4th power.

$$\therefore \quad \left(\frac{\mu}{\rho g^{\frac{1}{5}} q}\right) = f\left[\left(\frac{D^4 g^{\frac{4}{5}}}{q^{\frac{8}{5}}}\right)\left(\frac{h}{L}\right)\right]$$

http://ingesolucionarios.blogspot.com

7.40

$$\mu = f(T_q, \omega, r_1, h, \alpha, \epsilon)$$

The viscosity $\mu$ in a viscosimeter in Appendix A) depends on the following variables:
$T_q$, torque on the spring
$\omega$, angular speed or container
$r_1$, radius of drum
$h$, height of drum
$\epsilon$, distance between drum base and container
$\alpha = (r_2 - r_1)$, distance between container and drum bottom
Evaluate the dimensionless groups getting $\mu$, $\omega$, and $T$ in one group. How close can you come to the following analytic solution?

$$\left(\frac{\mu\omega r_1^3}{T_q}\right) = \frac{1}{2\pi}\left[\frac{1}{(h/\alpha) + (1/4)(r_1/\epsilon)}\right]$$

$$\mu = K\left[T_q^a\, \omega^b\, r_1^c\, h^e\, \alpha^f\, \epsilon^g\right] + \ldots$$

**Dimensionally,**

$$\left(\frac{M}{LT}\right) = \left(\frac{ML^2}{T^2}\right)^a \left(\frac{1}{T}\right)^b (L)^c\,(L)^e\,(L)^f\,(L)^g$$

**Enforce dimensional homogeneity.**

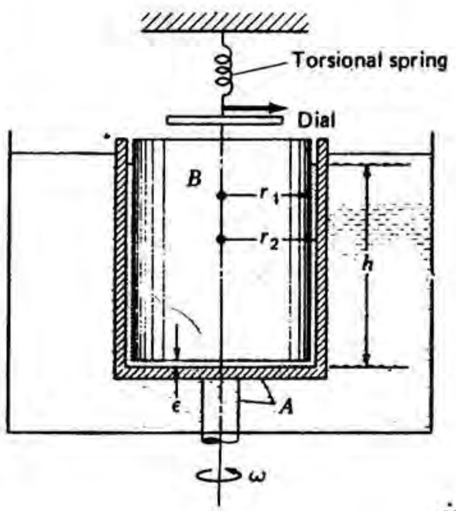


$$\begin{cases} M: & 1 = a \\ L: & -1 = 2a + c + e + g + f \\ T: & -1 = -2a - b \end{cases}$$

$$\therefore \begin{cases} a = 1 \\ b = 1 - 2 = -1 \\ c = -1 - 2 - e - g - f = -3 - e - g - f \end{cases}$$

$$\therefore \quad \mu = K\left(T_q^1\, \omega^{-1}\, r_1^{(-3-e-g-f)}\, h^e\, \alpha^f\, \epsilon^g\right) + \ldots$$

$$\left(\frac{\mu\omega r_1^3}{T_q}\right) = K\left[\left(\frac{h}{r}\right)^e \left(\frac{\alpha}{r}\right)^f \left(\frac{\epsilon}{r}\right)^g\right] + \ldots$$

$$\therefore \quad \left(\frac{\mu\omega r_1^3}{T_q}\right) = f\left[\left(\frac{h}{r_1}\right), \left(\frac{\alpha}{r_1}\right), \left(\frac{\epsilon}{r_1}\right)\right]$$

$$\pi_1 \qquad \pi_2 \quad \pi_3 \quad \pi_4$$

Divide $\pi_2$ by $\pi_3$. Take reciprocal of $\pi_4$.

$$\left(\frac{\mu\omega r_1^3}{T_q}\right) = f\left[\left(\frac{h}{\alpha}\right), \left(\frac{r_1}{\epsilon}\right)\right]$$

http://ingesolucionarios.blogspot.com 

http://ingesolucionarios.blogspot.com

7.41

We computed the viscosity of a fluid by observing the terminal speed $V_T$ of a small sphere of radius $R$ and mass density $\rho_s$ in the viscous fluid whose density is $\rho_L$. We got the following result

$$\mu = \frac{2}{9}\frac{gR^2}{V_T}[\rho_s - \rho_L] \qquad (a)$$

How close can you come using dimensional analysis?

$$\mu = f(g, R, V_T, \rho_S, \rho_L)$$

$$\mu = K\left[g^a R^b V_T^c \rho_S^d \rho_L^e\right]$$

Dimensionally,

$$\left(\frac{M}{LT}\right) = \left(\frac{L}{T^2}\right)^a (L)^b \left(\frac{L}{T}\right)^c \left(\frac{M}{L^3}\right)^d \left(\frac{M}{L^3}\right)^e$$

Enforce **dimensional homogeneity**.

$$\begin{cases} M: & 1 = d + e \\ T: & -1 = -2a - c \\ L: & -1 = a + b + c - 3d - 3e \end{cases}$$

Hence

$$d = 1 - e$$

$$c = -2a + 1$$

$$b = -1 - a + (2a - 1) + 3 - 3e + 3e = 1 + a$$

$$\therefore \quad \mu = K\left[g^a R^{(1+a)} V_T^{(-2a+1)} \rho_S^{(1-e)} \rho_L^e\right]$$

$$\underset{\pi_1}{\left(\frac{\mu}{RV_T\rho_S}\right)} = f\left[\underset{\pi_2}{\left(\frac{gR}{V_T^2}\right)}\underset{\pi_3}{\left(\frac{\rho_L}{\rho_S}\right)}\right]$$

Go back to Eq. (a). Rewrite as follows:

$$\boxed{\frac{\mu V_T}{gR^2\rho_S} = \frac{2}{9}\left[1 - \frac{\rho_L}{\rho_S}\right]}$$

Next multiply $\pi_1$ by $\pi_2^{-1}$

$$\left(\frac{\mu}{RV_T\rho_S}\right)\left(\frac{V_T^2}{gR}\right) = \left(\frac{\mu V_T}{gR^2\rho_S}\right) \qquad \therefore \qquad \boxed{\frac{\mu V_T}{gR^2\rho_S} = f\left[\left(\frac{\rho_L}{\rho_S}\right)\right]}$$

http://ingesolucionarios.blogspot.com Edu_Zegarr_ch 

http://ingesolucionarios.blogspot.com

7.42

In the chapter on free surface flow you will learn that a *hydraulic jump* can occur in a rapidly moving flow that must slow down as a result of a downstream obstruction (see Fig. 13.24). Equation states for this flow that

$$y_2 = \frac{-y_1 \pm \sqrt{y_1^2 + (8Q^2/gb^2)(1/y_1)}}{2}$$

where $Q$ is the volume of flow and $b$ is the width of the channel. This equation can be rewritten as

$$\left(\frac{y_2}{y_1}\right) = \frac{-1 \pm \sqrt{1 + (8Q^2/gb^2y_1^3)}}{2}$$

(*a*) How close can you come to this result by dimensional analysis?
(*b*) Show that $Q^2/gb^2y_1^3$ is a Froude number with $y_1$ as the length dimension.

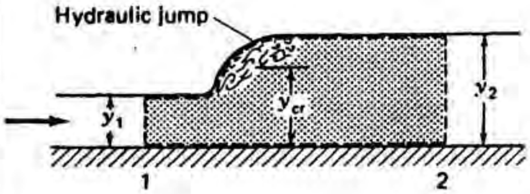


$$y_2 = f(y_1, Q, g, b)$$

$$y_2 = K_1[y^a Q^b g^c b^d] + \ldots$$

**Dimensionally,**

$$(L) = (L)^a \left(\frac{L^3}{T}\right)^b \left(\frac{L}{T^2}\right)^c (L)^d$$

**Enforce dimensional homogeneity.**

$$L: \quad 1 = a + 3b + c + d$$

$$T: \quad 0 = -b - 2c$$

$$\therefore \begin{cases} b = -2c \\ d = 1 - a + 6c - c = 1 - a + 5c \end{cases}$$

$$\therefore \quad y_2 = K_1\left[y_1^a Q^{-2c} g^c b^{(1-a+5c)}\right] + \ldots$$

$$\left(\frac{y_2}{b}\right) = K_1\left[\left(\frac{y_1}{b}\right)^a \left(\frac{b^5 g}{Q^2}\right)\right] + \ldots$$

$$\therefore \quad \left(\frac{y_2}{b}\right) = f\left[\left(\frac{y_1}{b}\right), \left(\frac{b^5 g}{Q^2}\right)\right]$$

$$\pi_1 \qquad \pi_2 \qquad \pi_3$$

Divide $\pi_1$ by $\pi_2$

http://ingesolucionarios.blogspot.com Edu_Zegarr_ch

http://ingesolucionarios.blogspot.com

(cont.)

$$\therefore \quad \frac{\frac{y_2}{b}}{\frac{y_1}{b}} = \left(\frac{y_2}{y_1}\right)$$

Take $\pi_3^{-1}$ and divide by $(\pi_2)^3$ .

$$\frac{\frac{Q^2}{b^5 g}}{\left(\frac{y_1}{b}\right)^3} = \left(\frac{Q^2}{b^2 y_1^3 g}\right)$$

$$\therefore \quad \left(\frac{y_1}{y_2}\right) = g\left[\left(\frac{y_1}{b}\right), \left(\frac{Q^2}{b^2 y_1^3 g}\right)\right]$$

Note $\frac{Q^2}{b^2 y_1^3 q}$ is a form of Froude No. with $y_1$ as the length dimension. That is,

$$\frac{V^2 b^2 y_1^2}{b^2 y_1^3 g} = \frac{V^2}{g y_1} = Fr$$

http://ingesolucionarios.blogspot.com Edu_Zegarr_ch

http://ingesolucionarios.blogspot.com

7.43 Using $L$ and $T$ as basic dimensions, we should have four dimensionless groups.

$$0 = h(D, N, Q, \nu, g, \Delta H_D)$$

In the study of turbomachines, there are generally six variables involved. They are:
Size of machine diameter $D$
Rotational speed $N$
Volume flow through the machine $Q$
Kinematic viscosity $\nu$
Gravity $g$
Change in total head $\Delta H_D$
Show that the following describes the performance of turbomachines:

$$f\left(\frac{Q}{ND^3}, \frac{\Delta H_D}{D}, \frac{g}{N^2 D}, \frac{ND^2}{\nu}\right) = 0$$

$$\therefore \quad 0 = K_1[D^a N^b Q^c \nu^d g^e \Delta H_D^f] + \ldots$$

Dimensionally,

$$0 = (L^a)\left(\frac{1}{T}\right)^b\left(\frac{L^3}{T}\right)^c\left(\frac{L^2}{T}\right)^d\left(\frac{L}{T^2}\right)^e (L)^f$$

$$\begin{cases} \text{For } L & a+3c+2d+e+f=0 & (1) \\ \text{For } T & -b-c-d-2e=0 & (2) \end{cases}$$

Eliminate $Q$ and $D$ $\therefore$ $c$ and $a$

From (2): $$c = -b-d-2e$$

From (1): $$a = -3c-2d-e-f = 3(b+d+2e)-2d-e-f = 3b+d+5e-f$$

$$0 = K_1\left[(D)^{(3b+d+5e-f)}(N)^b(Q)^{(-b-d-2e)}(\nu)^d(g)^e(\Delta H_D)^f\right] + \ldots$$

$$0 = K_1\left[\left(\frac{D^3 N}{Q}\right)\left(\frac{D\nu}{Q}\right)\left(\frac{D^5 g}{Q^2}\right)\left(\frac{\Delta H_D}{D}\right)\right] + \ldots$$

$$0 = h\left(\frac{Q}{D^3 N}, \frac{\Delta H_D}{D}, \frac{D\nu}{Q}, \frac{D^5 g}{Q^2}\right)$$

$\pi_1$ $\pi_2$ $\pi_3$ $\pi_4$

Look at $$(\pi_1 \times \pi_3)^{-1} = \left(\frac{Q}{D^3 N}\,\frac{D\nu}{Q}\right)^{-1} = \left(\frac{\nu}{D^2 N}\right)^{-1} = \frac{ND^2}{\nu}$$

Take $$(\pi_1)^2 \times (\pi_4) = \left(\frac{Q^2}{D^6 N^2}\right)\left(\frac{D^5 g}{Q^2}\right) = \left(\frac{g}{N^2 D}\right)$$

Let $\frac{ND^2}{\nu}$ be $\pi_4$ and $\frac{q}{N^2 D}$ be $\pi_3$. We then have

$$\therefore \; f\left(\frac{Q}{ND^3}, \frac{\Delta H_D}{D}, \frac{g}{N^2 D}, \frac{ND^2}{\nu}\right) = 0$$

http://ingesolucionarios.blogspot.com Edu_Zegarr_ch

http://ingesolucionarios.blogspot.com

7.44

$$h = f(D, V, \rho, \mu, c_p, k)$$

$$h = K_1[D^a V^b \rho^c \mu^d c_p^e k^f] + \dots$$

Dimensionally,

$$\left(\frac{L}{\theta T^3}\right) = \left[(L)^a \left(\frac{L}{T}\right)^b \left(\frac{M}{L^3}\right)^c \left(\frac{M}{LT}\right)^d \left(\frac{FL}{\theta M}\right)^e \left(\frac{F}{\theta T}\right)^f\right]$$

Note that:

$$\left(\frac{\frac{ML}{T^2}L}{\theta M}\right) = \left(\frac{L^2}{\theta T^2}\right) \qquad \left(\frac{\frac{ML}{T^2}}{\theta T}\right) = \left(\frac{ML}{T^3 \theta}\right)$$

$$\therefore \quad \left(\frac{L}{\theta T^3}\right) = \left[(L)^a \left(\frac{L}{T}\right)^b \left(\frac{M}{L^3}\right)^c \left(\frac{M}{LT}\right)^d \left(\frac{L^2}{\theta T^2}\right)^e \left(\frac{ML}{\theta T^3}\right)^f\right]$$

Consider a flow of fluid past a cylinder involving heat transfer. The heat transfer coefficient $h$ is known for certain conditions to depend on the following variables:
Free-stream velocity $V$
Fluid density $\rho$
Fluid viscosity $\mu$
Coefficient of thermal conductivity $k$
Diameter of cylinder $D$
Specific heat $c_p$
What are a set of dimensionless groups for this process? The dimensions for $h$ and $k$ are

$$[h] = \left[\frac{L}{\theta T^3}\right]$$

$$[k] = \left[\frac{F}{T\theta}\right].$$

where recall, $\theta$ is the dimensional representitive of temperature. Note we get a Reynolds number and a Prandtl number, $c_p\mu/k$.

$$\begin{cases} L: & 1 = a+b-3c-d+2e+f \\ M: & 0 = c+d+f \\ T: & -3 = -b-d-2e-3f \\ \theta: & -1 = -e-f \end{cases}$$

$$\begin{cases} e = 1-f \\ d = -c-f \\ a = 1-b+3c-c-f-2+2f-f = -1+2c-b = -2+c \\ b = 3+c+f-2+2f-3f = 1+c \end{cases}$$

$$\therefore \quad h = K_1\left[D^{(-2+c)} V^{(1+c)} \rho^c \mu^{(-c-f)} c_p^{(1-f)} k^f\right] + \dots$$

$$\underset{\pi_1}{\left(\frac{hD^2}{Vc_p}\right)} = f\left[\underset{\pi_2}{\left(\frac{DV\rho}{\mu}\right)}, \underset{\pi_3}{\left(\frac{k}{c_p \mu}\right)}\right]$$

$$\pi_2 = Re$$

$\pi_2^{-1} = Pr$ Prandtl's Number



http://ingesolucionarios.blogspot.com Edu_Zegarr_ch

http://ingesolucionarios.blogspot.com

7.45

A liquid flows between two parallel plates separated by a distance $h$. The average velocity of the liquid is $V_0$. The temperature of one plate is $t_1$ and the other is $t_2$. If, in addition to the above factors, the temperature $t$ of the liquid depends on the distance $y$ above the bottom plate, the viscosity of the liquid, the specific heat $c_p$ of the liquid, and thermal conductivity $k$, what are the dimensionless groups involved to get this temperature? Show that

$$t/t_1 = f\left[y/h, \mu c_p/k, c_p(t_1 - t_2)/V_0^2\right].$$

$$t = f(y, h, c_p, \mu, t_1, t_2, k, V)$$

$$t = K[y^a h^b c_p^c \mu^d t_1^e t_2^f k^g V^h] + \ldots$$

**Dimensionally,**

$$(\theta) = \left[(L)^a (L)^b \left(\frac{FL}{M\theta}\right)^c \left(\frac{M}{LT}\right)^d (\theta)^e (\theta)^f \left(\frac{F}{T\theta}\right)^g \left(\frac{L}{T}\right)^h\right]$$

$$\frac{\left(\dfrac{ML}{T^2}\right)(L)}{M\theta} \qquad \left(\frac{\dfrac{ML}{T^2}}{T\theta}\right)$$

$$\left(\frac{L^2}{T^2\theta}\right) \qquad \left(\frac{ML}{T^3\theta}\right)$$

$$\therefore \quad (\theta) = \left[(L^a)(L)^b \left(\frac{L^2}{T^2\theta}\right)^c \left(\frac{M}{LT}\right)^d (\theta)^e (\theta)^f \left(\frac{ML}{T^3\theta}\right)^g \left(\frac{L}{T}\right)^h\right]$$

**Enforcing dimensional homogeneity:**

$$\begin{cases} L: & 0 = a+b+2c-d+g+h \\ \theta: & 1 = -c+e+f-g \\ T: & 0 = -2c-d-3g-h \\ M: & 0 = d+g \end{cases}$$

$$\therefore \begin{cases} d = -g \\ h = -2c+g-3g = -2c-2g \\ e = 1+c-f+g \\ b = -a-2c-g-g+2c+2g = -a \end{cases}$$

http://ingesolucionarios.blogspot.com

**(cont.)**

$$\therefore \quad (t) = K\left[y^{a}\, h^{(-a)}\, c_p^{\,c}\, \mu^{(-g)}\, t_1^{(1+c-f+g)}\, t_2^{f}\, k^{g}\, V^{(-2c-2g)}\right] + \ldots$$

$$\left(\frac{t}{t_1}\right) = f\left[\left(\frac{y}{h}\right), \left(\frac{c_p t_1}{V^2}\right), \left(\frac{t_1 k}{\mu V^2}\right), \left(\frac{t_2}{t_1}\right)\right]$$

$\pi_1 \quad \pi_2 \quad \pi_3 \quad \pi_4 \quad \pi_5$

$$\pi_3 \times \pi_4^{-1} = \left(\frac{c_p t_1}{V^2}\right)\left(\frac{\mu V^2}{k t_1}\right) = \left(\frac{c_p \mu}{k}\right) = Pr$$

$$(\pi_3)\times(\pi_5) - (\pi_4)(Pr) = \left(\frac{c_p t_1}{V^2}\right)\left(\frac{t_2}{t_1}\right) - \left(\frac{t_1 k}{\mu V^2}\right)\left(\frac{\mu c_p}{k}\right) = \frac{c_p}{V^2}\,(t_2 - t_1)$$

$$\therefore \quad \boxed{\left(\frac{t}{t_1}\right) = f\left[\left(\frac{y}{h}\right), \left(\frac{c_p \mu}{k}\right), \left(\frac{c_p (t_2 - t_1)}{V^2}\right)\right]}$$

http://ingesolucionarios.blogspot.com

The drag of a two-man submarine hull is desired when it is moving far below the free surface of water. A model scaled down one-tenth from the prototype is to be tested. What dimensionless group should be duplicated between model and prototype flows? If the drag of the prototype at 1 kn is desired, at what speed should the model be moved to give the drag to be expected by the prototype?

7.47 a) Reynolds number

b) $$\frac{\rho_M V_M D_M}{\mu} = \frac{\rho_P V_P D_P}{\mu}$$

Use same water.

$$\therefore \quad V_M D_M = V_P D_P$$

$$V_M = (1)\left(\frac{D_P}{D_M}\right) = 10 \; knots$$

Oil having a kinematic viscosity of $6.05 \times 10^{-5}$ ft²/s is flowing through a 10-in pipe. At what velocity would water at 60°F have to flow through the pipe for dynamically similar flow? What is the ratio of drags for corresponding lengths of pipe from the flows? The specific gravity of the oil is 0.8.

7.48 OIL
$$\begin{cases} \nu = 6.05 \times 10^{-5} \; ft^2/sec. \\ D = 10 \; in. \end{cases}$$

WATER
$$\begin{cases} \nu = 1.217 \times 10^{-5} \; ft^2/sec \\ D = 10 \; in. \end{cases}$$

a) Duplicating Reynolds number means that:

$$\left(\frac{VD}{\nu}\right)_{oil} = \left(\frac{VD}{\nu}\right)_{water}$$

$$\therefore \quad V_{water} = \left(\frac{1.217}{6.05}\right) V_{oil} = .2012 \; V_{oil}$$

b) Because $F/D^2$ is proportional to some characteristic pressure, equating Euler numbers:

$$\left(\frac{F}{\rho V^2 D^2}\right)_{oil} = \left(\frac{F}{\rho V^2 D^2}\right)_{water}$$

$$\therefore \quad \left(\frac{F_{oil}}{F_{water}}\right) = \frac{(.8)(62.4)}{(1)(62.4)} \left(\frac{V_{oil}}{V_{water}}\right)^2$$

$$\frac{F_{oil}}{F_{water}} = (.8)\left(\frac{1}{.2012}\right)^2 = 19.76$$

http://ingesolucionarios.blogspot.com

7.49 We equate the **Froude** numbers here.

$$\left(\frac{V^2}{Lg}\right)_P = \left(\frac{V^2}{Lg}\right)_M$$

The wave resistance of an ocean liner scaled down $\frac{1}{100}$ is to be measured. If the drag of the prototype at 20 kn is desired, what must the speed of the model be? Ascertain the ratio of the drag forces between model and prototype.

$$V_M^2 = (400)\left(\frac{L_M}{L_P}\right) = 4 \qquad V_M = 2\ knots$$

We equate the **Euler** numbers.

$$\left(\frac{p}{\rho V^2}\right)_P = \left(\frac{p}{\rho V^2}\right)_M$$

But

$$p \propto \frac{F}{D^2}$$

where $F$ can be taken as a drag force and $D$ is a characteristic length.

Hence we have:

$$\left(\frac{F}{\rho V^2 D^2}\right)_P = \left(\frac{F}{\rho V^2 D^2}\right)_M$$

$$\therefore \quad \frac{F_P}{F_M} = \left(\frac{V_P}{V_M}\right)^2 \left(\frac{D_P}{D_M}\right)^2$$

$$\boxed{\left(\frac{F_P}{F_M}\right) = (10)^2(100)^2 = 10^6}$$

7.50 Duplicate **Reynolds No.**

A *Venturi meter* is a device for measuring flow in a pipe. It is merely a section of pipe having a reduced diameter.* Suppose a model is one-tenth the size of the prototype. If the diameter of the model is 60 mm and the approach velocity is 5 m/s, what is the discharge in liters per second in the prototype for dynamic similarity? The kinematic viscosity in the model fluid is 0.9 times the kinematic viscosity of the prototype fluid.

$$\left(\frac{VD}{\nu}\right)_M = \left(\frac{VD}{\nu}\right)_P$$

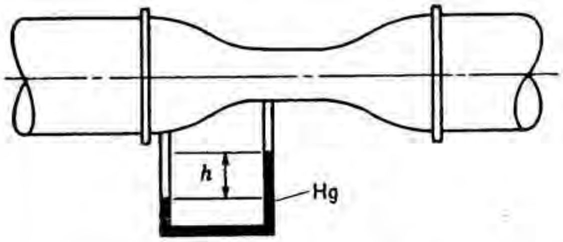


$$\left(\frac{(5)(.06)}{.9\nu}\right)_M = \frac{V_P(10)(.06)}{\nu}$$

$$\therefore \quad V_P = .556\ m/\text{sec}$$

$$q = V_P A = (.556)\,\frac{(\pi)(.6)^2}{4} = .1572\ m^3/s = \boxed{157.2\ L/s}$$

http://ingesolucionarios.blogspot.com

7.51

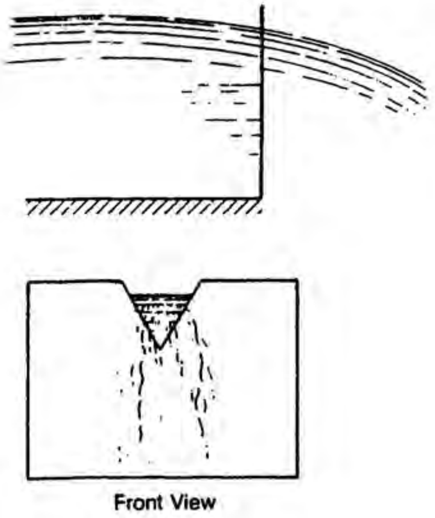

8.51. A V-notch *weir* is a vertical plate with a V notch through which fluid in a channel flows. If the shape of the free surface is vital in governing the flow, what $\pi$ should be duplicated between the flows of a model and a prototype? If a model is one-fiftieth the size of the prototype and the free-stream velocity upstream is 10 ft/s for the prototype, what should the free-stream velocity be for the model? What is the ratio of force on the weir between model and prototype?

a) The **Froude No.** must be duplicated

$$\left(\frac{V_0^2}{Lg}\right)_P = \left(\frac{V_0^2}{Lg}\right)_M$$

$$\frac{100}{L_P} = \frac{(V_0^2)_M}{\left(\frac{1}{50}\right)(L_P)}$$

$$(V_0)_M = \sqrt{(100)\left(\frac{1}{50}\right)} = 1.414\ ft/\text{sec}$$

b) Also the **Euler No.** is duplicated.

$$\left(\frac{p}{\rho V^2}\right)_M = \left(\frac{p}{\rho V^2}\right)_P$$

$$\left(\frac{\frac{F}{L^2}}{V^2}\right)_M = \left(\frac{\frac{F}{L^2}}{V^2}\right)_P$$

$$\frac{F_p}{F_m} = \left(\frac{V_p}{V_m}\right)^2\left(\frac{L_p}{L_m}\right)^2 = \left(\frac{100}{2}\right)(50)^2 = 125000$$

http://ingesolucionarios.blogspot.com

7.52

A model of a submarine is scaled down to one-twentieth the size of the prototype and is to be tested in a wind tunnel where at free stream $p = 300$ lb/in$^2$ absolute and $t = 120$°F. The speed of the prototype at which we are to estimate the drag is 15 kn. What should the free-stream velocity of the air be in the wind tunnel? What will be the ratio of the drags between model and prototype? Explain why, despite the high pressure in the wind tunnel, we can consider the *flow* to be incompressible. The following is given:

$$\left(\frac{\mu}{\rho}\right) \text{ for seawater} = 1.121 \times 10^{-5} \text{ ft}^2/\text{s}$$

Explain why you would not have dynamic similarity if the submarine prototype moved near the free surface.

$$Scale = \frac{1}{20} \qquad p = 300\,psia \qquad T = 120°\,F \qquad V_P = 15\ knots$$

$$\nu = \left(\frac{\mu}{\rho}\right)_{SEA\ WATER} = 1.121 \times 10^{-5}\ ft^2/sec$$

We must duplicate **Reynolds** number. $\left(\frac{\rho VD}{\mu}\right)_M = \left(\frac{\rho VD}{\mu}\right)_P$

$$\therefore \left(\frac{\rho V}{\mu}\right)_M = \frac{(15)(20)}{1.121 \times 10^{-5}} = 2.67 \times 10^7 \qquad (1)$$

We must get $\rho$ and $\mu$ for air in wind tunnel.

$$\mu_M = 4.2 \times 10^{-7}\ lb\text{-}sec/ft^2$$

$$\rho_M = \frac{p}{RT} = \frac{(300)(144)}{(53.3)(32.2)(580)} = .0434\ \frac{slugs}{ft^3}$$

Going back to Eq. 1 we have:

$$V_M = \frac{(2.67 \times 10^7)(4.2 \times 10^{-7})}{.0434} = 258\ knots$$

The free stream speed is only 258 knots and compressibility affects on a slim profile such as the submarine should be small.

Near the free surface you would also have to duplicate the **Froude** number, as well as the **Reynolds** number.

$$\left(\frac{V^2}{Lg}\right)_M = \left(\frac{V^2}{Lg}\right)_P$$

**But:** $$\left[\frac{258^2}{(1)g}\right] \neq \left[\frac{15^2}{(20)g}\right]$$

$\therefore$ no similarity.

http://ingesolucionarios.blogspot.com

7.53

A long cylinder is immersed in a large tank of liquid. The diameter of the cylinder is $D$ and the viscosity of the liquid is $\mu$. If the cylinder is spun slowly about its centerline at a speed $\omega$ rad/s, what dimensionless group or groups represent the torque per unit length $T$ from viscous action? Suppose the data for a model of this system is known to be

$$D_M = 0.02 \text{ m}$$
$$\mu_M = 4.79 \times 10^{-4} \text{ N-s/m}^2$$
$$\omega_M = 3 \text{ r/min}$$
$$T_M = 0.2 \text{ N-m/m}$$

What will the torque per unit length $T_P$ be for a prototype with the following data

$$D_P = 0.6 \text{ m}$$
$$\mu_P = 6 \times 10^{-4} \text{ N-s/m}^2$$
$$\omega_P = 0.2 \text{ r/min}$$

$$T = f(\mu, D, \omega)$$

$$T = K[\mu^a D^b \omega^c] + \ldots$$

**Dimensionally**

$$\left(\frac{FL}{L}\right) = \left(\frac{M}{LT}\right)^a (L)^b \left(\frac{1}{T}\right)^c$$

For *MLT* system

$$\left(\frac{ML}{T^2}\right) = \left(\frac{M}{LT}\right)^a (L)^b \left(\frac{1}{T}\right)^c$$

**Now enforce dimensional homogeneity**

$$\begin{cases} M: & 1 = a \\ L: & 1 = -a + b \\ T: & -2 = -a - c \end{cases}$$

**Hence:**

$$a = 1$$
$$b = 1 + a = 2$$
$$c = 2 - a = 1$$

$$\therefore \quad T = K[\mu^1 D^2 \omega^1] + \ldots$$

$$\therefore \quad \pi_1 = \left(\frac{T}{\mu D^2 \omega}\right)$$

**For dynamic similarity**

$$\left(\frac{T}{\mu D^2 \omega}\right)_P = \left(\frac{T}{\mu D^2 \omega}\right)_M$$

$$\frac{T_P}{(6\times10^{-4})(.6)^2(.2)} = \frac{.2}{(4.79\times10^{-4})(.02)^2(3)}$$

$$\boxed{T_P = 15.03 \ N\text{-}m/m}$$

http://ingesolucionarios.blogspot.com

7.54

A centrifugal pump is rated at 50 $m^3/s$ at 1750 r/min with a head if 30 m. What is the flow rate and head if the speed is changed to 1250 r/min?

$$\begin{cases} Q_1 = 50\ m^3/s \\ N_1 = 1{,}750\ RPM \\ (\Delta H_D)_1 = 30\ m \end{cases} \qquad \begin{cases} Q_2 = ? \\ \Delta H_D = ? \\ N_2 = 1{,}250\ RPM \end{cases}$$

$$\nu_1 = \nu_2$$

$$D_1 = D_2$$

Equate the following dimensionless groups:

$$\left(\frac{Q}{ND^3}\right)_1 = \left(\frac{Q}{ND^3}\right)_2$$

$$\frac{50}{(1{,}750)(D_1^3)} = \frac{Q_2}{(1{,}250)(D_2^3)}$$

$$\boxed{Q_2 = 35.7\ m^3/s}$$

Also

$$\left(\frac{\Delta H_D}{D}\right)_1 = \left(\frac{\Delta H_D}{D}\right)_2$$

$$30 = (\Delta H_D)_2$$

$$\boxed{(\Delta H_D)_2 = 30\ m}$$



http://ingesolucionarios.blogspot.com Edu_Zegarr_ch

http://ingesolucionarios.blogspot.com

7.55 We know from **dimensional analysis** $f\left(\frac{Q}{ND^3}, \frac{\Delta H_D}{D}, \frac{g}{N^2D}, \frac{ND^2}{\nu}\right) = 0$

$\therefore$ All but one must be duplicated.

A pump on the earth's surface delivers 10 m³/s of water at 60°C while rotating at 1750 r/min. It has a head of 20 m and the diameter of the impeller is 0.4 m. On a space vehicle a geometrically similar pump ¾ the size pumps oil of kinematic viscosity 3 × 10⁻⁶ m²/s at a rotational speed of 1450 r/min. At what distance *d* from the earth's surface will there be possible dynamic similarity between space and earth pump flows? Determine the volume flow and head for the space pump. (The radius of the earth is 6372 km.)

| DATA: | On Earth | On Space Vehicle |
|---|---|---|
| | $Q_E = 10\ m^3/s$ | $Q_S = ?$ |
| | $D_E = .4\ m$ | $H_D = ?$ |
| | $\nu_E = .477\times10^{-6}\ m^2/s$ | $\nu_S = 3\times10^{-6}\ m^2/s$ |
| | $N_E = 1{,}750\ RPM$ | $N_S = 1{,}450\ RPM$ |
| | $H_D = 20\ m$ | $D_S = \left(\frac{3}{4}\right)(.4) = .3\ m$ |
| | $g_E = 9.806\ m/s^2$ | $g_S = (9.806)\left(\frac{6{,}372}{6{,}372+d}\right)^2$ |

**For dynamic similarity** $\left(\frac{Q}{ND^3}\right)_E = \left(\frac{Q}{ND^3}\right)_S$

$$\frac{10}{(1{,}750)(.4)^3} = \frac{Q_S}{(1{,}450)(.3)^3}$$

$$\boxed{Q_S = 3.496\ m^3/s}$$

**Also** $\left(\frac{g}{N^2D}\right)_E = \left(\frac{g}{N^2D}\right)_S$

$$\frac{9.806}{(1{,}750^2)(.4)} = \frac{(9.806)\left[\frac{6{,}372}{(6{,}372+d)^2}\right]}{(1{,}450)^2(.3)} \qquad 6{,}372 + d = \frac{(1{,}750)(.4)^{\frac{1}{2}}(6{,}372)}{(1{,}450)(.3)^{\frac{1}{2}}}$$

$$\boxed{d = 2{,}508\ km}$$

$$\left(\frac{\Delta H_D}{D}\right)_E = \left(\frac{\Delta H_D}{D}\right)_S \qquad \left(\frac{20}{.4}\right) = \frac{(\Delta H_D)_S}{.3}$$

$$\boxed{\Delta H_D = 15\ m}$$

7.56

A barge is towed at a speed of 3 m/s. The width is 20 m. In a towing tank a model scaled down $\frac{1}{30}$ is being tested. What should the ratio of drags be if we duplicate wave drag with the idea that we will correct for skin friction drag later? Take $\rho$ of water in both cases as 1000 kg/m³ and $\nu = 0.0113 \times 10^{-4}$ m²/s for prototype and model.

We must duplicate the **Froude** number:

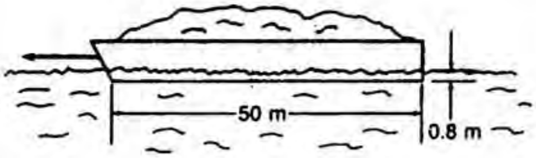


$$\therefore \left(\frac{V^2}{Lg}\right)_M = \left(\frac{V^2}{Lg}\right)_P$$

$$\frac{V_M^2}{\left(\frac{1}{30}\right)Lg} = \frac{3^2}{Lg}$$

$$V_M = .5477 \ m/s$$

Look at **Euler Number.**

$$\left(\frac{\Delta p}{\rho V^2}\right)_M = \left(\frac{\Delta p}{\rho V^2}\right)_P$$

$$\Delta p \propto \left(\frac{D}{L^2}\right)$$

$$\therefore \left(\frac{D}{\rho V^2 L^2}\right)_M = \left(\frac{D}{\rho V^2 L^2}\right)_P$$

$$\frac{D_P}{D_M} = \frac{(\rho V^2 L^2)_P}{(\rho V^2 L^2)_M} = \frac{(3^2)(L^2)}{(.5477)^2\left(\frac{1}{30}L\right)^2} = 2.700\times10^4$$

$$\boxed{\frac{D_P}{D_M} = 2.7\times10^4}$$

http://ingesolucionarios.blogspot.com

7.57

A transport plane is expected to fly at 550 mi/h at an elevation of 30,000 ft standard atmosphere. A model of this plane scaled down to $\frac{1}{15}$ of the prototype is to be tested in a wind tunnel at a temperature of 70°F. To duplicate both *Reynolds* and *Mach* numbers, what is the tunnel *velocity* and the tunnel *pressure* absolute? Take $\mu_{air}$ for prototype as $2 \times 10^{-7}$ lb · s/ft². Take $\mu_{air}$ for model as $4.2 \times 10^{-7}$ lb · s/ft². The speed of sound for a perfect gas is $\sqrt{kRT}$.

At 30,000 *ft*

$$\begin{cases} T = -48°F = 412°R \\ p = 628.4 \ psf \\ \rho = (.3741)(.002378) = .000890 \ slugs/ft^3 \\ c = 995 \ ft/sec \end{cases}$$

Look at *Re* first.

$$(Re)_P = \left(\frac{\rho VD}{\mu}\right)_P = \frac{(.000890)(550)(L_p)}{2\times10^{-7}}$$

$$(Re)_P = \left(\frac{\rho VD}{\mu}\right)_M = \frac{(\rho_M)(V_M)\left(\frac{1}{15}L_P\right)}{4.2\times10^{-7}}$$

$$= \frac{\left(\frac{p_M}{RT_M}\right)(V_M)\left(\frac{1}{15}\right)L_P}{4.2\times10^{-7}} = \frac{(p_M)(V_M)\left(\frac{1}{15}\right)L_P}{(53.3)(32.2)(530)(4.2\times10^{-7})}$$

Hence

$$\frac{p_M V_M\left(\frac{1}{15}\right)L_P}{(53.3)(32.2)(530)(4.2\times10^{-7})} = \frac{(.000890)(550)(L_P)}{2\times10^{-7}}$$

$$p_M V_M = 1.403\times10^{-7} \qquad (1)$$

Go to **Mach No.** next.

$$\frac{V_M}{\sqrt{kRT_M}} = \left(\frac{550}{995}\right)_P$$

$$\therefore \quad \frac{V_M}{\sqrt{(1.4)(53.3)(32.2)(530)}} = \left(\frac{550}{995}\right)$$

$$\boxed{V_M = 623.8 \ mi/hr} \qquad (2)$$

From (1)

$$p_M = \frac{1.403\times10^7}{623.8} = 22,490 \ psf$$

$$\boxed{p_M = 156.2 \ psi}$$

http://ingesolucionarios.blogspot.com

7.58

A prototype of a boat of length 100 ft is to move at a speed of 10 kn in fresh water where $\mu = 2.10 \times 10^{-5}$ lbf-s/ft$^2$ and $\rho = 62.4$ lbm/ft$^3$. A model scaled down $\frac{1}{20}$ of the prototype is to be tested in a towing tank. For dynamic similarity what three dimensionless groups must be duplicated?
(a) Find proper $V$ of model
(b) Find proper kinematic viscosity of liquid in the towing tank
(c) Find ratio of drags
Keep $\rho$ the same for model and prototype.

a) Froude, Reynolds and Euler

$$\left(\frac{V^2}{Lg}\right)_P = \left(\frac{V^2}{Lg}\right)_M$$

$$\frac{10^2}{100g} = \frac{V_M^2}{\left(\frac{1}{20}\right)(100)g} \qquad V_M = 2.236\ kn$$

b)

$$\left(\frac{\rho VD}{\mu}\right)_M = \left(\frac{\rho VD}{\mu}\right)_P$$

$$\frac{\mu}{\rho} = \nu \qquad \nu_P = \frac{2.10\times10^{-5}}{1.938} = 1.0836\times10^{-5}$$

$$\therefore \left(\frac{VD}{\nu}\right)_P = \left(\frac{VD}{\nu}\right)_M$$

$$\frac{10(L_P)}{1.0836\times10^{-5}} = \frac{2.236\left(\frac{1}{20}L_P\right)}{\nu_M}$$

$$\nu_M = 1.2115\times10^{-5}$$

c)

$$\left(\frac{\Delta p}{\rho V^2}\right)_M = \left(\frac{\Delta p}{\rho V^2}\right)_P$$

$$\left(\frac{\frac{F}{D^2}}{\rho V^2}\right)_M = \left(\frac{\frac{F}{D^2}}{\rho V^2}\right)_P$$

$$\frac{F_M}{F_D} = \frac{(D^2\rho V^2)_M}{(D^2\rho V^2)_P} = \frac{\left(\frac{1}{20}L_P\right)^2(2.236)^2}{L_P^2(10)^2} = 1.250\times10^{-4}$$

http://ingesolucionarios.blogspot.com

**7.59**

The model of a submarine is scaled to $\frac{1}{30}$ of the full scale size of the prototype. The speed of the full scale submarine is to be 20 kn while at the free surface of sea water where

$$(\nu)_{\text{sea water}} = 1.210 \times 10^{-5}\ \text{ft}^2/\text{s}$$

$$(\rho)_{\text{sea water}} = 1.940\ \text{lbm/ft}^3$$

In the towing tank, where $\nu = 1.217 \times 10^{-5}\ \text{ft}^2/\text{s}$ and $\rho = 1.938\ \text{lbm/ft}^3$ what should be the free-stream velocity for movement at the free surface? What is the ratio of drags? Next, the submarine is considered to move much below the free surface at a speed of .5 kn. In a water tunnel, what should be the speed and the ratio of drags? Take $\nu = 1.217 \times 10^{-5}\text{ft}^2/\text{s}$ again.

**PART A** Equate **Froude Numbers.**

$$\left(\frac{V^2}{Lg}\right)_M = \left(\frac{V^2}{Lg}\right)_P \qquad \therefore \quad V_M^2 = V_P^2 = \left(\frac{L_M}{L_P}\right) = 20^2\left(\frac{1}{30}\right)$$

$$\boxed{V_M = 3.65\ kn}$$

Equate **Euler Numbers.**

$$\left(\frac{\Delta p}{\rho V^2}\right)_M = \left(\frac{\Delta p}{\rho V^2}\right)_P$$

$$\therefore \quad \left(\frac{\frac{F}{D^2}}{\rho V^2}\right)_M = \left(\frac{\frac{F}{D^2}}{\rho V^2}\right)_P$$

$$\frac{F_M}{F_P} = \frac{(\rho V^2 D^2)_M}{(\rho V^2 D^2)_P} = \frac{(1.938)(3.65)^2\left(\frac{1}{30}\,L_P\right)^2}{(1.940)(20^2)(L_P^2)}$$

$$\boxed{\frac{F_M}{F_P} = 3.701\times 10^{-5}}$$

**PART B** Equate **Reynolds Numbers.**

$$\left(\frac{\rho VD}{\mu}\right)_M = \left(\frac{\rho VD}{\mu}\right)_P$$

Use $\nu = \dfrac{\mu}{\rho}$

$$\therefore \quad \left(\frac{VD}{\nu}\right)_M = \left(\frac{VD}{\nu}\right)_P$$

$$V_M = \frac{V_P \nu_M L_P}{\nu_P\left(\frac{1}{30}\,L_P\right)} = \frac{(.5)(1.217\times 10^{-5})(30)}{(1.210\times 10^{-5})}$$

$$\boxed{V_M = 15.09\ kn}$$

http://ingesolucionarios.blogspot.com

(cont.) **Equate Euler Numbers.**

$$\left(\frac{\Delta p}{\rho V^2}\right)_M = \left(\frac{\Delta p}{\rho V^2}\right)_P$$

$$\left(\frac{\dfrac{F}{D^2}}{\rho V^2}\right)_M = \left(\frac{\dfrac{F}{D^2}}{\rho V^2}\right)_P$$

$$\frac{F_M}{F_P} = \frac{\rho_M V_M^2 \left(\frac{1}{30} L_P\right)^2}{\rho_P V_P^2 (L_P)^2} = \frac{(1.938)(15.09)^2 \left(\frac{1}{900}\right)}{(1.940)(.5)^2}$$

$$\boxed{\frac{F_M}{F_P} = 1.011}$$

7.60 We must **duplicate Froude Numbers.**

Wave motion along a section of coast is to be studied experimentally in the laboratory using a geometrically similar geometry reduced by a factor of 20. The density of ocean water is 1030 kg/m³ and the laboratory fresh water is 1000 kg/m³. If we neglect surface tension and friction, what is the wave velocity in the model if the wave velocity in the prototype is 0.15 m/s. What is the ratio of force between prototype and model for these flows?

$$\left(\frac{V}{\sqrt{Lg}}\right)_M = \left(\frac{V}{\sqrt{Lg}}\right)_P = \left(\frac{.15}{\sqrt{20gL_M}}\right)$$

$$\boxed{V_M = \frac{.15}{\sqrt{20}} = .03354 \ m/s}$$

Now go to **Euler Numbers.**

$$\left(\frac{\dfrac{F}{L^2}}{\rho V^2}\right)_M = \left(\frac{\dfrac{F}{L^2}}{\rho V^2}\right)_P$$

$$\left(\frac{F_M}{F_P}\right) = \frac{\rho_M V_M^2 L_M^2}{\rho_P V_P^2 (20 L_M)^2} = \frac{(1{,}000)(.03354)^2}{(1{,}030)(.15)^2(400)} = 1.214\times10^{-4}$$

$$\boxed{\left(\frac{F_M}{F_P}\right) = 1.214\times10^{-4}}$$

http://ingesolucionarios.blogspot.com

**7.61** Make a dimensional anlaysis of the mixer

A set of blades is used to mix crude oil in a large tank well below the free surface at a temperature of 20°C at an angular speed $\omega$ of 0.2 rad/s. A geometrically similar model of this device reduced by a scale factor of $\frac{1}{3}$ is run at a speed $\omega_M$ required for dynamic similarity in the large tank of water well below the free surface at a temperature of 60°C. If the model requires a torque of 0.4 N-m, what are the torque and power for the prototype?

$$T = f(D, \mu, \rho, \omega)$$

$$T = K\left[D^a \mu^b \rho^c \omega^d\right] + \ldots$$

Dimensionally,

$$(FL) = (L)^a \left(\frac{M}{LT}\right)^b \left(\frac{M}{L^3}\right)^c \left(\frac{1}{T}\right)^d$$

$$\left(\frac{ML^2}{T^2}\right) = (L)^a \left(\frac{M}{LT}\right)^b \left(\frac{M}{L^3}\right)^c \left(\frac{1}{T}\right)^d$$

Enforce dimensional homogeneity.

$$\begin{cases} M: & 1 = b + c \\ T: & -2 = -b - d \\ L: & 2 = a - b - 3c \end{cases}$$

$$\begin{cases} c = 1 - b \\ d = 2 - b \\ a = 2 + b + 3(1 - b) = 5 - 2b \end{cases}$$

$$M_z = K_1\left[D^{(5-2b)} \mu^b \rho^{(1-b)} \omega^{(2-b)}\right] + \ldots$$

$$\left(\frac{M_z}{D^5 \rho \omega^2}\right) = K_1\left[\left(\frac{\mu}{D^2 \rho \omega}\right)\right] + \ldots$$

$$\frac{M_z}{D^5 \rho \omega^2} = G\left[\underbrace{\left(\frac{\mu}{D^2 \rho \omega}\right)}_{(Re)^{-1}}\right]$$

We duplicate **Reynolds Numbers.**

http://ingesolucionarios.blogspot.com Edu_Zegarr_ch

(cont.)

$$\left(\frac{\mu}{D^2\rho\omega}\right)_P = \left(\frac{\mu}{D^2\rho\omega}\right)_M$$

$$\therefore \left(\frac{\nu}{D^2\omega}\right)_P = \left(\frac{\nu}{D^2\omega}\right)_M \qquad \frac{(.0929)(10^{-4})}{(D^2)(.2)} = \frac{(.0929)(5\times10^{-5})}{\left(\frac{1}{5}D\right)^2(\omega_M)}$$

$$\omega_M = \frac{(5\times10^{-5})(25)(.2)}{10^{-4}} = 2.5 \ rad/s$$

$$\boxed{\omega_M = 2.5 \ rad/s}$$

Also

$$\left(\frac{M_z}{D^5\rho\omega^2}\right)_P = \left(\frac{M_z}{D^5\rho\omega^2}\right)_M$$

$$\frac{(M_z)_P}{(5D_M)^5(\rho_P)(.2)^2} = \frac{.4}{(\ D_M)^5(\rho_M)(2.5)^2}$$

$$\rho_P = \left(\frac{\mu}{\nu}\right)_P = \frac{(1.7\times10^{-4})(47.9)}{(.0929)(10^{-4})}$$

$$\rho_M = \left(\frac{\mu}{\nu}\right)_M = \frac{(8\times10^{-5})(47.9)}{(.0929)(5\times10^{-5})}$$

$$\frac{(M_z)_P}{(5)^5\,\frac{(1.7\times10^{-4})(47.9)}{(.0929)(10^{-4})}\,(.2)^2} = \frac{.4}{\frac{(8\times10^{-5})(47.9)}{(.0929)(5\times10^{-5})}\,(2.5)^2}$$

$$\boxed{(M_z)_P = 8.50 \ N\text{-}m}$$

$$\boxed{POWER = (8.50)(2.50) = 21.25 \ WATTS}$$

http://ingesolucionarios.blogspot.com

7.62 Too slow for compressible effects. $\therefore$ Don't worry about Mach No.

Duplicate **Reynolds Numbers.**

We wish to determine the wind force on a water tower when a wind normal to the centerline of the water tower is 60 km/h. To do this we examine in a water tunnel a geometrically similar model reduced by $\frac{1}{20}$ scale. What should the water tunnel velocity be if the static temperatures of both prototype and model flows are the same, namely 60°C? What is the ratio of bending moments about the base of the building?

$$\left(\frac{VL}{\nu}\right)_P = \left(\frac{VL}{\nu}\right)_M$$

$$\frac{(60)(L_M)(20)}{(.0929)(2.1\times10^{-4})} = \frac{V_M L_M}{(.477\times10^{-6})}$$

$$V_M = 29.34 \ km/hr = 8.150 \ m/s$$

Go to **Euler No.**

$$\left(\frac{\frac{F}{L^2}}{\rho V^2}\right)_P = \left(\frac{\frac{F}{L^2}}{\rho V^2}\right)_M$$

For $\rho_{AIR}$ use **Eq. of State.**

$$\rho = \frac{p}{RT} = \frac{101{,}325}{(287)(273+60)} = 1.060 \ kg/m^3$$

$$\therefore \quad \frac{\frac{F_P}{20^2}}{(1.060)(60^2)} = \frac{\frac{F_M}{1^2}}{(983.2)(29.34)^2}$$

$$\boxed{\frac{F_P}{F_M} = 1.803}$$

For **bending moment**

$$\frac{(F_P)(L_P)}{(F_M)(L_M)} = (1.803)\left(\frac{20}{1}\right) = \boxed{36.07}$$

7.63

We wish to model an irrigation canal reduced by $\frac{1}{20}$ scale. Water is flowing in the canal at a speed of 1 m/s at a temperature of 30°C. If we are to duplicate *both* Reynolds and Froude numbers, what must be the kinematic viscosity of the model flow?

**Reynolds Number**

$$\left(\frac{VL}{\nu}\right)_P = \left(\frac{VL}{\nu}\right)_M$$

$$\frac{(1)(20)}{.804\times10^{-6}} = \frac{V_M(1)}{\nu_M}$$

$$\therefore \quad V_M = 2.488\times10^{7}\,\nu_M \qquad (1)$$

**Froude Number**

$$\left(\frac{V^2}{Lg}\right)_P = \left(\frac{V^2}{Lg}\right)_M$$

$$\frac{(1)^2}{(20)(g)} = \frac{V_M^2}{(1)(g)}$$

$$V_M = .2236\ m/s$$

$$\therefore \quad \nu_M = \frac{(.2236)}{2.488\times10^{7}} = 8.987\times10^{-9}\ m^2/s$$

7.64 The **Mach** numbers should be duplicated. From the standard atmosphere table in the appendix, we see that for the prototype

> The model of an airfoil reduced to one-twentieth of the prototype is to be tested in a wind tunnel where the temperature is 70°F and the pressure is atmospheric. If the prototype is to fly at 500 mi/h at 5000 ft in the standard atmosphere, what should the velocity be in the wind tunnel for dynamic similarity considering only compressibility? What should the ratio of drags be for model to prototype? The velocity of sound in a perfect gas is $\sqrt{kRT}$, where for air $k = 1.4$, $R = 53.3$ ft · lb/(lbm)(°R), and $T$ is the absolute temperature. Take $\rho$ of air in the wind tunnel to be 0.002378 slug/ft³.

$$c = 1{,}098 \ \ ft/sec$$

Hence, the Mach number for prototype is:

$$M_P = \frac{(500)\left(\frac{5{,}280}{3{,}600}\right)}{1{,}098} = .668$$

Hence for the model

$$M_M = \left(\frac{V_M}{c_M}\right) = .668$$

But

$$c_M = \sqrt{(1.4)(53.3)(32.2)(460+70)} = 1{,}128 \ \ ft/sec$$

$$V_M = (.668)(1{,}128) = 754 \ \ ft/sec = 514 \ \ mph$$

As for the ratio of the drags we equate **Euler** numbers.

$$\left(\frac{\Delta p}{\rho V^2}\right)_M = \left(\frac{\Delta p}{\rho V^2}\right)_P$$

$$\Delta p = \left(\frac{D}{L^2}\right)$$

$$\therefore \quad \left(\frac{\frac{D}{L^2}}{\rho V^2}\right)_M = \left(\frac{\frac{D}{L^2}}{\rho V^2}\right)_P$$

Note from standard atmosphere tables.

$$\rho_P = (.862)(.002378) \ \ slugs/ft^3$$

For the model flow take

$$\rho_M = .002378 \ \ slugs/ft^3$$

$$\therefore \quad \frac{D_M}{D_P} = \frac{\left(\frac{1}{20}\right)^2}{(.862)\left(\frac{500}{514}\right)^2} = 3.065 \times 10^{-3}$$

http://ingesolucionarios.blogspot.com

7.65

In Prob.7.64, consider the prototype to be moving at a speed of 150 mi/h at ground level. If we used the wind tunnel under conditions described above to measure the drag of the model, at what speed should the flow be to have dynamic similarity where viscous effects are significant? Considering the required velocity $V_M$, why is such a test not meaningful? Explain why for such tests one must have highly compressed air in the wind tunnel or use a water tunnel? Take $\rho$ for model and prototype flows to be equal. Similarly, for $\mu$.

Here we want to duplicate **Reynolds No.** between the flows. For the prototype:

$$(Re)_P = \frac{\rho VD}{\mu} = \frac{(\rho)(150)\left(\frac{5,280}{3,600}\right)(20L_M)}{\mu}$$

For the model flow

$$(Re)_M = \frac{(\rho)(V_M)\left(\frac{5,280}{3,600}\right)(L_M)}{\mu}$$

$$\therefore \quad V_M = (20)(150) = 3,000 \quad mi/hr$$

At this speed in the wind tunnel we would have compressibility effects dominating and not viscous effects. The results would not be meaningful. To overcome this, we would have to increase $(\rho)_M$ by having a high pressure in the wind tunnel or use a fluid such as water in a water tunnel.



http://ingesolucionarios.blogspot.com Edu_Zegarr_ch

http://ingesolucionarios.blogspot.com

7.66 We have for the prototype flow

We wish to use a model of an airfoil which is one-tenth the size of the prototype. The prototype is at a speed of 150 km/h in the process of landing where $T$ of the air is 25°C. Because viscous effects are significant here, we will test the model in a water tunnel. What speed should we have if for the water the temperature is 50°C and the pressure is atmospheric at free stream? What is the ratio of lifts for the prototype to the model? At larger angles of attack, what must you be concerned with in this kind of a test?

$$(Re)_P = \left(\frac{\rho VD}{\mu}\right) = \frac{(150)\left(\frac{1,000}{3,600}\right)(10L_M)}{1.8\times 10^{-5}}$$

As for the model flow, we have using Table B3

$$(Re)_M = \frac{(V_M)\left(\frac{1,000}{3,600}\right)(L_M)}{.556\times 10^{-6}}$$

Equating the Reynolds numbers we get

$$V_M = 46.3\ km/hr = 12.87\ m/sec$$

At large angles of attack we would have to be concerned with cavitation for the water flow.

$$\rho_P = \frac{p}{RT} = \frac{101,325}{(287)(273+25)} = 1.185\ kg/m^3$$

Equate **Euler** numbers

$$\left(\frac{p}{\rho V^2}\right)_P = \left(\frac{p}{\rho V^2}\right)_M$$

$$\left(\frac{\frac{F}{L^2}}{\rho V^2}\right)_P = \left(\frac{\frac{F}{L^2}}{\rho V^2}\right)_M$$

$$\frac{\frac{F_P}{100L_M^2}}{(1.185)(150)^2} = \frac{\frac{F_M}{L_M^2}}{(988.1)(46.3)^2}$$

$$\frac{F_P}{F_M} = \frac{(1.185)(100)(150)^2}{(988.1)(46.3)^2} = \boxed{1.259}$$

7.67

Suppose in Probs. 7.9 and 7.16 that we exclude viscosity from the variables determining the power required to drive a propeller. A model of a propeller which is 2 ft in length is scaled down to one-fifth of the full-scale propeller. If the model requires 5 hp, what is the power needed for the full-scale propeller rotating at a speed of 150 r/min. The full-size propeller is to operate at 30,000 ft in the standard atmosphere at a free-stream speed of 300 mi/h. What free-stream speed should we use for the model test? What is the angular speed for the model? Take $T_\infty$ = 59°F.

$$\frac{P}{D^5 \rho \omega^3} = f\left(Re, M, \frac{D\omega}{c}\right)$$

$$\frac{P}{D^5 \rho \omega^3} = f\left(M, \frac{D\omega}{c}\right)$$

**For prototype flow**

$$\left(\frac{V}{c}\right)_P = \frac{(300)\left(\frac{5{,}280}{3{,}600}\right)}{(995)} = .4422$$

**For model flow**

$$\left(\frac{V}{c}\right)_M = \frac{V_M}{1{,}117} = .4422$$

$$\therefore \quad V_M = 493.95\ ft/\text{sec} = 336.8\ mi/hr$$

Also

$$\left(\frac{D\omega}{c}\right)_M = \left(\frac{D\omega}{c}\right)_P$$

$$\frac{(1)\omega_M}{1{,}117} = \frac{(5)(150)}{995} \qquad \omega_M = 842\ rpm$$

Finally

$$\left(\frac{P}{D^5 \rho \omega^3}\right)_M = \left(\frac{P}{D^5 \rho \omega^3}\right)_P$$

$$\left[\frac{5}{(1)(\rho_0)(842)^3}\right] = \left[\frac{P_P}{(5^5)[.374\rho_0](150)^3}\right]$$

$$\boxed{P_P = 33.0\ hp}$$

http://ingesolucionarios.blogspot.com

In Example 7.3 determine the indicated dimensionless groups presented in the example. Consider the following characteristics of the model.

$$P_m = 5\text{ kW}$$
$$Q_m = 5\text{ L/s}$$
$$\Delta H_m = 2\text{ m}$$
$$N_m = 900\text{ r/min}$$
$$D_m = 800\text{ mm}$$

If the full-scale pump is to deliver 50 kW of power at a speed of 400 r/min, what should the scale factor for the full-scale pump be? What are the head and the volumetric flow for the full-scale pump?

7.68 First we will dimensionally analyze the process. Thus:

$$P = f(\rho, N, D, H_D, Q)$$

$\therefore$ using *FLT* system of units we have

$$[P] = K_1[\rho^{a_1} N^{b_1} D^{c_1} H_D^{d_1} Q^{e_1}] + \ldots$$

$$\therefore \quad \left[\frac{FL}{T}\right] = \left(\frac{M}{L^3}\right)^a \left(\frac{1}{T}\right)^b (L)^c (L)^d \left(\frac{L^3}{T}\right)^e$$

$$\left[\frac{FL}{T}\right] = \left[\frac{FT^2}{L^4}\right]^a \left[\frac{1}{T}\right]^b (L)^c (L)^d \left(\frac{L^3}{T}\right)^e$$

Enforce **dimensional homogeneity**

$$\begin{cases} F & 1 = a \\ L & 1 = -4a + c + d + 3e \\ T & -1 = 2a - b - e \end{cases}$$

$$\therefore \quad a = 1$$
$$b = 3 - e$$
$$c = 5 - d - 3e$$

$$\therefore \quad [P] = K_1[(\rho^1)(N)^{3-e}(D^{5-d-3e})(H_D)^d(Q)^e] + \ldots$$

$$\left[\frac{P}{\rho D^5 N^3}\right] = f\left[\left(\frac{H_D}{D}\right), \left(\frac{Q}{ND^3}\right)\right]$$

We require that

$$\left[\frac{P}{\rho D^5 N^3}\right]_M = \left[\frac{P}{\rho D^5 N^3}\right]_P$$

http://ingesolucionarios.blogspot.com

**(cont.)**

$$\frac{5}{(\rho)(.800^5)(900)^3} = \frac{50}{(\rho)(D_P)^5(400)^3}$$

The **scalar factor** is then $\left(\frac{2.06}{.8}\right) = 2.58$

The head for the full scale pump is found next.

$$D_P = \left[\frac{(50)(.80)^5(900)^3}{(5)(400)^3}\right]^{1/5} = 2.06\ m$$

$$\left[\frac{H_D}{D}\right]_M = \left[\frac{H_D}{D}\right]_P$$

$$\left(\frac{2}{.8}\right) = \left(\frac{(H_D)_P}{2.06}\right)$$

$$\boxed{(H_D)_P = 5.15\ m}$$

Finally, we consider the volumetric flow:

$$\left[\frac{Q}{ND^3}\right]_M = \left[\frac{Q}{ND^3}\right]_P$$

$$\frac{5}{(900)(.8)^3} = \frac{Q_P}{(400)(2.06)^3}$$

$$\boxed{Q_P = 37.94\ L/sec}$$

# CHAPTER 8

http://ingesolucionarios.blogspot.com

8.3

The Reynolds number for fluid in a pipe of 10-in diameter is 1800. What will be the Reynolds number in a 6-in pipe forming an extension of the 10-in pipe? Take the flow as incompressible.

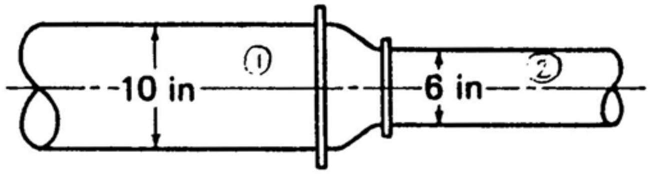


$$(Re)_1 = \frac{\rho_1 V_1 D_1}{\mu_1} = 1{,}800$$

$$\therefore \quad \frac{\rho_1 V_1}{\mu_1} = \frac{1{,}800}{\frac{10}{12}} = 2{,}160$$

But $V_1 = \frac{36}{100} V_2$

$$\frac{\rho_2 V_2}{\mu_2} = \left(\frac{100}{36}\right)(2{,}160) = 6{,}000$$

$$\therefore \quad \frac{\rho_2 V_2 D_2}{\mu_2} = (6{,}000)\left(\frac{1}{2}\right) = 3{,}000$$

$$(Re)_2 = \boxed{3{,}000}$$



http://ingesolucionarios.blogspot.com Edu_Zegarr_ch

http://ingesolucionarios.blogspot.com

8.1

What is the Reynolds number of a flow of oil in a 6-in pipe of 20 ft³/s, where $\mu = 200 \times 10^{-5}$ lb · s/ft² for the oil? Is the flow laminar or turbulent? Specific gravity = 0.8.

$$Re = \frac{\rho V D}{\mu}$$

$$\mu = 200\times10^{-5} \quad lb\text{-}sec/ft^2$$

$$V = \frac{20}{\frac{\pi}{4}\left(\frac{1}{2}\right)^2} = 101.9 \quad ft/sec$$

$$\rho = (1.938)(.8) = 1.550 \quad slugs/ft^3$$

$$D = \frac{1}{2} \quad ft$$

$$\therefore \quad Re = \frac{(1.550)(101.9)\left(\frac{1}{2}\right)}{200\times10^{-5}} = \boxed{39{,}500}$$

8.2

Gasoline at a temperature of 20°C flows through a flexible pipe from the gas pump to the gas tank of a car. If 3 L/s are flowing and the pipe has an inside diameter of 60 mm, what is the Reynolds number?

$$V = \frac{\frac{3}{1{,}000}}{\frac{(\pi)(.06)^2}{4}} = 1.061 \quad m/sec$$

From appendix for $T = 20°C$

$$\nu = 4.5\times10^{-7} \quad m^2/sec$$

$$Re = \frac{VD}{\nu} = \frac{(1.061)(.06)}{4.5\times10^{-7}} = \boxed{1.41\times10^5}$$



http://ingesolucionarios.blogspot.com Edu_Zegarr_ch

http://ingesolucionarios.blogspot.com

8.3

**The Reynolds number for fluid in a pipe of 10-in diameter is 1800. What will be the Reynolds number in a 6-in pipe forming an extension of the 10-in pipe? Take the flow as incompressible.**

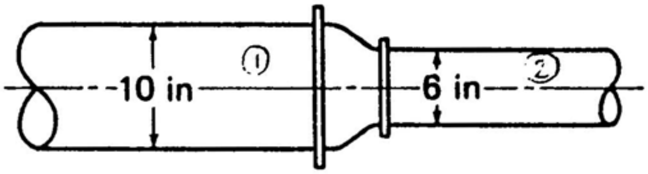


$$(Re)_1 = \frac{\rho_1 V_1 D_1}{\mu_1} = 1{,}800$$

$$\therefore \quad \frac{\rho_1 V_1}{\mu_1} = \frac{1{,}800}{\frac{10}{12}} = 2{,}160$$

But $V_1 = \frac{36}{100} V_2$

$$\frac{\rho_2 V_2}{\mu_2} = \left(\frac{100}{36}\right)(2{,}160) = 6{,}000$$

$$\therefore \quad \frac{\rho_2 V_2 D_2}{\mu_2} = (6{,}000)\left(\frac{1}{2}\right) = 3{,}000$$

$$(Re)_2 = \boxed{3{,}000}$$



http://ingesolucionarios.blogspot.com Edu_Zegarr_ch

Water is flowing through capillary tubes *A* and *B* into tube *C*. If $q_A = 2 \times 10^{-3}$ L/s in tube *A*, what is the largest $q_B$ allowable in tube *B* for laminar flow in tube *C*? The water is at a temperature of 40°C. With the calculated $q_B$, what kind of flow exists in tubes *A* and *B*?

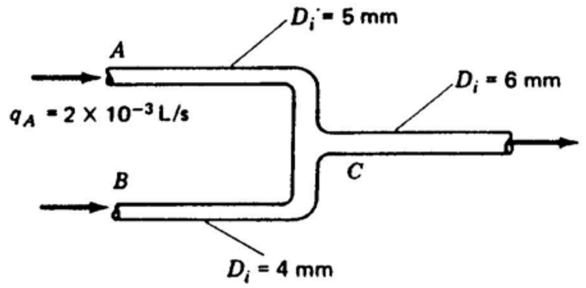


For tube $C$ assume $Re = 2{,}300$ .

$$\therefore \quad \frac{V_C D_C}{\nu} = 2{,}300$$

$$V_C = \frac{(2{,}300)(.661\times10^{-6})}{.006} = .253 \ m/\text{sec}$$

$$\therefore \quad (q_C)_{\max} = (.253)\left[\frac{\pi(.006^2)}{4}\right] = 7.16\times10^{-6} \ m^3/\text{sec} = 7.16\times10^{-3} \ L/\text{sec}$$

From **continuity**

$$q_A + q_B = 7.16\times10^{-3}$$

$$q_B = 7.16\times10^{-3} - 2\times10^{-3} = 5.16\times10^{-3} \quad L/\text{sec}$$

$$(q_B)_{\max} = 5.16\times10^{-3} \quad L/\text{sec}$$

**For Tube A**

$$\frac{V_A D_A}{\nu_A} = \frac{\left[\dfrac{(2\times10^{-3})\left(\dfrac{1}{1{,}000}\right)}{\dfrac{\pi}{4}(.005)^2}\right](.005)}{.661\times10^{-6}}$$

$$(Re)_A = 770 \qquad \therefore \ \textit{Laminar flow in A}$$

**For Tube B**

http://ingesolucionarios.blogspot.com
(cont.)

$$\frac{V_B D_B}{\nu_B} = \frac{\left[\dfrac{\left(\dfrac{5.16\times10^{-3}}{1{,}000}\right)}{\dfrac{\pi}{4}(.004)^2}\right](.004)}{.661\times10^{-6}}$$

$$(Re)_B = 2{,}485 \qquad \therefore \textit{ Turbulent flow in B}$$

8.5 For Tube C assume $Re = 2{,}300$

Do Prob. 8.4 for the case where the fluid is kerosene.

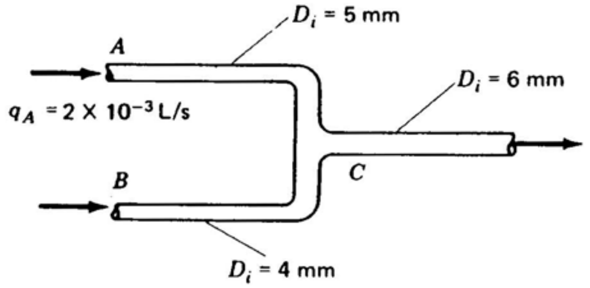


$$\therefore \quad \frac{V_C D_C}{\nu_C} = 2{,}300$$

$$V_C = \frac{(2{,}300)(1.9\times10^{-5})(.0929)}{.006} = .6766 \ m/s$$

$$(q_c)_{max} = (.6766)\left(\frac{\pi}{4}\right)(.006)^2 = 1.913\times10^{-5} \ m^3/s$$

From continuity

$$q_A + q_B = 1.913\times10^{-5}$$

$$q_B = 1.913\times10^{-5} - 2\times10^{-6} = 1.713\times10^{-5} \ m^3/s$$

For Tube A

$$(Re)_A = \frac{V_A D_A}{\nu} = \frac{\left[\dfrac{2\times10^{-6}}{\dfrac{\pi(.005)^2}{4}}\right](.005)}{(1.9\times10^{-5})(.0929)} = 288.5$$

∴ Laminar Flow in A

For Tube B

$$(Re)_B = \frac{V_B D_B}{\nu} = \frac{\left[\dfrac{1.713\times10^{-5}}{\dfrac{\pi(.004)^2}{4}}\right](.004)}{(1.9\times10^{-5})(.0929)} = 3{,}089$$

∴ Turbulent Flow in B

http://ingesolucionarios.blogspot.com

A fluid is at 50°F and is flowing through a 3-in tube at the rate of 1 ft³/s. Determine if the flow is laminar or turbulent for the following fluids:
(*a*) saturated steam
(*b*) hydrogen
(*c*) air
(*d*) mercury

8.6

$$V = \frac{.1}{\frac{(\pi)\left(\frac{3}{12}\right)^2}{4}} = 2.037 \quad ft/\text{sec}$$

a) $$Re = \frac{(2.037)\left(\frac{1}{4}\right)}{(10^{-2})} = 50.9$$ Laminar

b) $$Re = \frac{(2.037)\left(\frac{1}{4}\right)}{1.3\times10^{-3}} = 391.7$$ Laminar

c) $$Re = \frac{(2.037)\left(\frac{1}{4}\right)}{1.8\times10^{-4}} = 2{,}829$$ Turbulent

d) $$Re = \frac{(2.037)\left(\frac{1}{4}\right)}{1.4\times10^{-6}} = 3.638\times10^{5}$$ Turbulent



http://ingesolucionarios.blogspot.com Edu_Zegarr_ch

 http://ingesolucionarios.blogspot.com

An incompressible steady flow of water is present in a tube of constant cross section. What is the head loss between positions *A* and *B* along the tube?

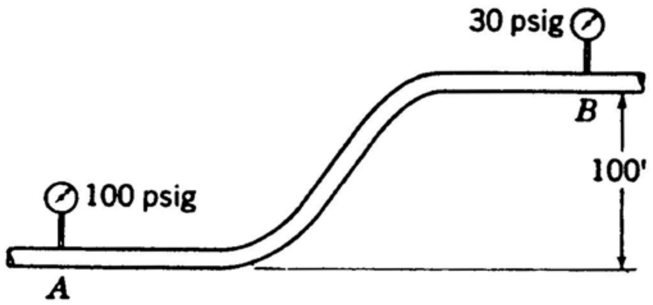


We write **modified Bernoulli** between A and B.

$$\left(\frac{p_A}{\rho} + \frac{V_A^2}{2} + gy_A\right) - \left(\frac{p_B}{\rho} + \frac{V_B^2}{2} + gy_B\right) = h_l$$

From **continuity** $V_A = V_B$ . Solving for $h_l$ we have:

$$h_l = \frac{p_A - p_B}{\rho} + g(y_A - y_B) = \frac{(100-30)(144)}{1.938} + (32.2)(-100)$$

$$h_l = 5{,}201 - 3{,}220 = 1{,}981$$

$$\therefore \quad h_l = 1{,}981 \ \frac{ft.lb.}{slug} = \boxed{1{,}981 \ ft^2/sec^2}$$

http://ingesolucionarios.blogspot.com

## 8.8

In Prob. 8.7 the cross-sectional area of the tube is $\frac{1}{2}$ in and the average velocity is 5 ft/s. If there is an increase of internal energy of the water from *A* to *B* of 1 Btu/slug, what is the total heat transfer through the tube between these two points in 1 min? The head loss between *A* and *B* was computed to be 1976 $ft^2/s^2$. Do not use the first law of thermodynamics directly.

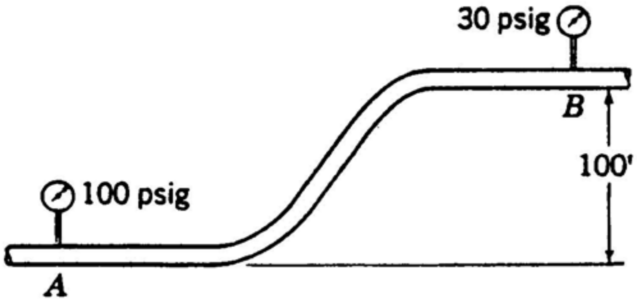


$$h_l = (u_2 - u_1) - \frac{dQ}{dm}$$

$$1{,}976 = (1)(778) - \frac{dQ}{dm}$$

$$\frac{dQ}{dm} = -\,1{,}198 \quad \frac{ft.lb.}{slug}$$

$$\Delta Q = \left(\frac{dQ}{dm}\right)\left(\frac{dm}{dt}\right)(60)$$

$$= -(1{,}198)\left[\frac{(1.938)(5)\left(\frac{1}{2}\right)}{144}\right](60)$$

$$= -2418 \; ft.\text{-}lb. =$$ **3.11 *BTU leaving the pipe***



http://ingesolucionarios.blogspot.com Edu_Zegarr_ch

http://ingesolucionarios.blogspot.com

8.9

Water is flowing through a pipe at the rate of 5 L/s. If the following gage pressures are measured,

$p_1 = 12$ kPa $\quad p_2 = 11.5$ kPa $\quad p_3 = 10.3$ kPa

what are the head losses between ① and ② and between ① and ③?

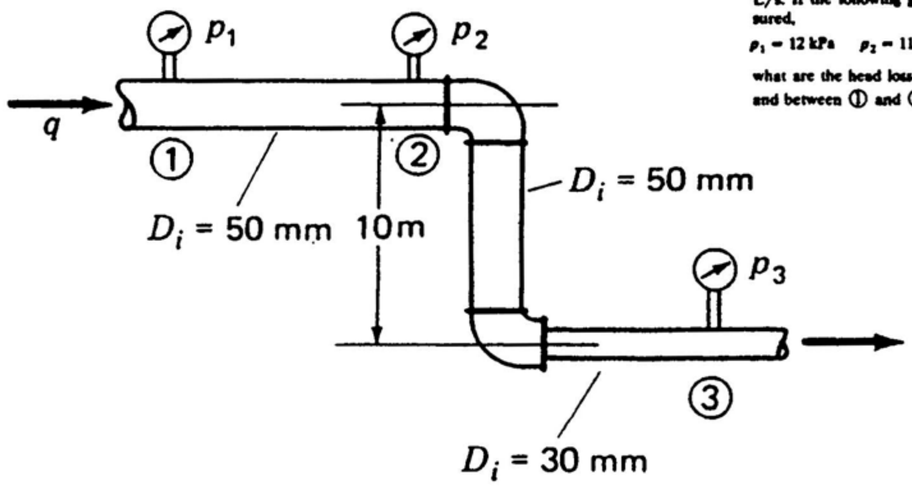


Go to the **modified Bernoulli** equation.

a) $$\frac{p_1}{\rho} + \frac{V_1^2}{2} + gz_1 = \frac{p_2}{\rho} + \frac{V_2^2}{2} + gz_2 + (h_l)_{1-2}$$

$$h_l = \frac{p_1 - p_2}{\rho} = \frac{(12-11.5)(1{,}000)}{1{,}000}$$

$$(h_l)_{1-2} = .5 \ J/kg$$

b) $$\frac{p_1}{\rho} + \frac{V_1^2}{2} + gz_1 = \frac{p_3}{\rho} + \frac{V_3^2}{2} + gz_3 + (h_l)_{1-3}$$

Use bottom pipe as datum.

$$(h_l)_{1-3} = \frac{p_1 - p_3}{\rho} + \left(\frac{V_1^2}{2} - \frac{V_3^2}{2}\right) + (10)(g) - 0$$

$$(h_l)_{1-3} = \frac{(1.7)(1{,}000)}{1{,}000} = \left(\frac{1}{2}\right)\left[\frac{\frac{5}{1{,}000}}{\left(\frac{\pi}{4}\right)(.05)^2}\right]^2 - \left(\frac{1}{2}\right)\left[\frac{\frac{5}{1{,}000}}{\left(\frac{\pi}{4}\right)(.03)^2}\right]^2 + 98.1$$

$$= 1.7 + 3.24 - 25 + 98.1$$

$$(h_l)_{1-3} = \boxed{78 \ \frac{N-m}{kg}}$$



http://ingesolucionarios.blogspot.com Edu_Zegarr_ch

http://ingesolucionarios.blogspot.com

8.10

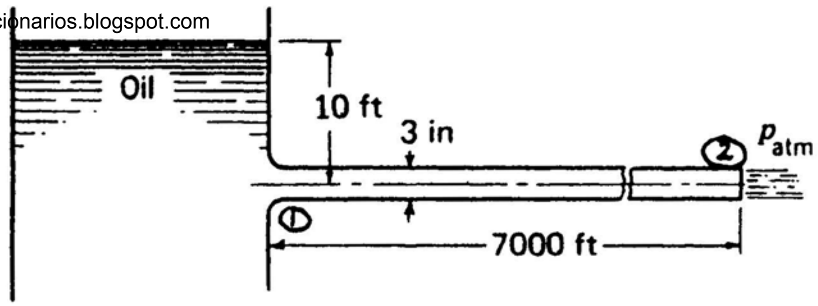


A large oil reservoir has a pipe of 3-in diameter and 7000-ft length connected to it. The free surface of the reservoir is 10 ft above the centerline of the pipe and can be assumed to remain at this fixed elevation. Assuming laminar flow through the pipe, compute the amount of flow issuing out of the pipe as a free jet. Compute $V$, and then check to see whether or not the Reynolds number is less than critical. Kinematic viscosity of the oil is $1 \times 10^{-4}$ ft²/s. Neglect entrance losses to the pipe.

Apply the **modified Bernoulli** equation between pts. (1) and (2).

$$\frac{V_1^2}{2} + \frac{p_1}{\rho} + gz_1 = \frac{V_2^2}{2} + \frac{p_2}{\rho} + gz_2 + h_l$$

But $V_1 = V_2$ from **continuity**. Using gauge pressures and the indicated datum for potential energy of gravity we get:

$$\frac{p_1}{\rho} = h_l \qquad \text{(a)}$$

We can express $h_l$ as follows:

$$h_l = \frac{128qL\nu}{\pi D^4} = \frac{(128)(V_1)\left(\frac{\pi D^2}{4}\right)(L)(\nu)}{\pi D^4} = \frac{32V_1L\nu}{D^2} = 358.4V_1$$

Also use **Bernoulli** between "a" and point (1) $\qquad \left[(10)g - \frac{V_1^2}{2}\right] = \frac{p_1}{\rho}$

Going back to Eq. (a) we get: $\qquad 322 - \frac{V_1^2}{2} = 358.4V_1$

This becomes $\qquad V_1^2 + 716.8V_1 - 644 = 0$

Hence

$$V_1 = \frac{-716.8 \pm \sqrt{(716.8)^2 + (4)(644)}}{2} = \frac{-716.8 + 718.6}{2} = \boxed{.8973\ ft/\text{sec}}$$

$$Re = \frac{V_1 D}{\nu} = \frac{(.8973)\left(\frac{1}{4}\right)}{1 \times 10^{-4}} = \boxed{2{,}243}$$

∴ flow is laminar.

http://ingesolucionarios.blogspot.com

8.11 In Prob. 8.10, if the fluid is kerosene, do you have laminar or turbulent flow? The temperature is 50°F.

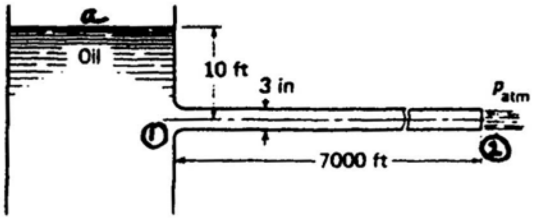


**Modified Bernoulli** between (1) and (2).

$$\frac{V_1^2}{2} + \frac{p_1}{\rho} + gz_1 = \frac{V_2^2}{2} + \frac{p_2}{\rho} + gz_2 + h_l$$

But $V_1 = V_2$ from **continuity**. ∴ Using gauge pressures and indicated datum, we get

$$\frac{p_1}{\rho} = h_l$$

Assume **laminar** flow

$$\therefore \quad \frac{p_1}{\rho} = \frac{128qL\nu}{\pi D^4} = \frac{(128)(V)\left(\frac{\pi}{4}D^2\right)(7{,}000)(3.4\times10^{-5})}{(\pi)(D^4)}$$

$$\frac{p_1}{\rho} = 121.9V$$

Use **Bernoulli** between (a) and (1).

$$\frac{V_a^2}{2} + \frac{p_a}{\rho} + 10g = \frac{V^2}{2} + \frac{p_1}{\rho} + 0$$

$$322 = \frac{V^2}{2} + 121.9V$$

$$V^2 + 243.8V - 644 = 0$$

$$V = \frac{-243.8 \pm \sqrt{(243.8)^2 + (4)(644)}}{2} = 2.61 \quad ft/\text{sec}$$

Consider *Re*

$$R_e = \frac{(2.61)\left(\frac{1}{4}\right)}{3.4\times10^{-5}} = 19{,}191$$

Assumption wrong! Flow is **turbulent**.

8.12

In a 10-in pipe at what radius is the velocity equal to 80% of the mean velocity for Poiseuille flow?

$$V_{mean} = \frac{q}{\left(\frac{\pi D^2}{4}\right)}$$

Using Eq. (7.69),

$$\therefore \quad (.8V_{mean}) = (.8)\left[\frac{q}{\left(\frac{\pi D^2}{4}\right)}\right] = \frac{p_1 - p_2}{4\mu L}\left(\frac{D^2}{4} - r^2\right) \qquad (1)$$

Now compute $q$ .

$$q = \iint V\,dA = \int_0^{D/2} \frac{p_1-p_2}{4\mu L}\left(\frac{D^2}{4} - r^2\right)(2\pi r)dr$$

$$= \frac{p_1-p_2}{4\mu L}(2\pi)\left(\frac{D^2}{4}\frac{r^2}{2} - \frac{r^4}{4}\right)\Bigg|_0^{\frac{D}{2}} = \frac{\pi(p_1-p_2)D^4}{128\mu L}$$

Subst. $q$ into Eq. (1).

$$.8\left[\frac{\frac{\pi(p_1-p_2)D^4}{128\mu L}}{\frac{\pi D^2}{4}}\right] = \frac{p_1-p_2}{4\mu L}\left(\frac{D^2}{4} - r^2\right)$$

$$\frac{3.2D^2}{128} = \frac{1}{4}\left(\frac{D^2}{4} - r^2\right)$$

$$-.15D^2 = -r^2$$

$$\frac{r}{D} = .3873$$

$$\therefore \quad \boxed{r = 3.873 \quad m}$$

http://ingesolucionarios.blogspot.com

8.13

If 140 L/s of water flows through the pipe system, what total head loss is being developed over the length of the pipe?

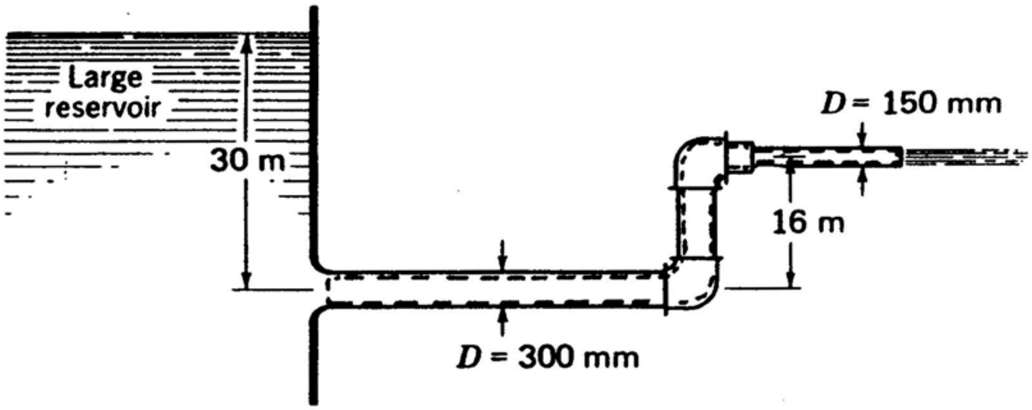


Write for **first law of thermodynamics** for the indicated control volume.

$$\left(\frac{V_1^2}{2} + \frac{p_1}{\rho}\right) - \left(\frac{V_2^2}{2} + \frac{p_2}{\rho} + gy_2\right) = h_l$$

$$V_1 = \frac{\frac{140}{1{,}000}}{\frac{(\pi)(.3)^2}{4}} = 1.981\ m/\text{sec} \qquad V_2 = \frac{\frac{140}{1{,}000}}{\frac{(\pi)^2(.150)}{4}} = 7.92\ m/\text{sec}$$

Using gauge pressures, the first law becomes

$$h_l = \left[\frac{1.981^2 - 7.92^2}{2}\right] + \left(\frac{p_1}{1{,}000}\right) - (9.81)(16) = -186.4 + \frac{p_1}{1{,}000} \qquad \text{(a)}$$

Now use **Bernoulli** between (3) and (1). Neglecting $V_3^2/2$ we have:

$$30g = \frac{V_1^2}{2} + \frac{p_1}{1{,}000}$$

$$\therefore \quad \frac{p_1}{1{,}000} = 294.3 - \frac{1.981^2}{2} = 292.3 \qquad \text{(b)}$$

Subst. into Eq. (a)

$$h_l = -186.4 + 292.3 = \boxed{105.9\ J/kg}$$

8.14

Water at 40°C flows from tank *A* to tank *B* (Fig P9.14). What is the volumetric flow at the configuration shown? Neglect entrance losses to the capillary tube as well as exit losses.

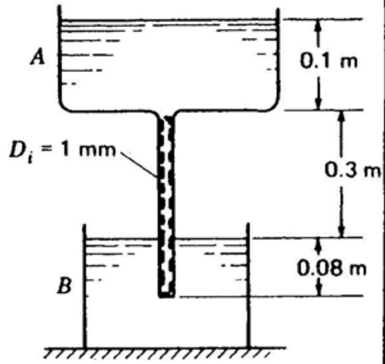


Assume **laminar** flow in tube. Then the head loss $h_l$ becomes:

$$h_l = \frac{(128)(q)(.38)(.656\times10^{-3})}{(\pi)(.001)^4(992)} = 1.024\times10^7 q \quad \frac{N-m}{kg} \qquad (a)$$

**First Law** for tube

$$\frac{V_1^2}{2} + gz_1 + \frac{p_1}{\rho} = \frac{V_2^2}{2} + gz_2 + \frac{p_2}{\rho} + h_l \qquad (b)$$

**Bernoulli** between free surface in tank A and top of tube. Use gauge pressures.

$$.1g = \frac{V_1^2}{2} + \frac{p_1}{\rho}$$

$$\therefore \quad \frac{p_1}{\rho} = .981 - \frac{V_1^2}{2} \qquad (c)$$

**Hydrostatics** for tank B. $\quad p_2 = (\gamma)(.08) = (9{,}733)(.08) = 778.6$

$$\frac{p_2}{\rho} = .785 \qquad (d)$$

Subst. (a), (c), and (d) into Eq. (b).

$$(.38)(9.81) + \left(.981 - \frac{V_1^2}{2}\right) = .785 + (1.024\times10^7)(V_1)\frac{(\pi)(.001)}{4}$$

$$V_1^2 + 16.08V_1 - 7.85 = 0$$

$$V_1 = \frac{-16.08 \pm \sqrt{16.08^2+(4)(7.85)}}{2} = .474 \quad m/\text{sec}$$

$$\therefore \quad Re = \frac{(.474)(.001)}{\dfrac{.656\times10^{-3}}{992.2}} = 717$$

Assumption of laminar flow ok.

$$q = (.474)\frac{(\pi)(.001)^2}{4} = 3.72\times10^{-7} \quad m^3/\text{sec} = \boxed{3.72\times10^{-4} \quad L/\text{sec}}$$

8.15

In Prob. 8.14, what should the internal diameter of the tube be to permit a flow of $6 \times 10^{-4}$ L/s?

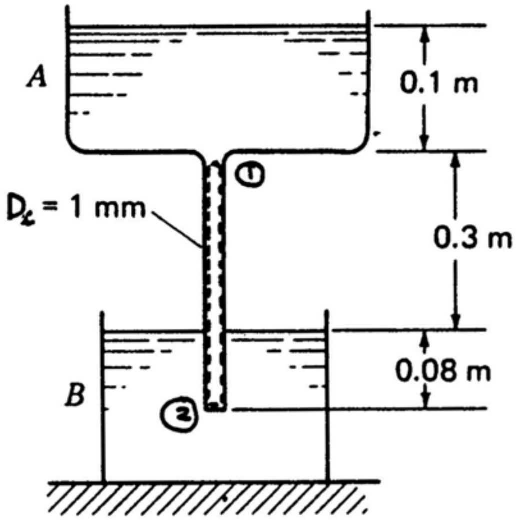


**First Law** for tube.

$$\frac{V_1^2}{2} + gz_1 + \frac{p_1}{\rho} = \frac{V_2^2}{2} + gz_2 + \frac{p_2}{\rho} + h_l \qquad \text{(a)}$$

Use **Bernoulli** for $p_2/\rho$ . Use gauge pressures.

$$gz_a = \frac{p_1}{\rho} + \frac{V^2}{2}$$

$$\frac{p_1}{\rho} = (.1)(9.81) - \frac{V^2}{2} \qquad \text{(b)}$$

Use **hydrostatics** for $p_2$ .

$$p_2 = \gamma(.08) = (9{,}733)(.08) = 778.6 \qquad \text{(c)}$$

Assume **laminar** flow. Hence:

$$h_l = \frac{(128)\left[\frac{6\times10^{-4}}{1{,}000}\right](.38)(.656\times10^{-3})}{(\pi)(D^4)(992)} = \frac{6.143\times10^{-12}}{D^4} \qquad \text{(d)}$$

Substitute (b), (c) and (d) into (a).

8.14

http://ingesolucionarios.blogspot.com
(cont.)

$$gz_1 + .981 - \frac{V^2}{2} = \left(\frac{778.6}{992}\right) + \frac{6.143\times10^{-12}}{D^4} \quad \text{(e)}$$

**NOTE** $$V = \frac{q}{A} = \frac{6\times10^{-7}}{\left(\frac{\pi D^2}{4}\right)} = \frac{7.64\times10^{-7}}{D^2}$$

We then have for (e)

$$(9.81)(.38) + .981 - \left[\frac{2.918\times10^{-13}}{D^4}\right] = .785 + \left[\frac{6.143\times10^{-12}}{D^4}\right]$$

Solve for $D$ . $D = .0011316\ m = 1.13116\ mm$

Check Reynolds number.

$$Re = \frac{(992)\left[\frac{7.64\times10^{-7}}{.0011316^2}\right](.0011316)}{(.656\times10^{-3})} = 1{,}020$$

∴ laminar flow assumption justified.



http://ingesolucionarios.blogspot.com Edu_Zegarr_ch

http://ingesolucionarios.blogspot.com



A hypodermic needle has an inside diameter of 0.3 mm and is 60 mm in length.

If the piston moves to the right at a speed of 18 mm/s and there is no leakage, what force $F$ is needed on the piston. The medicine in the hypodermic has a viscosity $\mu$ of $0.980 \times 10^{-3}$ N · s/m$^2$ and the density $\rho$ is J0 kg/m$^3$. Consider flows in both needle and cylinder. Neglect exit losses from the needle as well as losses at the juncture of the needle and cylinder.

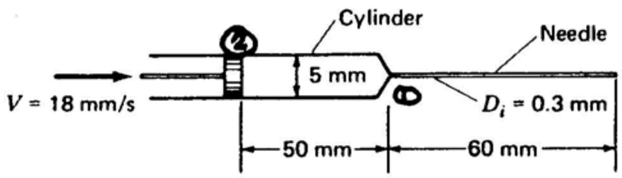


**For needle**

$$q = V_p A = (.018)(\pi)\left(\frac{.005^2}{4}\right) = 3.534 \times 10^{-7} \quad m^3/\text{sec}$$

Hence

$$Re = \frac{(800)\,\dfrac{3.534\times10^{-7}}{\left(\dfrac{\pi}{4}\right)(.0003)^2}\,(.0003)}{.980\times10^{-3}} = 1{,}224$$

Flow is laminar.

$$\therefore \quad p_1 = \frac{(128)(3.534\times10^{-7})(.980\times10^{-3})(.060)}{(\pi)(.0003)^4} = 104.5 \quad kPa \quad gauge$$

For <u>cylinder</u>

$$q = 3.534 \times 10^{-7}$$

$$Re = \frac{(800)(.018)(.005)}{.980\times10^{-3}} = 73.5$$

Flow is laminar also.

$$p_2 = \frac{(128)(3.534\times10^{-7})(.980\times10^{-3})(.050)}{(\pi)(.005)^4} = 1.129 \quad Pa \quad gauge$$

$$\therefore \quad (\Delta p)_{TOTAL} = 104{,}525 \quad Pa$$

$$F = (\Delta p)(A)_{cyl} = (104{,}525)(\pi)\left(\frac{.005^2}{4}\right) = \boxed{2.06 \; N}$$

http://ingesolucionarios.blogspot.com

8.16

A hypodermic needle has an inside diameter of 0.3 mm and is 60 mm in length.

If the piston moves to the right at a speed of 18 mm/s and there is no leakage, what force $F$ is needed on the piston. The medicine in the hypodermic has a viscosity $\mu$ of $0.980 \times 10^{-3}$ N · s/m² and the density $\rho$ is J0 kg/m³. Consider flows in both needle and cylinder. Neglect exit losses from the needle as well as losses at the juncture of the needle and cylinder.

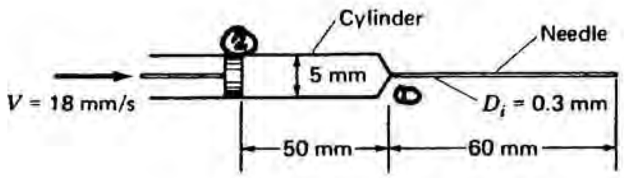


**For needle**

$$q = V_p A = (.018)(\pi)\left(\frac{.005^2}{4}\right) = 3.534 \times 10^{-7} \quad m^3/\text{sec}$$

Hence

$$Re = \frac{(800)\,\dfrac{3.534\times10^{-7}}{\left(\dfrac{\pi}{4}\right)(.0003)^2}\,(.0003)}{.980\times10^{-3}} = 1{,}224$$

Flow is laminar.

$$\therefore \quad p_1 = \frac{(128)(3.534\times10^{-7})(.980\times10^{-3})(.060)}{(\pi)(.0003)^4} = 104.5 \quad kPa \quad gauge$$

For <u>cylinder</u>

$$q = 3.534 \times 10^{-7}$$

$$Re = \frac{(800)(.018)(.005)}{.980\times10^{-3}} = 73.5$$

Flow is laminar also.

$$p_2 = \frac{(128)(3.534\times10^{-7})(.980\times10^{-3})(.050)}{(\pi)(.005)^4} = 1.129 \quad Pa \quad gauge$$

$$\therefore \quad (\Delta p)_{TOTAL} = 104{,}525 \quad Pa$$

$$F = (\Delta p)(A)_{cyl} = (104{,}525)(\pi)\left(\frac{.005^2}{4}\right) = \boxed{2.06 \ N}$$

 http://ingesolucionarios.blogspot.com

In Prob. 8.16 suppose that you are drawing the medicine from a container at atmospheric pressure. What is the largest flow, $q$, of fluid if the fluid has a vapor pressure of 4700 Pa absolute? Neglect losses in the cylinder. What is the speed of the piston for the maximum flow of medicine if there is a 10 percent leakage around the piston for the pressure of 4700 Pa absolute in the cylinder?

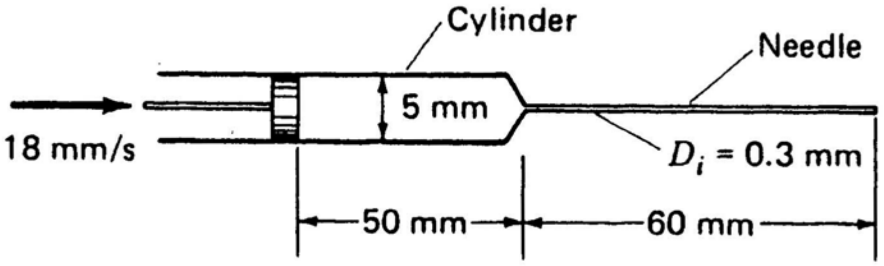


$$p_v = 4{,}700 \quad Pa$$

Find $V_{max}$ of piston. No losses in volumetric flow.

$$\frac{\Delta p}{\rho} = \frac{101{,}325-4{,}700}{\rho} = \frac{(128)(.980\times10^{-3})(.060)(q_{max})}{(\pi)(.0003)^4\rho}$$

$$q_{max} = 3.27 \times 10^{-7} \quad m^3/sec$$

$$\therefore \quad V_{max}A = \frac{q_{max}}{.90}$$

$$V_{max} = \frac{(3.27\times10^{-7})}{\left[\frac{(\pi)(.005^2)}{4}\right](.90)}$$

$$V_{max} = 1.849 \times 10^{-2}\ \frac{m}{sec} = \boxed{18.49 \quad mm/sec}$$



http://ingesolucionarios.blogspot.com Edu_Zegarr_ch

In Prob. 8.16 it took a force of 2.05 N to move the piston to the right at a speed of 18 mm/s. What should the inside diameter be for the needle if the force needed is only 1 N for the same piston speed? Neglect losses in cylinder.

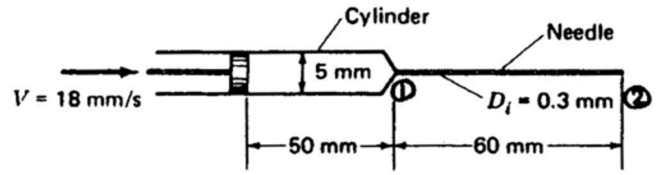


$$q = VA = (.018)(\pi)\left(\frac{.005^2}{4}\right) = 3.534\times10^{-7} \quad m^3/sec$$

**First law** for needle interior. Use gauge pressures.

$$\frac{V_1^2}{2} + gz_1 + \frac{p_1}{\rho} = \frac{V_2^2}{2} + gz_c + \frac{p_2}{\rho} + h_\ell \qquad \text{(a)}$$

For **laminar** flow:

$$\frac{p_1}{\rho} = h_\ell = \frac{(128)(3.52\times10^{-7})(.980\times10^{-3})(.060)}{(\pi)(D^4)(800)} = \frac{1.058\times10^{-12}}{D^4} \qquad \text{(b)}$$

Substitute into Eq. (a). $\frac{p_1}{\rho} = \frac{1.058\times10^{-12}}{D^4}$

But $p_1 = \frac{F}{A} = \frac{1}{\frac{(\pi)(.005)^2}{4}} = 50{,}930 \quad Pa$

Subst. into (c). $\frac{50{,}930}{800} = \frac{1.058\times10^{-12}}{D^4}$

$$D = .359 \quad mm$$

Check Reynolds Number.

$$Re = \frac{(800)(3.49)(.359\times10^{-3})}{.980\times10^{-3}} = 1023$$

Laminar flow assumption ok.

http://ingesolucionarios.blogspot.com

What drag is developed by oil having a viscosity of $50 \times 10^{-5}$ lb · s/ft² as it moves through a pipe of diameter 3 in and length 100 ft at an average speed of 0.2 ft/s? The specific weight of the oil is 50 lb/ft³.

$$\begin{cases} \mu = 50\times10^{-5} \quad lb\text{-}sec/ft^2 \\ D = 3 \quad in. \\ L = 100 \quad ft \end{cases} \qquad \begin{cases} V = .2 \quad ft/sec \\ \gamma = 50 \quad lb/ft^3 \end{cases}$$

First determine $\rho$ for oil.

$$\rho_{oil} = \frac{\gamma_{oil}}{\gamma_{H_2O}}(\rho_{H_2O}) = \frac{50}{62.4}(1.938) = 1.553 \quad slugs/ft^3$$

We first find $Re$ .

$$Re = \frac{(1.553)(.2)\left(\frac{1}{4}\right)}{(50\times10^{-5})} = 155.3$$

We have laminar flow. The velocity profile then is from Eq. (9.9)

$$V = \left(\frac{p_2 - p_1}{4\mu L}\right)\left(r^2 - \frac{D^2}{4}\right)$$

Using **Newton's viscosity** law we have for $\tau$ :

$$\tau = \mu\,\frac{\partial V}{\partial r} = \frac{(p_1 - p_2)}{4L}(2r) = \frac{(p_1 - p_2)r}{2L}$$

At the wall we get:

$$\tau = \left(\frac{p_2 - p_1}{2L}\right)\left(\frac{D}{2}\right) = \left(\frac{p_2 - p_1}{L}\right)\left(\frac{D}{4}\right)$$

But

$$\frac{p_2 - p_1}{L} = -\,\frac{128q\mu}{\pi D^4} = -\,\frac{32V\mu}{D^2}$$

Hence

$$\tau = -\left(\frac{32V\mu}{D^2}\right)\left(\frac{D}{4}\right) = -\,\frac{8V\mu}{D}$$

Putting in the given data:

$$\tau = -\,\frac{(8)(.2)(50\times10^{-5})}{\left(\frac{1}{4}\right)} = -.00320 \quad lb/ft^2$$

We can get the drag now.

$$Drag = (\tau)(\pi D)(L) = (.00320)(3.14)\left(\frac{1}{4}\right)(100) = \boxed{.251 \; lb}$$


http://ingesolucionarios.blogspot.com Edu_Zegarr_ch

Kerosene is flowing from a tank and out through two capillary tubes as shown.

Determine the heights $h$ for the flow to just become laminar for each capillary. The temperature of the kerosene is 40°C. Neglect entrance losses to capillaries and treat problem as quasi-static.

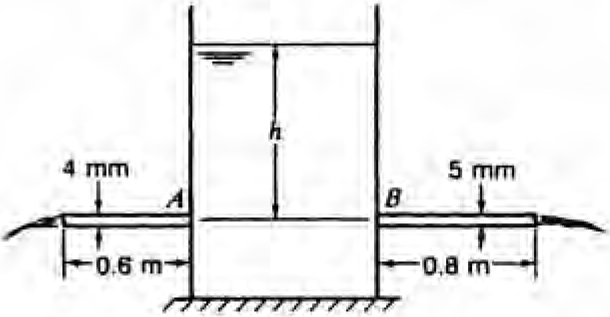


9.20 **Bernoulli in tank.** Use gauge pressures.

$$\frac{V_h^2}{2} + hg + 0 = \frac{V_B^2}{2} + 0 + \frac{p_B}{\rho} \qquad 9.81h = \frac{V_B^2}{2} + \frac{p_B}{\rho} \tag{1}$$

$$\frac{p_B}{\rho} = 9.81h - \frac{V_B^2}{2} \tag{2}$$

Also

$$\frac{p_A}{\rho} = 9.81h - \frac{V_A^2}{2} \tag{3}$$

$$\nu = (1.9\times10^{-5})(.0929) = 1.765\times10^{-6} \quad m^2/s$$

a) <u>For Tube A.</u> **Modified Bernoulli** for capillary A.

$$\frac{V_A^2}{2} + \frac{p_A}{\rho} + 0 = \frac{V_A^2}{2} + 0 + 0 + \frac{(128)(\mu)(.6)(V_A)\left(\frac{\pi}{4}\right)(.004)^2}{(\pi)(.004)^4(\rho)} \tag{4}$$

Subst. from (3),

$$9.81h - \frac{V_A^2}{2} = \frac{(128)(1.765\times10^{-6})(.6)(V_A)}{(4)(.004)^2}$$

$$\therefore \quad V_A^2 + 4.236V_A - 19.62h = 0 \tag{5}$$

http://ingesolucionarios.blogspot.com
(cont.)

For laminar flow:

$$Re = 2{,}300 = \frac{(V_A)(.004)}{1.765\times10^{-6}}$$

$$V_A = 1.015 \quad m/s$$

$$h = \frac{1}{19.62}\left[1.015^2 + (4.236)(1.015)\right]$$

$$\boxed{h = .2716\ m}$$

b) <u>For Tube B</u>

$$V_B^2 + \frac{(128)(1.765\times10^{-6})(.8)V_B}{(2)(.005)^2} - 19.62h = 0 \qquad V_B^2 + 3.615V_B - 19.62h = 0$$

$$2{,}300 = \frac{(V_B)(.005)}{1.765\times10^{-6}} \qquad V_B = .8119 \quad m/s$$

$$h = \frac{1}{19.62}\left[.8119^2 + (3.615)(.8119)\right] = \boxed{.1832 \quad m}$$

http://ingesolucionarios.blogspot.com Edu_Zegarr_ch

http://ingesolucionarios.blogspot.com

8.21

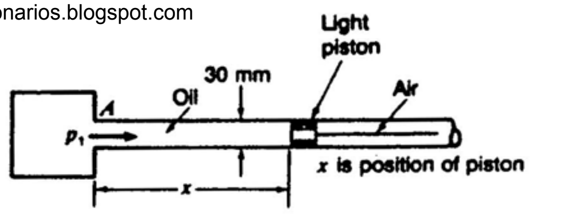


Oil data: S.G. = 0.850
$\mu$ = 0.0200 N-s / m²

$$V = Ct^2$$

Shown ... P8.21 is part of a robotic device. Heavy oil is pumped at $A$ to move a piston having a constant frictional resistance of 20 N. What pressure as a function of time is needed at $A$ to move the piston to a speed of 5 m/s in 10 s such that the velocity varies as $t^2$ with $t$ in seconds? Proceed as follows:

1. At what position $x_{lam}$ of the piston does the flow of oil cease to be laminar?
2. What is the head loss at $x$ as a function of time for laminar flow?
3. Determine $p_1$ as a function of time to cause the motion of the piston during the laminar part of flow. Remember that the oil must accelerate. Do not use a control volume here. A system approach is better.
4. What is the pressure $p_1$ at $t = 5$ s?

The piston starts at $x = 0$.

When $t = 10$ $\quad V = 5\ m/s$ $\quad \therefore\ 5 = C(100)$ $\quad C = .05$

$$\therefore \boxed{V = .05t^2}$$

a) $$2{,}300 = \frac{\rho VD}{\mu} = \frac{(.85)(1{,}000)(.050t^2)(.03)}{0.200} \qquad t = 6.01 \quad \text{sec}$$

Note: $\quad V = .05t^2 \quad \therefore\ x = .05\,\dfrac{t^3}{3} + C_1$

**For laminar flow:**

$$\boxed{x_{2,300} = 3.62 \quad m}$$

b)

$$h_\ell = \frac{128\mu Lq}{\pi D^4 \rho} = \frac{(128)(.02)\left(.05\,\dfrac{t^3}{3}\right)\left[\left(\dfrac{\pi(.03)^2}{4}\right)(.05t^2)\right]}{(\pi)(.03)^4(850)} = \boxed{.000697t^5 \quad \frac{Pa}{kg/m^3}}$$

c) **Newton's Law.** Use gauge pressures.

$$p_1\,\frac{\pi(.03)^2}{4} - (.000697t^5)(850)\left(\frac{\pi}{4}\right)(.03)^2 - 20 = \left[(850)\left(\frac{.05t^3}{3}\right)\left(\frac{\pi}{4}\right)(.03)^2\right]\frac{dV}{dt}$$

$$p_1(7.069\times10^{-4}) = 4.188\times10^{-4}t^5 + 20 + (.0100t^3)\left(\frac{dV}{dt}\right)$$

But $\quad \dfrac{dV}{dt} = (.10t) \qquad \therefore\ p_1 = .5924t^5 + 2.829\times10^4 + 1.416t^4$

$$\boxed{p_1 = .5924t^5 + 1.416t^4 + 2.829\times10^4}$$

d)

$$\boxed{(p_1) = 3.103\times10^4 \quad Pa\ gauge}$$

 http://ingesolucionarios.blogspot.com

**What is the pressure $p_1$ for a Reynolds number of 10 in the tube? Tank $A$ is large. The specific gravity of the oil is 0.65 and the kinematic viscosity of the oil is 0.00018 m²/s.**

Neglect friction in tank A because velocity gradients should be small except at entrance to the tube BC. Assume steady flow (quasi-steady condition).

**Bernoulli between (1) and (2).** Use gauge pressures and datum (1).

$$\frac{p_1}{\rho} + \frac{V_1^2}{2} + gz_1 = \frac{p_2}{\rho} + \frac{V^2}{2} + gz_2 \qquad \therefore \quad \frac{p_2}{\rho} = \frac{p_1}{650} + (.3)(9.81) - \frac{V^2}{2} \qquad (1)$$

**Modified Bernoulli for BC.** Datum (2).

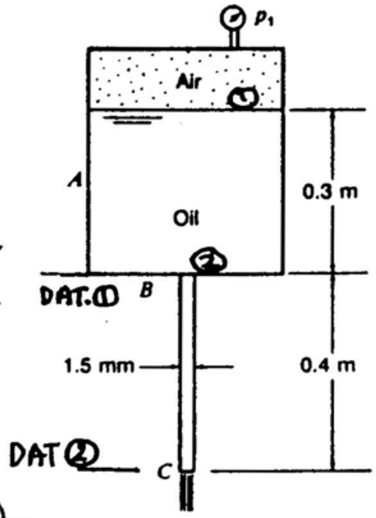


$$\frac{p_2}{\rho} + \frac{V^2}{2} + gz_2 = \frac{p_C}{\rho} + \frac{V^2}{2} + gz_C + h_l$$

$$\therefore \quad \frac{p_2}{650} + (.4)(9.81) = \frac{128\nu Lq}{\pi D^4} = \frac{128\nu L\left(\frac{\pi}{4}\right)D^2 V}{\pi D^4}$$

Subst. for $\frac{p_2}{\rho}$.

$$\left(\frac{p_1}{650} + 2.943 - \frac{V^2}{2}\right) + 3.924 = \frac{(128)(.00018)(.4)\left(\frac{1}{4}\right)V}{(.0015)^2} \qquad (2)$$

Now use the **critical Reynolds** number.

$$10 = \frac{VD}{\nu} = \frac{(V)(.0015)}{(.00018)} \qquad \therefore \quad V = 1.2 \quad m/s$$

Go back to Eq. (2). Subst. $V = 1.2\ m/s$

$$\frac{p_1}{650} + 6.867 - \frac{1.2^2}{2} = \frac{(128)(.00018)(.4)\left(\frac{1}{4}\right)(1.2)}{(.0015)^2}$$

$$\therefore \quad \boxed{p_1 = 7.947\times10^5 \quad Pa\ gauge}$$



http://ingesolucionarios.blogspot.com Edu_Zegarr_ch

http://ingesolucionarios.blogspot.com

8.23

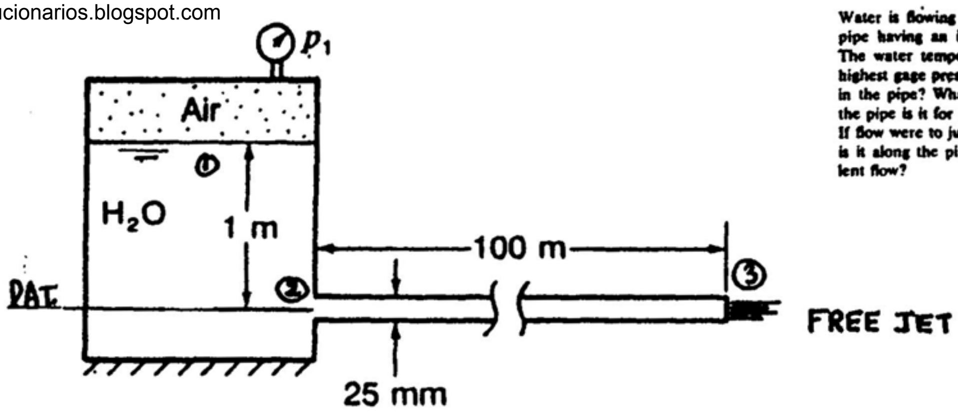


Water is flowing from a large tank through a pipe having an internal diameter of 25 mm. The water temperature is 70°C. What is the highest gage pressure $p_1$ to have laminar flow in the pipe? What is $p_1$ abs.? How far along the pipe is it for fully developed laminar flow? If flow were to just become turbulent, how far is it along the pipe for fully developed turbulent flow?

**Bernoulli between** (1) and (2).

$$\frac{V_1^2}{2} + gz_1 + \frac{p_1}{\rho} = \frac{V_2^2}{2} + gz_2 + \frac{p_2}{\rho} \qquad \therefore \quad \frac{p_2}{\rho} = \frac{p_1}{977.8} + (1)(9.81) - \frac{V^2}{2} \qquad (1)$$

**Modified Bernoulli between** (2) and (3). Use gauge pressures.

$$\frac{p_2}{\rho} + \frac{V^2}{2} + gz_2 = \frac{p_3}{\rho} + \frac{V^2}{2} + gz_3 + \frac{128\nu L\left(\frac{\pi}{4}\right)(D^2)(V)}{\pi D^4} \qquad (2)$$

Subst. from (1).

$$\left(\frac{p_1}{977.8} + 9.81 - \frac{V^2}{2}\right) = \frac{(128)(.415\times10^{-6})(100)\left(\frac{1}{4}\right)(V)}{(.025)^2} \qquad (3)$$

Look at $Re_{cr}$ . $\qquad 2{,}300 = \frac{(V)(.025)}{.415\times10^{-6}} \qquad \therefore \quad V = .0382 \quad m/s$

Subst. into (2). $\qquad \frac{p_1}{977.8} + 9.81 - \frac{.0382^2}{2} = \frac{(128)(.415\times10^{-6})(100)\left(\frac{1}{4}\right)(.0382)}{(.025)^2}$

$$\boxed{p_1 = -9.512\times10^3 \quad Pa\ gauge}$$

$\therefore \; p_1 = 101{,}325 - 9{,}512 = \boxed{91{,}813 \quad Pa\ abs.}$

**Pipe entrance conditions:**

Laminar Flow $\qquad L' = (.058)(2{,}300)(.025) = \boxed{3.335 \quad m}$

Turbulent Flow $\qquad L' = (4.4)(2{,}300)^{1/6}(.025) = \boxed{.3997 \quad m}$

Do Example 8.1 for the case of mercury. Take S.G. = 13.6 and $\nu$ = 1.4 × $10^{-6}$ $m^2/s$ for mercury. Use for $p_A$ the value 458 kPa gage.

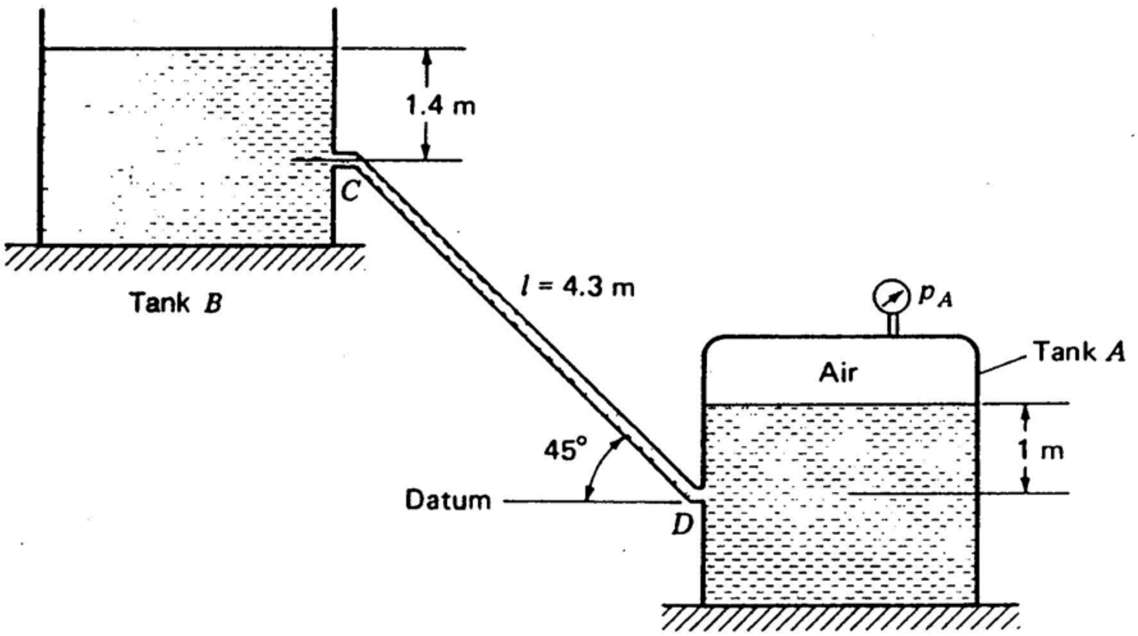


Determine **direction of flow.** Use thin stopper at $D$. Get pressure one each side.

**Tank A** $\quad p_1 = p_A + \gamma(1) + p_{atm} \qquad \gamma = (13.6)(9{,}806) = 1.334\times10^5$

$$\therefore \quad p_1 = 458{,}000 + p_{atm} + (1.334\times10^5)(1) = 5.914\times10^5 + p_{atm}$$

**Tank B** $\quad p_2 = p_{atm} + (1.334\times10^5)[1.4 + (4.3)(.707)] = 5.923\times10^5 + p_{atm}$

$\therefore$ **Goes from B to A**

**Modified Bernoulli** for tube.

$$\frac{p_C}{\rho} + \frac{V^2}{2} + gz_C = \frac{p_D}{\rho} + \frac{V^2}{2} + gz_D + h_l \qquad (1)$$

**Bernoulli in Tank B** (use gauge pressures)

$$(g)(1.4) = \frac{V^2}{2} + \frac{p_C}{\rho}$$

$$\therefore \quad \frac{p_C}{\rho} = 13.73 - \frac{V^2}{2} \qquad (2)$$

**Hydrostatics** at free jet in Tank A

$$\frac{p_D}{\rho} = \frac{1}{\rho}[458{,}000 + 1.334\times10^5(1)]$$

What is $\rho$ ?

$$\rho = \frac{\gamma}{g}\;\frac{(13.6)(9{,}806)}{9.806} = 1.360\times10^4$$

http://ingesolucionarios.blogspot.com

**(cont.)**

$$\therefore \quad \frac{p_D}{\rho} = 43.485$$

Substitute (2) and (3) into (1) $\quad \left(13.73 - \frac{V^2}{2}\right) + (9.806)(4.3)(.707) = 43.485 + h_\ell$

Assume laminar flow. $\quad h_\ell = \dfrac{(128)(4.3)(V)\left(\frac{\pi}{4}\right)(.006)^2(1.4\times10^{-6})}{(\pi)(.006)^4} = 5.351V$

$$\therefore \quad V^2 + 10.702V - .1124 = 0$$

$$V = \frac{-10.702 \pm \sqrt{10.702^2 + (4)(1{,}124)}}{2} = 1.05\times10^{-2}$$

$$Re = \frac{(1.05\times10^{-2})(.006)}{1.4\times10^{-6}} = 44.97$$

Laminar assumption ok. $\quad \therefore \; V = 1.05\times10^{-2}$ m/s

http://ingesolucionarios.blogspot.com
8.25

In Example 8.1 if a tiny pump were inserted in the tube, what is the power needed to cause the maximum laminar flow from tank *B* to tank *A*?

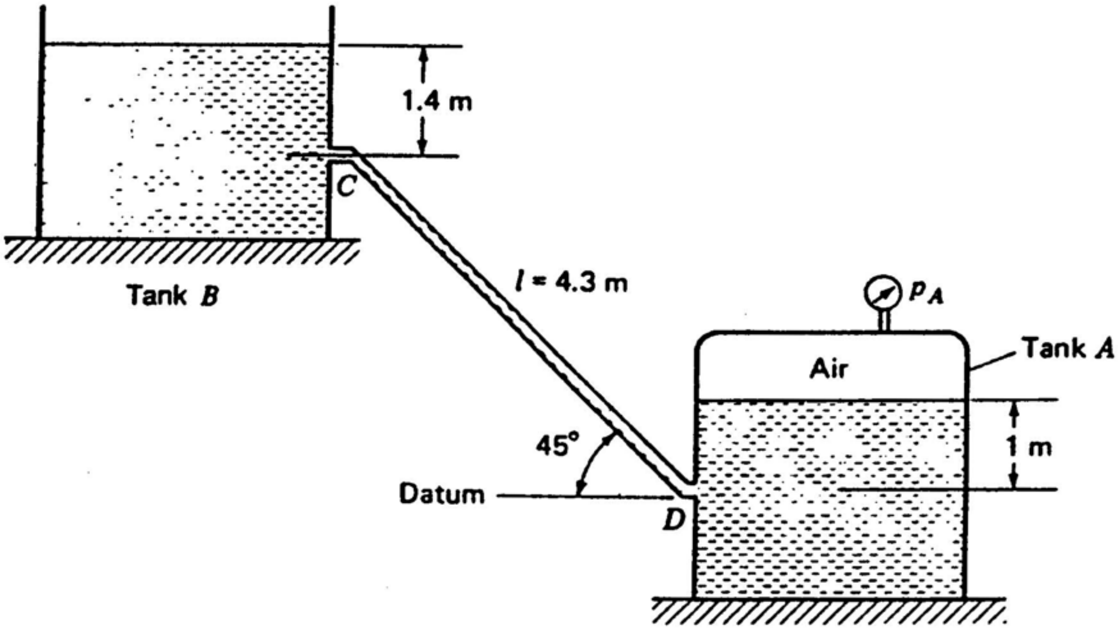


**First law for tube:**

$$\frac{V_C^2}{2} + \frac{p_C}{\rho} + gz_C = \frac{V_D^2}{2} + \frac{p_D}{\rho} + gz_D + \frac{dW_s}{dm} + h_l \qquad (1)$$

**Bernoulli in Tank B**

$$(g)(1.4) = \frac{V^2}{2} + \frac{p_C}{\rho} \qquad \therefore \quad \frac{p_C}{\rho} = 13.73 - \frac{V^2}{2}$$

**Hydrostatics in Tank A**

$$\frac{p_D}{\rho} = \frac{1}{\rho}[34{,}500 + (9{,}780)(1)]$$

$$\rho = \frac{9{,}780}{9.81} = 996.9 \quad kg/m^3 \qquad \therefore \quad \frac{p_D}{\rho} = 44.42 \qquad (3)$$

**Velocity** $V$ at $Re = 2{,}300$

$$2{,}300 = \frac{(V)(.006)}{\left(\frac{.0008}{996.9}\right)} \qquad V = .3076 \quad m/s \qquad (4)$$


http://ingesolucionarios.blogspot.com
Edu_Zegarr_ch

http://ingesolucionarios.blogspot.com
**(cont.)**

**Head Loss**

$$h_l = \frac{(128)(.0008)(4.3)(.3076)\left(\frac{\pi}{4}\right)(.006)^2}{(\pi)(996.9)(.006)^4} = .9435 \quad \frac{N-m}{kg} \qquad (5)$$

Go back to (1). Subst. (2) - (5).

$$\left[13.73 - \frac{(.3076)^2}{2}\right] + (9.81)[(4.3)(.707)] = 44.42 + \frac{dW_s}{dm} + .9435$$

$$\frac{dW_s}{dm} = -1.857$$

$$\frac{dW_s}{dt} = \left(\frac{dW_s}{dm}\right)\left(\frac{dm}{dt}\right) = (1.857)(996.9)\left(\frac{\pi}{4}\right)(.006)^2(.3076)$$

$$\boxed{POWER = .01610 \quad Watts}$$

http://ingesolucionarios.blogspot.com

http://ingesolucionarios.blogspot.com

8.26

A pipe receives water from a reservoir at the rate of $q$ L/s. The water is at 40°C. If the ratio of the distance $L'$ for flow to become fully developed to total length, $L = 50$ m, is to be no greater than 10% for laminar flow, what is the largest $q$? Do the same for turbulent flow for a diameter of 0.4 m.

**We require for laminar flow** $\left(\frac{L'}{L}\right) = .1$

$$\therefore \quad \frac{(.058)\dfrac{qD}{\left(\dfrac{\pi D^2}{4}\right)\nu}D}{L} = .1$$

$$\therefore \quad q = \frac{(.1)(50)(\pi)(.661\times10^{-6})}{(.058)(4)} = 4.475\times10^{-5}\ m^3/s = .04475\ L/s$$

**For turbulent flow**

$$\frac{4.4\left[\dfrac{\left(\dfrac{q}{\dfrac{\pi D^2}{4}}\right)D}{\nu}\right]^{\frac{1}{6}}D}{L} = .1$$

$$\frac{(4.4)\left[\dfrac{\dfrac{4q}{1{,}000}}{\pi D\nu}\right]^{\frac{1}{6}}D}{50} = .1$$

$$\therefore \quad \frac{4.4}{50}\left[\frac{\dfrac{4q}{1{,}000}}{(\pi)(.4)(.661\times10^{-6})}\right]^{\frac{1}{6}}(.4) = .1$$

$$q = .1092\ \ L/s = .1092\times10^{-3}\ m^3/s = 10.92\times10^{-5}\ m^3/s$$


http://ingesolucionarios.blogspot.com Edu_Zegarr_ch

http://ingesolucionarios.blogspot.com

8.27 **Look up** $\mu$

In a 50-mm pipe having a length of 50 m transporting crude oil at a temperature of 40°C at an average velocity of 0.02 m/s, what percentage of the pipe length is taken before fully developed viscous flow is present? What is the percentage if the average velocity is 0.30 m/s? The specific gravity of the oil is 0.86.

$$\mu = (1.05\times10^{-4})(47.9) = 5.03\times10^{-3} \quad N\text{-}s/m^2$$

$$\nu = (6.8)(.0929)\times10^{-5} = 6.32\times10^{-6} \quad \frac{m^2}{s}$$

**Case a**

$$Re = \frac{(.02)(.050)}{6.32\times10^{-6}} = 158.2$$

∴ Flow is **laminar** $\quad \frac{L_e}{D} = (.06)(Re) = (.06)(158.2) \qquad Le = .4746 \quad m$

$$Percentage = \left(\frac{.4746}{50}\right)(100) = \boxed{.9492\%}$$

**Case b**

$$Re = \frac{(.3)(.050)}{6.32\times10^{-6}} = 2.373\times10^3$$

∴ Flow is **turbulent**

$$\frac{Le}{D} = (4.4)(Re)^{\frac{1}{6}} = (4.4)(2.373\times10^3)^{\frac{1}{6}}$$

$$Le = .8035 \quad m$$

$$Percentage = \left(\frac{.8035}{50}\right)(100) = \boxed{1.607\%}$$

---

Consider the pipe entrance flow of water at 60°C into a pipe of diameter 100 mm.
1. What is the maximum distance in diameters for fully developed laminar flow to be established?
2. What is the minimum distance in diameters for fully developed turbulent flow to be established?

8.28 Set $Re_D = 2,300$

a) **For laminar flow**

$$L'_{max} = (.058)(2,300)(.100) = 13.34 \ m = 133.4 \ diameters$$

b) **For turbulent flow**

$$L'_{min} = (4.4)(2,300)^{\frac{1}{6}}(.100) = 1.599 \ m = 15.99 \ diameters$$

http://ingesolucionarios.blogspot.com

8.29

Compute the friction factors for flow having a Reynolds number and relative roughness given for the following two cases as

(a) $\begin{cases} Re = 5 \times 10^3 \\ \frac{e}{D} = 0.015 \end{cases}$ Transition zone

(b) $\begin{cases} Re = 4 \times 10^6 \\ \frac{e}{D} = 0.0001 \end{cases}$ Rough-pipe zone

Use the Colbrook formula, the Swamee-Jain formula, and the Moody diagram. Comment on the comparison of results.

a) From **Moody** diagram $f = .0512$

From **Colebrook** formula

$$\frac{1}{\sqrt{f}} = 1.14 - 2.0\log\left[.015 + \frac{935}{5\times10^3\sqrt{f}}\right]$$

By trial and error $f = .0522$

From **Swamee-Jain**

$$f = \frac{.25}{\left\{\log\left[\frac{.015}{3.7} + \frac{5.74}{Re^{.9}}\right]\right\}^2} = .0530$$

b) From **Moody** diagram $f = .0125$

From **Colebrook** formula $f = \frac{1}{[1.14 - .86\ln(.0001)]^2} = .0122$

From **Swamee-Jain**

$$f = \frac{.25}{\left\{\log\left[\frac{.0001}{3.7} + \frac{5.74}{(4\times10^6)^{.9}}\right]\right\}^2} = .01249$$

Results are close to each other.



http://ingesolucionarios.blogspot.com Edu_Zegarr_ch

http://ingesolucionarios.blogspot.com

8.30

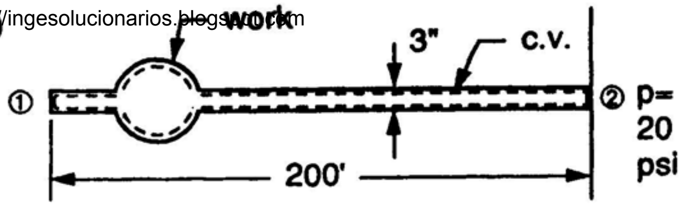


$$\begin{cases} q = .1 \quad cfs \\ \mu = 2.11\times10^{-5} \quad lb\text{-}sec/ft^2 \end{cases}$$

We write the **first law of thermodynamics** using the head loss concept for the control volume shown:

What horsepower is required for a pump which will move 0.1 ft³/s of water having a viscosity of 2.11 × 10⁻⁵ lb · s/ft² through a 3-in pipe of length 200 ft to discharge at the same elevation at a pressure of 20 lb/in² absolute? Pipe is commercial steel. The intake pressure is atmospheric.

$$\frac{V_1^2}{2} + \frac{p_2}{\rho} = \frac{V_2^2}{2} + \frac{p_2}{\rho} + h_\ell + \frac{dW_s}{dm}$$

Since $V_1 = V_2$ and $p_1 = 0$ , using gauge pressures we have:

$$\frac{dW_s}{dm} = -\left(\frac{p_2}{\rho} + h_\ell\right) \qquad \text{(a)}$$

To get head loss, we first examine the Reynolds number for the flow.

$$Re = \frac{(1.94)\left[\dfrac{.1}{\dfrac{\pi}{4}\left(\dfrac{1}{4}\right)^2}\right]\left(\dfrac{1}{4}\right)}{2.11\times10^{-5}} = 46{,}800$$

Thus we have turbulent flow. From Table 8.1 we get:

$$\frac{e}{D} = .00060$$

From **Moody's** diagram we have for $f$ : $f = .023$

Hence

$$h_\ell = (.023)\left(\frac{200}{\frac{1}{4}}\right)\frac{\left[\dfrac{0.1}{\left(\dfrac{\pi}{4}\right)\left(\dfrac{1}{4}\right)^2}\right]^2}{2} = 38.2$$

Hence from Eq. (a) $\dfrac{dW_s}{dm} = -\left[\dfrac{(5.3)(144)}{1.938} + 38.2\right] = -432$

$$\frac{dW_s}{dt} = \left(\frac{dW_s}{dm}\right)\left(\frac{dm}{dt}\right) = -(432)(1.938)(.1) = -83.7 \ \frac{ft.lb.}{sec} = -.1522 \ HP$$

Pump delivers .1522 *HP* on water.

http://ingesolucionarios.blogspot.com

8.31

$$\begin{cases} L = 65 \quad m \\ \dfrac{e}{D} = .0001 \\ D = 200 \quad mm \end{cases}$$

A fire truck has its hose connected to a hydrant where the pressure is $7 \times 10^4$ Pa gage. The hose then connects up to a pump run by the engine of the fire truck. From here there extends hose to a fire fighter who, while crouching, is aiming the water at a 60° angle with the ground to enter a window on the third floor 13 m above the nozzle at the end of the hose. As the water goes through the window, it is moving parallel to the ground. The total length of hose is 65 m with 200-mm diameter. The exit diameter of the nozzle is 100 mm. Take $e/D$ for hose as 0.0001. What power is needed from the pump on the water? Take the nozzle exit to have same elevation as the hydrant outlet. Neglect minor losses. Take $\nu = 0.113 \times 10^{-5}$ m²/s.

Look at jet. **Bernoulli** for jet.

$$\frac{V^2}{2} + \frac{p}{\rho} + 0 = \frac{(V\cos 60°)^2}{2} + 13g$$

$$\frac{V^2}{2} - \left(\frac{V^2}{2}\right)\left(\frac{1}{4}\right) = (9.81)(13)$$

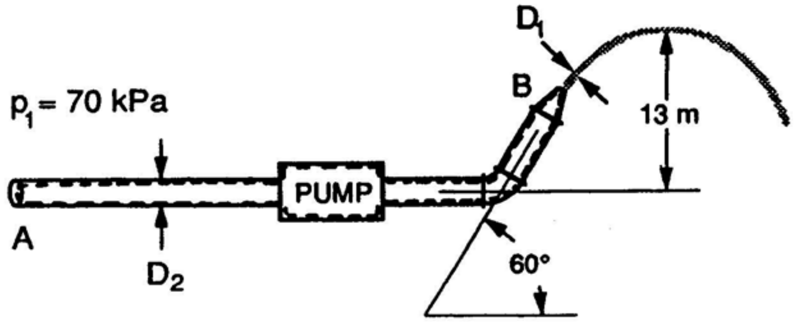


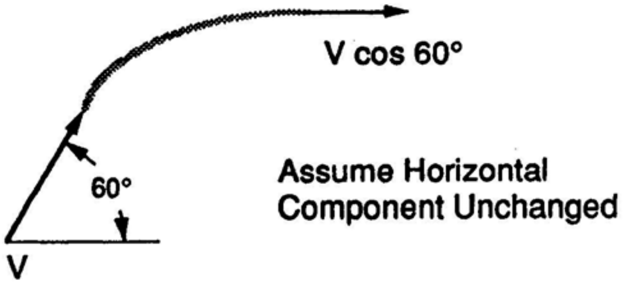


$$\therefore \quad \frac{V^2}{2} = 340 \qquad V = 18.44 \quad m/s$$

$$V_{in\ pipe} = \left(\frac{D_1}{D_2}\right)^2 (V) = \left(\frac{100}{200}\right)^2 V = \left(\frac{1}{4}\right)(18.44) = 4.61 \quad m/s$$



http://ingesolucionarios.blogspot.com Edu_Zegarr_ch

http://ingesolucionarios.blogspot.com

**(cont.)**

**First law** for control volume inside pipe.

$$\frac{V_A^2}{2}+\frac{p_A}{\rho}+gy_A=\frac{V_B^2}{2}+\frac{p_B}{\rho}+gy_B+(h_\ell)+\frac{d\dot{W}_s}{dm}$$

$$\frac{4.61^2}{2}+\frac{70{,}000}{1{,}000}=\frac{18.44^2}{2}+0+f\left(\frac{L}{D}\right)\left(\frac{V^2}{2}\right)+\left(\frac{dW_s}{dm}\right)$$

$$\therefore\quad \frac{dW_s}{dm}=\frac{4.61^2}{2}+70-\frac{18.44^2}{2}-f\left(\frac{65}{.200}\right)\left(\frac{4.61^2}{2}\right) \qquad \text{(a)}$$

$$Re=\frac{VD}{\nu}=\frac{(4.61)(.200)}{.113\times10^{-5}}=8.16\times10^5$$

$$\therefore\quad f=.0138$$

$$\frac{dW_s}{dm}=-137.05\quad\frac{N\text{-}m}{kg}$$

$$\frac{dW_s}{dm}=\left(\frac{dW_s}{dt}\right)\left(\frac{dt}{dm}\right)$$

$$137.05=\left(\frac{dW_s}{dt}\right)\left(\frac{1}{\frac{(1{,}000)(4.61)(\pi)(.2^2)}{4}}\right)$$

$$\frac{dW_s}{dt}=-19{,}849\quad\frac{N\text{-}m}{s}=-19.85\quad kW$$

http://ingesolucionarios.blogspot.com

8.32

If 565 L/s of flow is to be moved from $A$ to $B$, what power is needed from pump to water? Take $\nu = 0.1130 \times 10^{-5}$ m²/s.

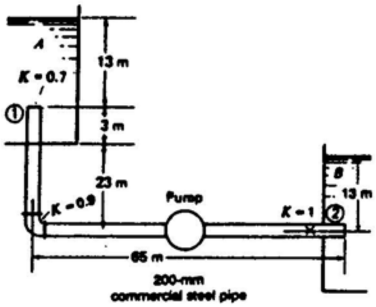


Choose control volume inside pipe and pump from (1) to (2). Use bottom pipe as datum and use gauge pressures.

**First Law**

$$\frac{V_1^2}{2} + \frac{p_1}{\rho} + gz_1 = \frac{V_2^2}{2} + \frac{p_2}{\rho} + gz_2 + \frac{dW_s}{dm} + (h_l) + (h_l)_M$$

From **Bernoulli** and gauge pressures between A and 1.

$$13g = \frac{V_1^2}{2} + \frac{p_1}{\rho}$$

$$\frac{p_1}{\rho} = 13g - \frac{V_1^2}{2}$$

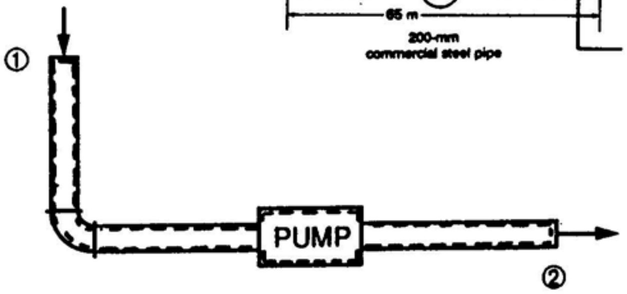


$$\therefore \quad \left[13g - \frac{V^2}{2}\right] + 26g - \frac{dW_s}{dm} = \frac{(13)(9{,}806)}{1{,}000} + f\left(\frac{91}{.200}\right)\left(\frac{V^2}{2}\right) + 2.6\left(\frac{V^2}{2}\right) \qquad \text{(a)}$$

$$V = \frac{Q}{A} = \frac{\left(\frac{565}{1{,}000}\right)}{\left(\frac{\pi}{4}\right)(.200)^2} = 17.98 \quad m/s \qquad \text{(b)}$$

$$Re = \frac{(17.98)(.200)}{.113\times10^{-5}} = 3.18\times10^6$$

$$f = .0141 \qquad \text{(c)}$$

Substitute (b) and (c) into (a). Solve for $dW_s/dm$ .

$$\frac{dW_s}{dm} = -1{,}364 \quad \frac{N-m}{kg}$$

$$\frac{dW_s}{dt} = -(1{,}364)(\rho Q) = -(1{,}364)\left(\frac{565}{1{,}000}\right)(1{,}000) = -7.705\times10^5 \quad \frac{N-m}{sec} = \boxed{770.5\ kW}$$

8.33

What gage pressure $p_1$ is required to cause 5 ft$^3$/s of water to flow through the system? Assume that the reservoir is large. Neglect minor losses. Take $\mu = 2.11 \times 10^{-5}$ ft$^2$/s.

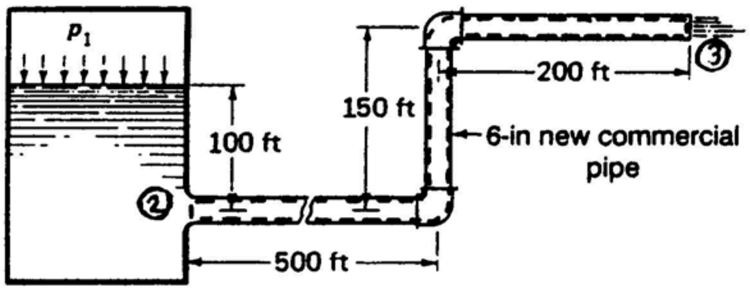


$$V = \frac{5}{\left(\frac{\pi}{4}\right)\left(\frac{1}{2}\right)^2} = 25.5 \quad ft/\text{sec}$$

$$Re = \frac{(1.938)(25.5)\left(\frac{1}{2}\right)}{2.11\times10^{-5}} = 1.176\times10^6$$

$$\frac{e}{D} = .00028 \qquad f = .0155$$

$$\therefore \quad h_\ell = (.0155)\left(\frac{850}{\frac{1}{2}}\right)\left(\frac{25.5^2}{2}\right) = 8{,}567$$

Now use **first law** for C.V. shown. Thus, noting that $V_2 = V_3$ and using gauge pressures, we have:

$$\frac{p_2}{\rho} = 150g + 8{,}567 \qquad \therefore \quad p_2 = 25{,}990 \quad psf\ g$$

Use **Bernoulli** between (1) and (2). We get:

$$\frac{p_1}{\rho} = \left(\frac{p_2}{\rho} + \frac{V^2}{2} - 3{,}220\right)$$

$$p_1 = 25{,}990 + 631 + 6{,}250 = \boxed{228.5\ psig}$$

 http://ingesolucionarios.blogspot.com

In Prob. 8.33 take the diameter of the pipe to be the *nominal* diameter. For the entrance fitting, $r/d = 0.06$. Calculate the pressure $p_1$. The elbows are screwed elbows and there is now an open globe valve in the pipe system. Include minor losses.

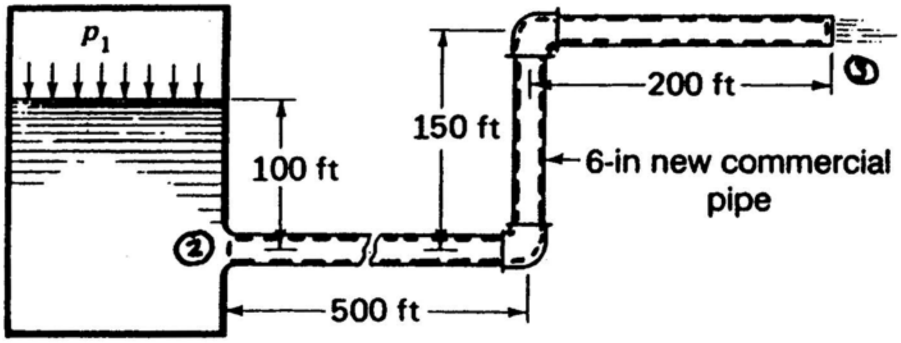


Use the diagram of the previous solution.

$$V = \frac{5}{\left(\frac{28.87}{144}\right)} = 24.92 \quad ft/sec$$

$$Re = \frac{\frac{(1.938)(24.92)(6.065)}{12}}{2.11\times10^{-5}} = 1.157\times10^{6}$$

$$\frac{e}{D} = (.00028)\left(\frac{6}{6.065}\right) = 2.770\times10^{-4} = .000277$$

$$f = .0155$$

Use **first law** for C.V.

$$\frac{p_1}{\rho} = 150g + (.0155)\left(\frac{850}{\frac{6.065}{12}}\right)\left(\frac{24.92^2}{2}\right) + [.15+(2)(.45)+5.1]\left(\frac{24.92^2}{2}\right)$$

$$\frac{p_1}{\rho} = 14{,}834 \qquad \boxed{p_1 = 28{,}777\ psfg}$$



http://ingesolucionarios.blogspot.com Edu_Zegarr_ch

http://ingesolucionarios.blogspot.com

8.35

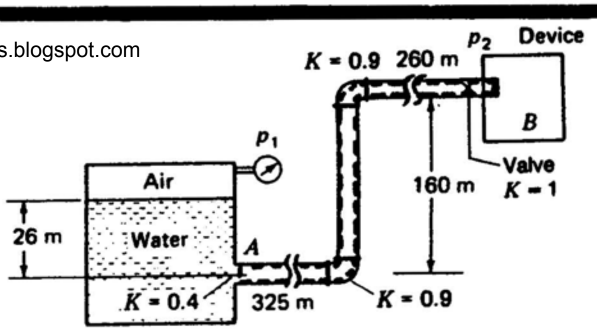


What pressure $p_1$ is needed to cause 100 L/s of water to flow into the device at a pressure $p_2$ of 40 kPa gage? The pipe is 150-mm commercial pipe. Take $\nu = 0.113 \times 10^{-5}$ m²/s.

**First law** for C.V. of interior of pipe.

$$\frac{p_A}{\rho} + \frac{V_A^2}{2} + gz_A = \frac{p_B}{\rho} + \frac{V_B^2}{2} + gz_B + (h_l) + (h_l)_M$$

Use **Bernoulli** between free surface and A.

$$26g + \frac{p_1}{\rho} = \frac{p_A}{\rho} + \frac{V^2}{2}$$

$$\frac{p_A}{\rho} = 26g + \frac{p_1}{\rho} - \frac{V^2}{2}$$

$$\therefore \quad \left[26g + \frac{p_1}{\rho} - \frac{V^2}{2}\right] = \frac{p_B}{\rho} + 160g + (h_l) + (h_l)_M \qquad \text{(a)}$$

$$V = \frac{\dfrac{100}{1{,}000}}{\left[\dfrac{(\pi)(.150)^2}{4}\right]} = 5.66 \quad m/\text{sec}$$

$$Re = \frac{VD}{\nu} = \frac{(5.56)(.15)}{.113\times10^{-5}} = 7.513\times10^5$$

$$\frac{e}{D} = .000307 \qquad f = .016$$

Subst. into Eq. (a)

$$26g + \frac{p_1}{1{,}000} - \frac{5.66^2}{2} = \frac{40{,}000}{1{,}000} + 160g + (.016)\left(\frac{745}{.150}\right)\left(\frac{5.66^2}{2}\right) + 3.2\left(\frac{5.66^2}{2}\right)$$

$$\therefore \quad p_1 = 2.69\times10^6 \quad Pa \ g \quad = 2.69\times10^3 \quad kPa \ g$$



http://ingesolucionarios.blogspot.com Edu_Zegarr_ch

8.36

What pressure $p_1$ is required to cause 1 $ft^3/s$ of water to flow into a device where the pressure $p_2$ is 5 $lb/in^2$ gage? Take $\mu = 2.11 \times 10^{-5}\ lb \cdot s/ft^2$ for water.

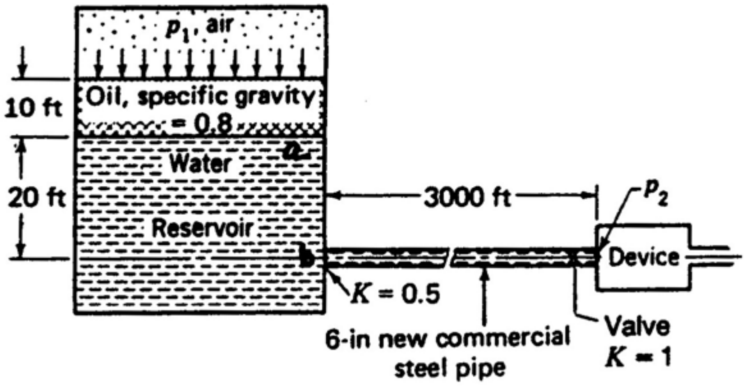


The pressure at "a" can be found by **hydrostatics** as follows:

$$p_a = p_1 + (.8)(62.4)(10) = p_1 + 499.2$$

Using **Bernoulli** between "a" and "b" we have:

$$\frac{p_a}{\rho} + 20g = \frac{p_b}{\rho} + \frac{V^2}{2}$$

$$\therefore \quad \frac{p_b}{\rho} = \frac{(p_1+499.2)}{\rho} + 644 - \frac{5.09^2}{2} = \frac{p_1}{\rho} + 888 \qquad \text{(a)}$$

Now use **first law** for C.V.

$$\frac{p_b}{\rho} = \frac{p_2}{\rho} + h_t$$

$$\frac{p_b}{\rho} = \frac{(5)(144)}{1.938} + f\left(\frac{3,000}{\frac{1}{2}}\right)\left(\frac{5.09^2}{2}\right) + (1.5)\left(\frac{5.09^2}{2}\right)$$

Use Eq. (a).

http://ingesolucionarios.blogspot.com

**(cont.)**

$$\frac{p_1}{\rho} + 888 = 371.5 + f(77{,}700) + 19.43$$

$$\frac{p_1}{\rho} = f(77{,}700) - 497.1 \qquad \text{(b)}$$

To get $f$ note that $\frac{e}{D} = .00030$

$$Re = \frac{(1.938)(5.09)\left(\frac{1}{2}\right)}{2.11\times10^{-5}} = 2.34\times10^{5}$$

$$\therefore \quad f = (.0175)$$

Going back to (b) we have

$$p_1 = 1.938[(.0175)(77{,}700) - 497.1] = 1{,}672 \ psf\,g = 11.61 \ psi\,g$$



http://ingesolucionarios.blogspot.com Edu_Zegarr_ch

http://ingesolucionarios.blogspot.com

8.37

We have oil of kinematic viscosity $8 \times 10^{-5}$ $ft^2/s$ going through an 80-ft horizontal pipe. If the initial pressure is 5 $lb/in^2$ gage and the final pressure is 3.5 $lb/in^2$ gage. compute the mass flow if the pipe has a diameter of 3 in. At a point 10 ft from the end of the pipe a vertical tube is attached to the pipe to be flush with the inside radius of the pipe. How high will the oil rise in the tube? $\rho = 50\ lbm/ft^3$. Pipe is commercial steel.

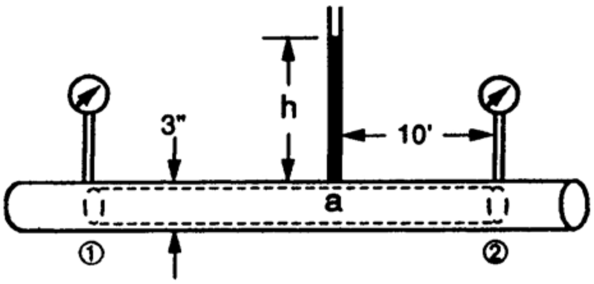


$$\begin{cases} \nu = 8\times10^{-5} \quad ft^2/sec \\ L = 80 \quad ft \\ p_1 = 5 \quad psig \\ p_2 = 3.5 \quad psig \\ \gamma = 50 \quad lb/ft^3 \end{cases}$$

Write the **first law of thermo.** for C.V. shown.

$$\frac{V_1^2}{2} + \frac{p_1}{\rho} = \frac{V_2^2}{2} + \frac{p_2}{\rho} + h_\ell \qquad \text{(a)}$$

But $V_1 = V_2$ from **continuity**. We then have:

$$h_\ell = \frac{(1.5)(144)}{\dfrac{(50)}{(32.2)}} = 139.1$$

We can then say: $\quad f\left(\frac{L}{D}\right)\left(\frac{V^2}{2}\right) = 139.1 \qquad \frac{e}{D} = .00058$

Try $\quad f = .02$

$$(.02)\left(\frac{80}{\frac{1}{4}}\right)\left(\frac{V^2}{2}\right) = 139.1$$

$$V = 6.59 \quad ft/sec$$

Compute $Re$. $\quad Re = \dfrac{(6.59)\left(\frac{1}{4}\right)}{8\times10^{-5}} = 2.06\times10^4 \qquad \therefore \quad f = .0265$



http://ingesolucionarios.blogspot.com Edu_Zegarr_ch

http://ingesolucionarios.blogspot.com

**(cont.)**

We then say: $(.0265)\left(\frac{80}{\frac{1}{4}}\right)\left(\frac{V^2}{2}\right) = 139.1$ $\qquad V = 5.73 \ \ ft/\text{sec}$

Compute *Re* using Eq. (b): $Re = \left(\frac{5.73}{6.59}\right)(2.06\times10^4) = 1.790\times10^4$

This gives: $f = .0267$

Hence $(.0267)\left(\frac{80}{\frac{1}{4}}\right)\left(\frac{V^2}{2}\right) = 139.1$ $\qquad V = 5.71 \ \ ft/\text{sec}$

We need not iterate further. The **mass flow** is then:

$$(50)(5.71)\left[\left(\frac{\pi}{4}\right)\left(\frac{1}{4}\right)^2\right] = 14 \quad lbm/\text{sec}$$

(b) Find the pressure at point "a". Thus we can say

$$\frac{p_1}{\rho} = \frac{p_a}{\rho} + h_\ell$$

$$\frac{p_a}{\rho} = \frac{(5)(144)}{1.553} - f\left(\frac{70}{\frac{1}{4}}\right)\left(\frac{5.71^2}{2}\right)$$

Using $f = .0267$ we get:

$$p_a = 720 - (1.553)(.0267)(280)\left[\frac{(5.71)^2}{2}\right] = 531 \quad psf$$

$$\therefore \quad h = \frac{p_a}{\gamma} = \frac{531}{50} = \boxed{10.61 \ ft}$$

http://ingesolucionarios.blogspot.com Edu_Zegarr_ch 

http://ingesolucionarios.blogspot.com

What is the flow $q$ from $A$ to $B$ for the system shown? Get up to the second iteration. Take $\nu = 0.113 \times 10^{-5}$ m²/s.

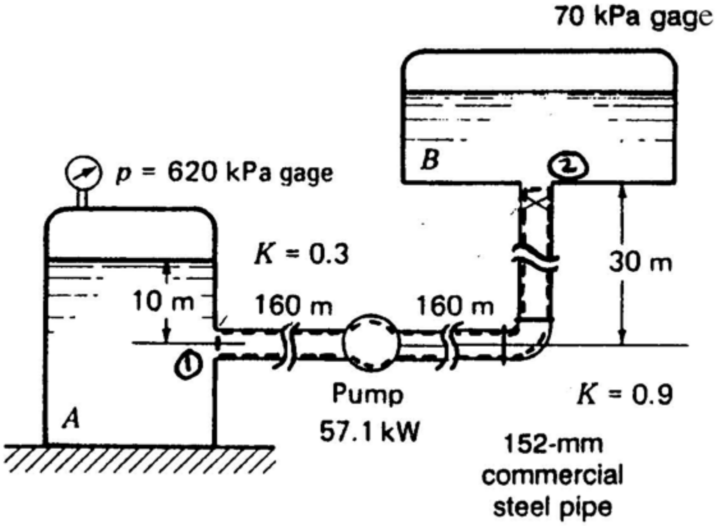


**First law** for C.V.

$$\frac{p_1}{\rho} + \frac{V_1^2}{2} + 0 - \frac{dW_s}{dm} = \frac{p_2}{\rho} + \frac{V_2^2}{2} + 30g + f\left(\frac{350}{.152}\right)\frac{V^2}{2} + 1.2\,\frac{V^2}{2} \qquad \text{(a)}$$

$$\frac{dW_s}{dm} = -\frac{57{,}100}{\rho q} = \frac{-57{,}100}{(1{,}000)(V)\frac{\pi}{4}(.152)^2} = \frac{-3149}{V}$$

**Bernoulli** between $A$ and 1 .

$$\frac{620{,}000}{1{,}000} + 0 + 10g = \frac{p_1}{\rho} + \frac{V^2}{2} + 0$$

$$\frac{p_1}{\rho} = 718 - \frac{V^2}{2} \qquad \text{(b)}$$

At position 2 from **hydrostatics:**

$$p_2 = 70{,}000 + (9{,}806)(6) = 1.288\times10^5 \quad Pa \qquad \text{(c)}$$

Let $f = .015$ and substitute (b) and (c) into (a).

$$\left(718 - \frac{V^2}{2}\right) + \frac{3{,}149}{V} = \frac{1.288\times10^5}{1{,}000} + 30g + (.015)\left(\frac{350}{.152}\right)\left(\frac{V^2}{2}\right) + 1.2\,\frac{V^2}{2}$$

http://ingesolucionarios.blogspot.com Edu_Zegarr_ch

http://ingesolucionarios.blogspot.com

**(cont.)**

Multiply by $V$ and collect terms.

$$18.37V^3 - 295V - 3{,}149 = 0$$

Solve by trial and error.

$$V = 6.51 \quad m/s$$

$$Q = VA = (6.51)\left(\frac{\pi}{4}\right)(.152)^2 = .1181 \quad m^3/s = 118.7 \quad L/sec$$

$$Re = \frac{VD}{\nu} = \frac{(6.51)(.152)}{.113\times10^{-5}} = 8.76\times10^5 \qquad \therefore \quad f = .016$$

$$\therefore \quad 19.52V^3 - 295V - 3{,}149 = 0 \qquad V = 6.36 \quad m/sec$$

$$Q = VA = (6.36)\left(\frac{\pi}{4}\right)(.152)^2 = .1154 \quad m^3/sec$$

$$Q = 115.4 \quad L/sec$$

http://ingesolucionarios.blogspot.com Edu_Zegarr_ch

http://ingesolucionarios.blogspot.com

What thrust does the water exert on the pipe in the horizontal direction? Water issues out as a free jet. Take $\mu = 2.11 \times 10^{-5}$ lb · s/ft². Neglect minor losses.

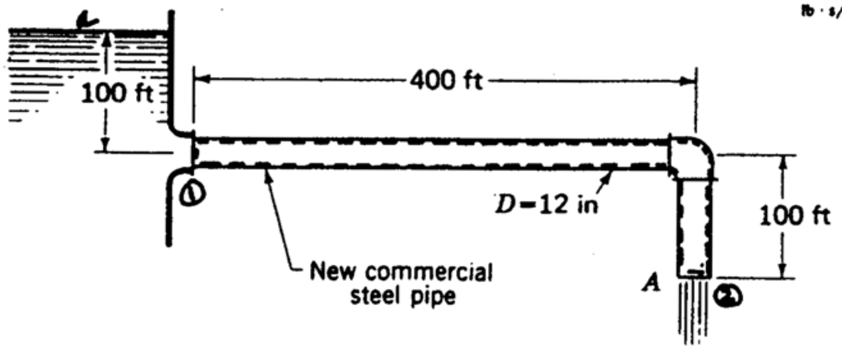


We first compute the flow. Using the control volume shown we have using the **first law of thermodynamics** and **continuity**:

$$\frac{p_1}{\rho} + 100g = (h_l)_T = f\left(\frac{500}{1}\right)\left(\frac{V^2}{2}\right) \qquad \text{(a)}$$

Use **Bernoulli** between (1) and (a).

$$\frac{p_1}{\rho} = 100g - \frac{V^2}{2} \qquad \text{(b)}$$

Use $f$=.015 . We then have

$$200g - \frac{V^2}{2} = (.015)(250)(V^2) \qquad V = 38.9 \quad ft/s$$

$$\therefore \quad Re = \frac{(1.938)(38.9)(1)}{2.11 \times 10^{-5}} = 3.58 \times 10^6 \qquad f = .013$$

Recompute $V$. $\qquad V = 41.4 \quad ft/sec$

Now we use the **linear momentum equation** in the horizontal direction for the control volume. Using gauge pressures, we see that:

$$F_x + p_1\left(\frac{\pi}{4}\right) = -(\rho)(41.4)^2\left(\frac{\pi}{4}\right)$$

Using Eq. (b) for $p_1$ we have:

$$F_x = (-3220 + \frac{41.4^2}{2} - 41.4^2)(1.938)\left(\frac{\pi}{4}\right) = -6{,}205 \quad lb$$

Reaction is the force on the pipe.

$$K_x = 6{,}205 \quad lb$$


http://ingesolucionarios.blogspot.com Edu_Zegarr_ch

http://ingesolucionarios.blogspot.com

8.40

Do Prob. 8.39 when considering minor losses. Take the pipe diameter to be the nominal diameter and for the flanged elbow $r/d = 14$. What is the percentage error incurred in this problem by neglecting the minor losses? The $r/d$ for the entrance fitting is 0.04. The thrust in the previous problem is 6212 lb.

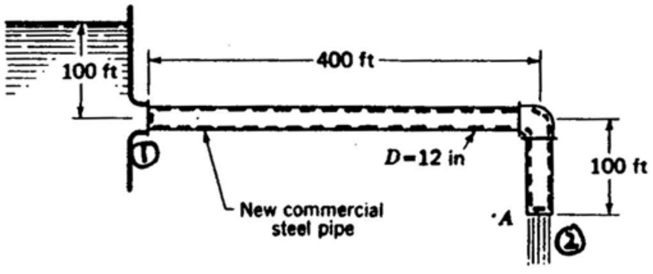


Note first that the nominal diameter equals the inside diameter for this case. The **first law** for the inside of the pipe is:

$$\frac{p_1}{\rho} + 100g = f\left(\frac{500}{1}\right)\left(\frac{V^2}{2}\right) + (.24 + .49)\left(\frac{V^2}{2}\right) \qquad \text{(a)}$$

Use **Bernoulli** between (a) and (1).

$$\frac{p_1}{\rho} = 100g - \frac{V^2}{2} \qquad \text{(b)}$$

For $f = .015$ we have:

$$\left(100g - \frac{V^2}{2}\right) + 100g = (.015)(250)V^2 + .365V^2 \qquad \therefore \quad V = 37.36 \ \ ft/sec$$

$$Re = \frac{(1.938)(37.36)(1)}{2.11\times10^{-5}} = 3.43\times10^6 \qquad \therefore \quad f = .0131$$

Recompute $V = 39.4$ *ft*/sec . Now use the **linear momentum** equation

$$F_x + p_1\left(\frac{\pi}{4}\right)(1^2) = -(\rho)(39.4^2)\left(\frac{\pi}{4}\right)(1^2)$$

Using Eq. (b) for $p_1$ we have

$$F_x = \left(\frac{39.4^2}{2} - 3{,}220\right)(1.938)\left(\frac{\pi}{4}\right) - (1.938)(39.4^2)\left(\frac{\pi}{4}\right)$$

$$F_x = -6{,}083 \quad lb \qquad \therefore \quad K_x = 6{,}083 \quad lb$$

$$Error = \frac{6{,}212 - 6{,}083}{6{,}083}(100) = 2.12\%$$

How much water is flowing through the 150-mm commercial steel pipe? Take $\nu = 0.113 \times 10^{-5}$ $m^2/s$.

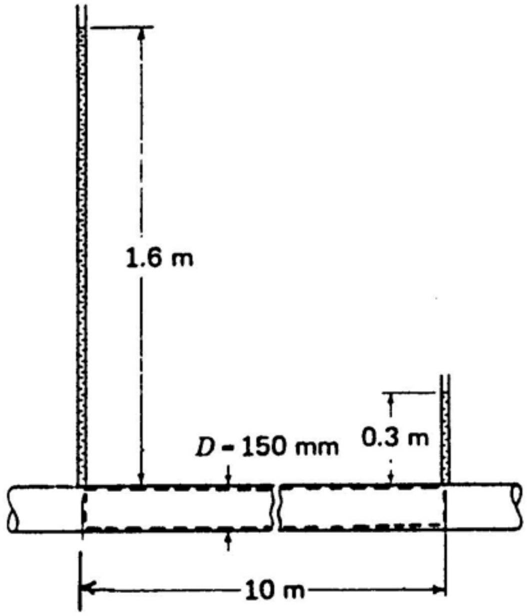


Using **first law of thermo.** we have: $$\frac{p_1}{\rho} = \frac{p_2}{\rho} + h_\ell$$

$$\frac{p_1 - p_2}{\rho} = \frac{(1.3)(\gamma)}{\rho} = 1.3g$$

$$\therefore \quad (1.3)(g) = (h_\ell) = f\left(\frac{10}{.150}\right)\left(\frac{V^2}{2}\right)$$

Assume $f$=.015 . Then: $V = 5.05 \quad m/\text{sec}$

$$R_{ey} = \frac{(5.05)(.150)}{.1130 \times 10^{-5}} = 6.704 \times 10^5$$

We recompute $f$ . $f = .016$

Then $V = 4.89 \quad m/s$

$$\frac{dm}{dt} = (4.89)\left(\frac{\pi}{4}\right)(.150)^2(1{,}000) = \boxed{86.4 \quad kg/s}$$

8.42 http://ingesolucionarios.blogspot.com

Gasoline at 20°C is being siphoned from a tank through a rubber hose having an insider diameter of 25 mm. The relative roughness for the hose is 0.0004. What is the flow of gasoline? What is the minimal pressure in the hose? The total length of hose is 9 m and the length of hose to point *A* is 3.25 m. Neglect minor loss at hose entrance.

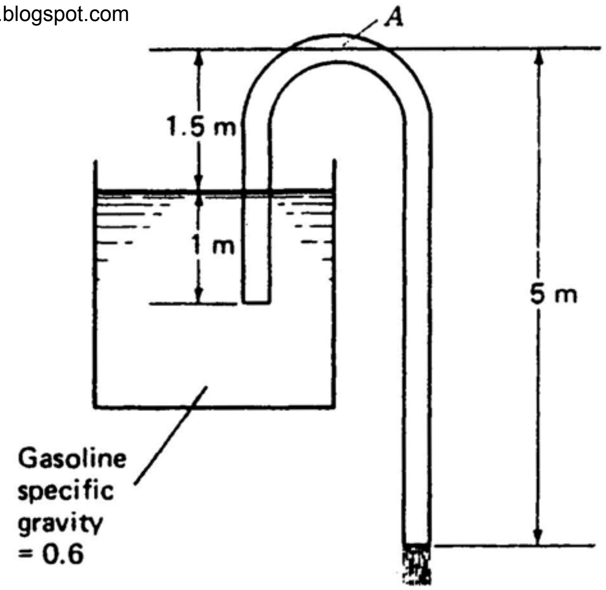


**Bernoulli** between free surface and hose in the tank

$$(g)(1) = \frac{p_1}{\rho} + \frac{V^2}{2}$$

$$\frac{p_1}{\rho} = 9.81 - \frac{V^2}{2} \qquad (1)$$

**Modified Bernoulli** in hose (use bottom of hose as datum and use Eq. (1)).

$$\left(9.81 - \frac{V^2}{2}\right) + \frac{V^2}{2} + (g)(2.5) = \frac{V^2}{2} + f\left(\frac{L}{D}\right)\left(\frac{V^2}{2}\right)$$

Assume $f$=.016 .

$$9.81 + (2.5)(9.81) = \frac{V^2}{2} + (.016)\left(\frac{9}{.025}\right)\left(\frac{V^2}{2}\right) \qquad V = 3.18 \quad m/\text{sec}$$

$$Re = \frac{(3.18)(.025)}{4.8\times10^{-7}} = 1.656\times10^5 \qquad \therefore \; f = .019$$

Go another cycle.

$$9.81 + (2.5)(9.81) = \frac{V^2}{2} + (.019)\left(\frac{9}{.025}\right)\left(\frac{V^2}{2}\right) \qquad V = 2.960 \quad m/\text{sec}$$

$$Re = \frac{(2.960)(.025)}{4.8\times10^{-7}} = 1.541\times10^5 \qquad f = .019$$

http://ingesolucionarios.blogspot.com

(cont.)

Hence,

$$q = \left(\frac{\pi}{4}\right)(.025)^2(2.960)$$

$$q = 1.453 \quad L/s$$

To get $p_{min}$ use **Bernoulli** from entrance of hose to uppermost point. Using Eq. (1) we get with entrance to hose as a datum:

$$\left(9.81 - \frac{V^2}{2}\right) + \frac{V^2}{2} = \frac{V^2}{2} + \frac{p_{min}}{\rho} + 2.5g + (.019)\left(\frac{3.25}{.025}\right)\left(\frac{V^2}{2}\right)$$

Using $V$=2.960 $m$/sec we get for $\frac{p_{min}}{\rho} = -29.92$

$$p_{min} = -(29.92)(1{,}000)(.6) = \boxed{-17{,}950 \ Pa}$$



http://ingesolucionarios.blogspot.com Edu_Zegarr_ch

http://ingesolucionarios.blogspot.com

8.43 **Find the head loss for the given pipe.**

An *equivalent length* of pipe is one whose head loss for the same value of flow is equal to that of some other system of different geometry for which it is the equivalent. Consider a steel pipe of *nominal* diameter 10 in having in it an open globe valve and four screwed 90° elbows. The length of the pipe is 100 ft, and 5 ft³/s of water at 60°F flows through the pipe. What is the equivalent length of pipe of nominal diameter 14 in?

$$h_\ell = f\left(\frac{L}{D}\right)\left(\frac{V^2}{2}\right) + \Sigma(h_\ell)_M$$

$$V = \frac{q}{A} = \frac{5}{\frac{78.86}{144}} = 9.13 \quad ft/\text{sec}$$

$$Re = \frac{VD}{\nu} = \frac{\frac{(9.13)(10.02)}{12}}{1.217\times10^{-5}} = 6.26\times10^5$$

$$\frac{e}{D} = \frac{.00015}{\frac{10.02}{12}} = .00018 \qquad f = .015$$

$$\therefore \quad h_\ell = (.015)\left(\frac{100}{\frac{10.02}{12}}\right)\left(\frac{9.13^2}{2}\right) + (4.8)\left(\frac{9.13^2}{2}\right) + (4)(.42)\left(\frac{9.13^2}{2}\right) = 344.9 \quad \frac{ft.lb}{slug}$$

Go to the **equivalent pipe**. The head loss must be 344.9 and the $q$=5 $cfs$ . We determine the length.

$$V = \frac{q}{A} = \frac{5}{\frac{132.73}{144}} = 5.42 \quad ft/\text{sec}$$

$$Re = \frac{VD}{\nu} = \frac{(5.42)\left(\frac{13}{12}\right)}{1.217\times10^{-5}} = 4.83\times10^5$$

$$\frac{e}{D} = \frac{.00015}{\frac{13}{12}} = .000138 \qquad f = .015$$

Hence we have for the equivalent pipe

$$344.9 = (.015)\left(\frac{L_{eq}}{\frac{13}{12}}\right)\left(\frac{5.42^2}{2}\right)$$

$$\boxed{L_{eq} = 1{,}696 \quad ft}$$



http://ingesolucionarios.blogspot.com Edu_Zegarr_ch

http://ingesolucionarios.blogspot.com
8.44

What is the horizontal force on the pipe system from the water flowing inside? The pipe is 300 mm in inside diameter and is new. The pump is known to be developing 65 kW of power on the water. The temperature of the water is 5°C.

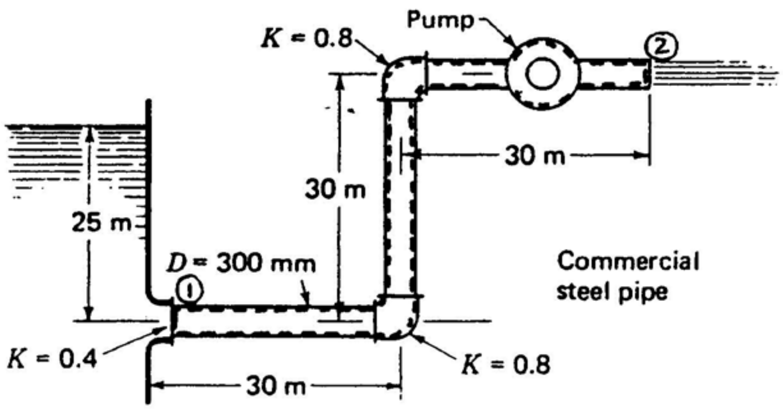


First we shall compute the flow. Use **first law** for the control volume shown. Thus using **continuity** and **gauge** pressures we have:

$$\frac{p_1}{\rho} - \frac{dW_s}{dm} = 30g + h_l \qquad \text{(a)}$$

From **Bernoulli** in the reservoir:

$$\frac{p_1}{\rho} = 25g - \frac{V^2}{2} \qquad \text{(b)}$$

Also

$$\frac{dW_s}{dm} = \left(\frac{dW_s}{dt}\right)\left(\frac{dt}{dm}\right) = \frac{-(65{,}000)}{\left[(1{,}000)(V)\frac{(\pi)(.300)^2}{4}\right]} = -\frac{(919.6)}{V} \quad N\text{-}m/kg$$

$$h_l = (f)\left(\frac{90}{.300}\right)\left(\frac{V^2}{2}\right) + 2\left(\frac{V^2}{2}\right)$$

Choose $f$=.014 . Substituting above results into Eq. (a) we get:

$$\left(25g - \frac{V^2}{2}\right) + \frac{919.6}{V} = 30g + (.014)\left(\frac{90}{.300}\right)\left(\frac{V^2}{2}\right) + V^2$$



http://ingesolucionarios.blogspot.com Edu_Zegarr_ch

http://ingesolucionarios.blogspot.com

**(cont.)**

$$3.60V^3 + 49.05V - 919.6 = 0$$

Solve by trial and error: $V = 5.63 \quad m/s$

$$Re = \frac{(1{,}000)(5.63)(.300)}{1.519\times10^{-3}} = 1.112\times10^6 \qquad f = .0141 \quad \text{good guess}$$

Now use the **linear momentum** equation in the $x$ direction. Using gauge pressures we have:

$$p_1 \frac{\pi(.300)^2}{4} + R_x = 0$$

From (b) get $p_1$. Now solve for $R_x$. $R_x = -1.6215\times10^4 \quad N$

Taking the reaction:

$$\boxed{K_x = 1.6215\times10^4 \quad N}$$


http://ingesolucionarios.blogspot.com Edu_Zegarr_ch

http://ingesolucionarios.blogspot.com

What should be the flow through the system shown. We have commercial steel pipe, 6 in in diameter.

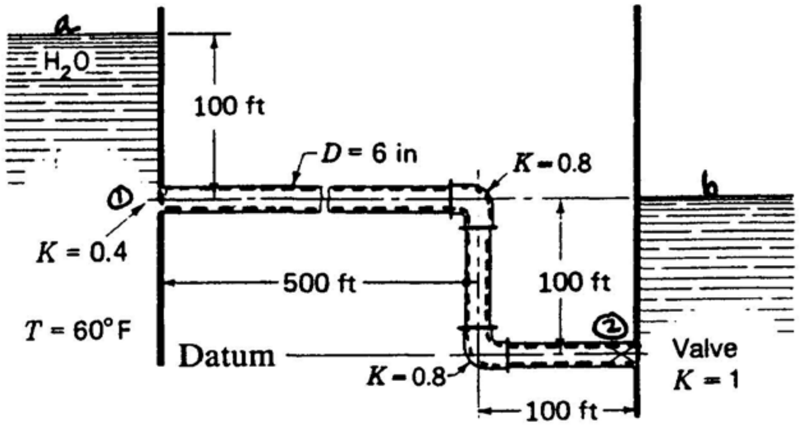


Write **first law of thermo.** for control volume shown. Noting that $V_1 = V_2$ we get for the datum shown:

$$\frac{p_1}{\rho} + 100g = \frac{p_2}{\rho} + h_{l_T} \qquad \text{(a)}$$

Use **Bernoulli**; we have for $p_1$ :

$$\frac{p_a}{\rho} + 100g = \frac{p_1}{\rho} + \frac{V^2}{2}$$

$$\therefore \quad \frac{p_1}{\rho} = \frac{p_a}{\rho} + 100g - \frac{V^2}{2} \qquad \text{(b)}$$

As for pressure $p_2$ we assume a free jet of (2) and so we get $p_2$ from **hydrostatics** as:

$$p_2 = (\gamma)(100) + p_b \qquad \text{(c)}$$

Using gauge pressure we can then rewrite Eq. (a) as follows:

$$\left(100g - \frac{V^2}{2}\right) + 100g = \frac{100\gamma}{\rho} + h_{l_T}$$

$$\therefore \quad \frac{V^2}{2} + h_{l_T} = 3{,}220 \qquad \text{(d)}$$

http://ingesolucionarios.blogspot.com

**(cont.)**

$$h_{l_T} = f\left(\frac{700}{\frac{1}{2}}\right) + (3)\left(\frac{V^2}{2}\right)$$

Hence going back to (d):

$$\frac{V^2}{2}\left[1 + f(1{,}400) + 3\right] = 3{,}220$$

Guess at $f = .015$ $\qquad V = 16.05 \ \ ft/sec$

Now compute Reynolds number. $\qquad Re = \frac{(1.938)(16.05)\left(\frac{1}{2}\right)}{2.359\times10^{-5}} = 6.59\times10^5$

$$\frac{e}{D} = .0003 \qquad \therefore \ f = .016$$

Recompute $V$ using above $f$ : $\qquad V = 15.62 \ \ sec$

$$Q = \frac{(15.62)\left(\frac{1}{4}\right)(\pi)}{4} = \boxed{3.07 \ cfs}$$



http://ingesolucionarios.blogspot.com Edu_Zegarr_ch

http://ingesolucionarios.blogspot.com

8.46

Put a pump on the line of Prob. 8.45. What is the new flow through the system if the pump develops 10 hp on water? Does it make any difference where the pump is placed with respect to mass flow?

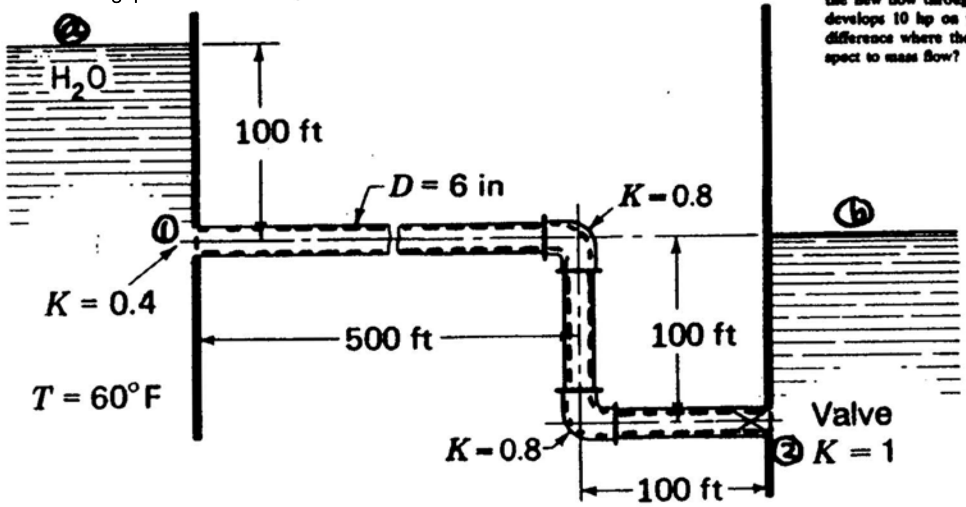


We can use Eq. (d) except that we must include $\frac{dW_s}{dm}$

$$\frac{V^2}{2} + h_{l_T} + \frac{dW_s}{dm} = 3{,}220$$

$$\frac{dW_s}{dm} = \frac{\left(\frac{dW_s}{dt}\right)}{\left(\frac{dm}{dt}\right)} = \left[\frac{-(10)(550)}{(V)\left(\frac{\rho\pi}{16}\right)}\right] = -\frac{14{,}439}{V}$$

$$\therefore \quad \frac{V^2}{2}[1 + f(1{,}400) + 3] - \frac{14{,}439}{V} = 3{,}220$$

Let $f = .016$ . We get

$$V^3 - 243.9V - 1{,}094 = 0$$

Solve by trial and error. $V = 17.50$ *ft*/sec

$$Re = \frac{(1.938)(17.50)\left(\frac{1}{2}\right)}{2.359\times10^{-5}} = 7.19\times0^5 \qquad \therefore \quad f = .016$$

We are certainly using the result $V = 17.50$ *ft*/sec here.

$$Q = (17.50)\left(\frac{\pi}{16}\right) = \boxed{3.44\ cfs}$$


http://ingesolucionarios.blogspot.com Edu_Zegarr_ch

http://ingesolucionarios.blogspot.com

How much water flows from the reservoir through the pipe system? The water drives a water turbine which develops 100 hp. Take $\mu = 2.11 \times 10^{-5}$ lb·s/ft².

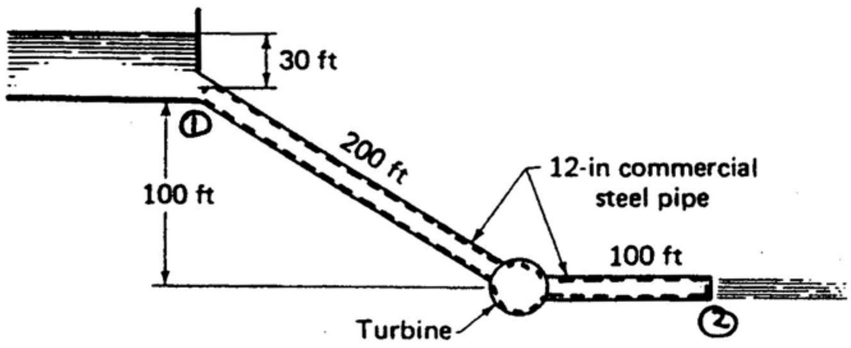


Use **first law of thermodynamics** for the control volume shown using gauge pressures and noting that $V_1 = V_2$ .

$$\frac{p_1}{\rho} + 100g - \frac{dW_s}{dm} = (h_l)_T$$

Note that:

$$\frac{dW_s}{dm} = \frac{\frac{dW_s}{dt}}{\frac{dm}{dt}} = \frac{(100)(550)}{1.938V\left(\frac{\pi}{4}\right)} = \frac{36.1\times10^3}{V}$$

$$(h_l)_T = f\left(\frac{300}{1}\right)\left(\frac{V^2}{2}\right) = f(150)V^2$$

From **Bernoulli**:
$$\frac{p_1}{\rho} = 30g - \frac{V^2}{2}$$

Hence:
$$\left(30g - \frac{V^2}{2}\right) + 100g - \frac{36.1\times10^3}{V} = (f)(150)V^2$$


http://ingesolucionarios.blogspot.com Edu_Zegarr_ch

http://ingesolucionarios.blogspot.com

**(cont.)**

This becomes: $$V^3\left[\frac{1}{2}+f(150)\right]-4{,}186V=-36.1\times10^3 \qquad \text{(a)}$$

Let $f$=.015 $$V^3-1{,}520V=-13.13\times10^3$$

Solve by trial and error to get $V=9.15 \;\; ft/sec$

$$Re=\frac{(1.938)(9.15)(1)}{2.11\times10^{-5}}=8.40\times10^5 \qquad \therefore \;\; f=.014$$

Go back to Eq. (a). It now becomes:

$$V^3-1{,}583V=-13.68\times10^3$$

By trial and error we now get for $V$ :

$$V=9.12 \;\; ft/sec$$

$$q=9.12\left(\frac{\pi}{4}\right)= \boxed{7.16 \;\; cfs}$$

 http://ingesolucionarios.blogspot.com

In Prob. 8.47 determine the diameter of a commercial steel pipe which will transport 50 $ft^3/s$ of water while developing 100 hp in the water turbine.

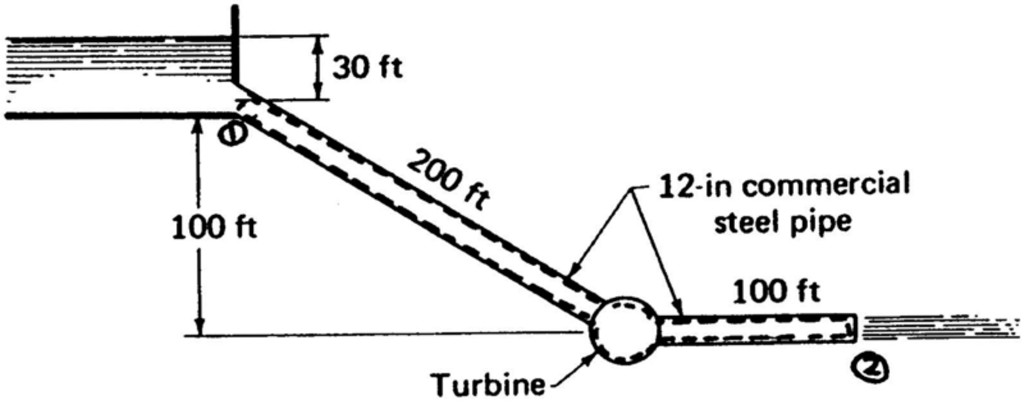


We use C.V. in the diagram of previous problem. The **first law** states

$$\frac{p_1}{\rho} + 100g - \frac{dW_s}{dm} = h_\ell \qquad \text{(a)}$$

Note
$$\frac{dW_s}{dm} = \frac{(55{,}000)}{[(50)(1.938)]} = 567.6 \ \frac{ft.lb.}{slug}$$

$$h_\ell = f\left(\frac{300}{D}\right)\left(\frac{V^2}{2}\right) = f\left(\frac{150}{D}\right)\left[\frac{50}{\frac{\pi D^2}{4}}\right]^2 = \frac{(f)(6.08\times10^5)}{D^5}$$

Using **Bernoulli**:

$$\frac{p_1}{\rho} = 30g - \left[\frac{50}{\frac{\pi D^2}{4}}\right]^2\left(\frac{1}{2}\right) = 30g - \frac{2{,}026}{D^4}$$

Substituting into Eq. (a) we get:

$$30g - \frac{2{,}026}{D^4} + 100g - 567.6 = f\,\frac{6.08\times10^5}{D^5}$$

This becomes:

$$3{,}618D^5 - 2{,}026D = f(6.08\times10^5) \qquad \text{(b)}$$

http://ingesolucionarios.blogspot.com 

http://ingesolucionarios.blogspot.com

8.49 System is in equilibrium. Hence

Show that the shear stress at the wall of a pipe for fully developed flow is given as

$$\tau_w = \left(\frac{p_1 - p_2}{L_{1-2}}\right)\left(\frac{D}{4}\right)$$

Then using the definition of the friction factor $f$ show that

$$\tau_w = \frac{1}{8} f \rho \bar{V}^2_{mean}$$

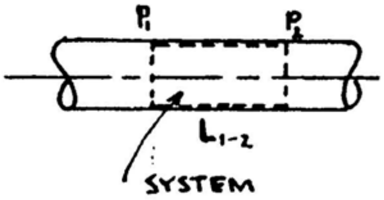


$$(p_1 - p_2)\left(\frac{\pi D^2}{4}\right) - \tau_W(\pi D)(L_{1-2}) = 0$$

$$\therefore \quad \tau_W = \left(\frac{p_1 - p_2}{L_{1-2}}\right)\left(\frac{D}{4}\right) \qquad (1)$$

Also,

$$h_\ell = \frac{p_1 - p_2}{\rho} = f\left(\frac{L_{1-2}}{D}\right)\left(\frac{V^2_{mean}}{2}\right) \qquad (2)$$

Replace $\left(\dfrac{p_1 - p_2}{L_{1-2}}\right)$ in (1) using (2).

$$\tau_W = f\left(\frac{\bar{V}^2_{mean}}{2}\right)\left(\frac{\rho}{4}\right) = \frac{1}{8} f \bar{V}^2_{mean} \rho$$

8.50 Start with:

Show that for the power law

$$\frac{\bar{V}}{\bar{V}_{max}} = \left(\frac{y}{R}\right)^{1/n}$$

that the ratio of average mean time velocity to $\bar{V}_{max}$ over the cross section is given as

$$\frac{\bar{V}_{mean}}{\bar{V}_{max}} = \frac{2n^2}{(n+1)(2n+1)}$$

Note that $\bar{V}_{mean} = Q/A$ and that $y$ is measured from the wall.

$$\bar{V} = \bar{V}_{max}\left(\frac{y}{R}\right)^{\frac{1}{n}}$$

Take the mean.

$$\therefore \quad \bar{V}_{mean} = \frac{Q}{A} = \frac{\bar{V}_{max}\int_0^R \left(\frac{y}{R}\right)^{\frac{1}{n}} 2\pi(R-y)\,dy}{\pi R^2}$$

$$= \frac{2\bar{V}_{max}}{R^2 R^{\frac{1}{n}}}\left[\frac{y^{\frac{1}{n}+1} R}{\frac{1}{n}+1}\Bigg|_0^R - \frac{y^{\frac{1}{n}+2}}{\frac{1}{n}+2}\Bigg|_0^R\right] = \frac{2\bar{V}_{max}}{R^{\frac{1}{n}+2}}\left[\frac{R^{\frac{1}{n}+2}}{\frac{n+1}{n}} - \frac{R^{\frac{1}{n}+2}}{\frac{1+2n}{n}}\right]$$

$$= \bar{V}_{max}(2n)\left[\frac{1}{n+1} - \frac{1}{1+2n}\right] = \bar{V}_{max}(2n)\left[\frac{(1+2n)-(n+1)}{(n+1)(1+2n)}\right]$$

$$= \bar{V}_{max}\left(\frac{2n^2}{(n+1)(2n+1)}\right) \qquad \therefore \quad \boxed{\frac{\bar{V}_{mean}}{\bar{V}_{max}} = \frac{2n^2}{(n+1)(2n+1)}}$$



http://ingesolucionarios.blogspot.com Edu_Zegarr_ch

http://ingesolucionarios.blogspot.com

**(cont.)**

Neglect the velocity head, $2{,}026D$ , and let $f$=.015 . We get for $D$ :

$$D = \left[\frac{(.015)(6.08)(10^5)}{3{,}618}\right]^{\frac{1}{5}} = 1.203 \quad ft$$

Hence:
$$V = \frac{50}{\frac{(\pi)(1.203)^2}{4}} = 44.0 \quad ft/\text{sec}$$

$$Re = \frac{(1.938)(44.0)(1.203)}{2.11\times10^{-5}} = 4.86\times10^6 \qquad \therefore \ f = .0122$$

We now go back to Eq. (b) and use larger diameters than 1.023 for a trial and error solution. Thus:

$$3{,}618D^5 - 2{,}026D = 7.417\times10^3$$

$$D = 1.223 \quad ft$$



http://ingesolucionarios.blogspot.com Edu_Zegarr_ch

http://ingesolucionarios.blogspot.com

Oil having a specific gravity of 0.7 flows at the rate of 0.05 $m^3/h$ Compute the viscosity of the oil. Do this problem two ways:
(1) Assume laminar flow.
(2) Assume turbulent flow.
*Procedure:* First find $h_l$ from *modified Bernoulli* valid for either case. Now using the head loss, compute $\mu$ from the pipe head loss formula for laminar flow. Check Re to justify assumption (1). Next use *Darcy-Weisbach* to get $f$ for turbulent flow and use Moody to get Re and then $\mu$. Compare with $\mu$ from laminar flow.
Note we have the possibility of *two-valid solutions here*. What can you conclude about the flows close to Re ≈ 2300?

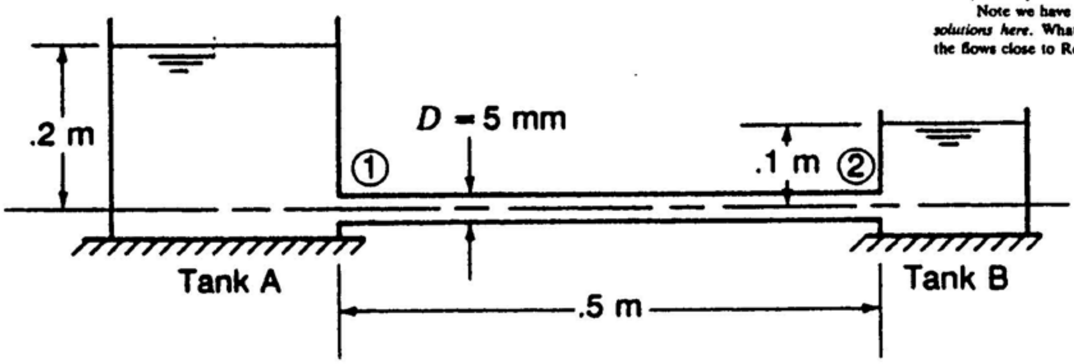


We start with the **modified Bernoulli equation**

$$\frac{V_1^2}{2} + \frac{p_1}{\rho} + 0 = \frac{V_2^2}{2} + \frac{p_2}{\rho} + 0 + h_l \tag{1}$$

$$V_1 = V_2 = \frac{\frac{.05}{3,600}}{\left(\frac{\pi}{4}\right)(.005)^2} = .7074 \ m/s$$

**Bernoulli in tank A.** Use gauge pressures:

$$.2g = \frac{V_1^2}{2} + \frac{p_1}{\rho}$$

$$\therefore \quad p_1 = (700)(.2)(9.81) - \frac{(.7074)^2}{2}(700) = 1,198 \ Pa$$

**Hydrostatics in tank B at jet**

$$p_2 = (\gamma)(h) = (700)(g)(.1) = 686.7 \ Pa \ gauge$$

Go to Eq. (1). Solve for $h_l$

$$\frac{1,198}{700} = \frac{686.7}{700} + h_l$$

$$h_l = .731 \ \frac{Pa\, m^3}{kg}$$

http://ingesolucionarios.blogspot.com

**(cont.)**

Now assume **laminar flow** in tube.

$$h_\ell = .731 = \frac{128\mu Lq}{\pi\rho D^4} = \frac{(128)(\mu)(.5)\left(\frac{.05}{3{,}600}\right)}{(\pi)(700)(.005)^4}$$

$$\therefore \quad \boxed{\mu = 1.130\times10^{-3} \quad N\text{-}s/m^2}$$

Next compute Reynolds number to check the assumption

$$Re = \frac{\rho VD}{\mu} = \frac{(700)(.7074)(.0050)}{.001130} = 2{,}191$$

∴ Laminar assumption confirmed.

**Assume turbulent** flow for **smooth** tube. Start with Darcy-Weisbach formula.

$$h_\ell = f\left(\frac{L}{D}\right)\left(\frac{V^2}{2}\right)$$

$$.731 = f\left(\frac{.5}{.005}\right)\left(\frac{.7074^2}{2}\right)$$

$$f = .02922$$

Go to **Moody**. We now get for turbulent flow

$$Re = 1.3\times10^4 = 13{,}000$$

$$\therefore \quad 13{,}000 = \frac{(700)(.7074)(.005)}{\mu}$$

$$\boxed{\mu = 1.905\times10^{-4} \quad \frac{N\text{-}s}{m^2}}$$

Hence we cannot trust Moody near $Re = 2{,}300$ .

In a turbulent flow for a Reynolds number of 5000, at what radius is the velocity no smaller than 90% of the mean velocity. Use $n = 7$ for the velocity profile.

$$V_{mean} = \frac{q}{\left(\frac{\pi}{4}\right)D^2}$$

For $\frac{1}{7}$ law:

$$V = V_{\max}\left(\frac{y}{\frac{D}{2}}\right)^{\frac{1}{7}}$$

Let $$V = .9V_{mean} = \frac{.9q}{\left(\frac{\pi}{D}\right)D^2}$$

$$\therefore \quad \frac{.9q}{\left(\frac{\pi}{4}\right)D^2} = V_{\max}\left(\frac{y}{\frac{D}{2}}\right)^{\frac{1}{7}} \tag{1}$$

Examine $q$.

$$q = \int_0^{\frac{D}{2}} V_{\max}\left(\frac{y}{\frac{D}{2}}\right)^{\frac{1}{7}} 2\pi\, y\, dy = \frac{V_{\max}}{\left(\frac{D}{2}\right)^{\frac{1}{7}}}(2\pi)\int_0^{\frac{D}{2}} y^{\frac{8}{7}} dy = \frac{V_{\max}}{\left(\frac{D}{2}\right)^{\frac{1}{7}}}(2\pi)\, \frac{y^{\frac{15}{7}}}{\frac{15}{7}}\Bigg|_0^{\frac{D}{2}}$$

$$= \frac{V_{\max}}{\left(\frac{D}{2}\right)^{\frac{1}{7}}}(2\pi)\frac{\left(\frac{D}{2}\right)^{\frac{15}{7}}}{\frac{15}{7}} = V_{\max}\left(\frac{D}{2}\right)^2\left(\frac{2\pi}{15}\right)(7) \tag{2}$$

Go back to Eq. (1). Subst. (2).

$$\frac{.9}{\pi\left(\frac{D}{2}\right)^2}(V_{\max})\left(\frac{D}{2}\right)^2\left(\frac{14\pi}{15}\right) = V_{\max}\left(\frac{y}{\frac{D}{2}}\right)^{\frac{1}{7}} \quad \left\{y = \left[(9)\left(\frac{14}{15}\right)\right]^7\left(\frac{D}{2}\right) = (.295)\left(\frac{D}{2}\right)\right\}$$

$$\therefore \quad \boxed{r_{.90} = (.295)\left(\frac{D}{2}\right) = .1475D}$$



http://ingesolucionarios.blogspot.com Edu_Zegarr_ch

http://ingesolucionarios.blogspot.com

8.53

For $D_1 = 200$ mm and $D_2 = 100$ mm what angle $\theta$ gives the largest head loss for the reducing member. What is the head loss for $V_1 = 3$ m/s?

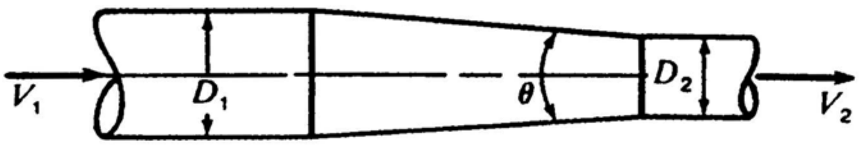


For $\theta \le 45°$
$$K = \frac{.8 \sin\frac{\theta}{2}\left[1-\left(\frac{D_2}{D_1}\right)^2\right]}{\left(\frac{D_2}{D_1}\right)^4}$$

$$\frac{D_2}{D_1} = .5 \qquad \therefore \quad K = \frac{.8 \sin\frac{\theta}{2}(.75)}{(.5)^4}$$

$$(K_{max})_1 \text{ occurs at } \frac{\theta_1}{2} = 22.5° \qquad \therefore \quad \theta_1 = .45°$$

$$(K_{max})_1 = \frac{(.8)(.3827)(.75)}{(.5)^4} = 3.67$$

For $\theta > 45°$
$$K = \frac{(.5)\left[1-\left(\frac{D_2}{D_1}\right)^2\right]\sqrt{\sin\frac{\theta}{2}}}{\left(\frac{D_2}{D_1}\right)^4}$$

$$\therefore \quad (K_{max})_2 \text{ occurs when } \frac{\theta}{2} = 90° \qquad \theta = 180°$$

$$(K_{max})_2 = \frac{.5[1-(.5)^2]\sqrt{1}}{(.5)^4} = 6$$

$$\therefore \quad \boxed{K_{max} = 6}$$

$$h_\ell = K\frac{V_1^2}{2} = (6)\left(\frac{9}{2}\right) = 27 \quad Pa/kg$$

http://ingesolucionarios.blogspot.com

8.54

For the diffuser, what is the head loss with $D_1 = 12$ in and $D_2 = 18$ in for $V_1 = 5$ ft/s? The length of the diffuser is 5 ft. Explain the opposing roles of skin friction and separation in developing this head loss. Water at 60°F is flowing.

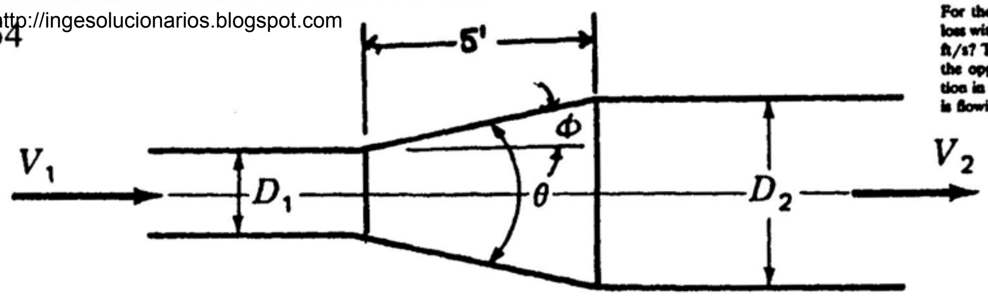


If $\theta \le 45°$, $K = \dfrac{2.6 \sin(\theta/2)\left[1-(D_1/D_2)^2\right]^2}{(D_1/D_2)^4}$

If $45° < \theta \le 180°$, $K = \dfrac{\left[1-(D_1/D_2)^2\right]^2}{(D_1/D_2)^4}$

$$h_l = K\frac{V_2^2}{2}$$

$$\tan\phi = \frac{9-6}{(5)(12)} = .05 \qquad \therefore \quad \phi = 2.86°$$

$$\theta = (2)(2.86) = 5.725°$$

$$K = \frac{2.6\sin\left(\frac{5.725}{2}\right)\left[1-\left(\frac{12}{18}\right)^2\right]^2}{\left(\frac{12}{18}\right)^4} = .2029$$

$$h_l = \frac{(.2029)\left[\left(\frac{12}{18}\right)^4 (5)^2\right]}{2} = .5009\ \frac{ft\text{-}lb}{slug}$$

The longer the diffuser for a given $\theta$ the greater the skin friction loss and so to increase $h_l$. But separation will be less then, so as to decrease $h_l$. The effects oppose each other.

 http://ingesolucionarios.blogspot.com

Determine the flow $Q$. Use text for minor loss coefficients.

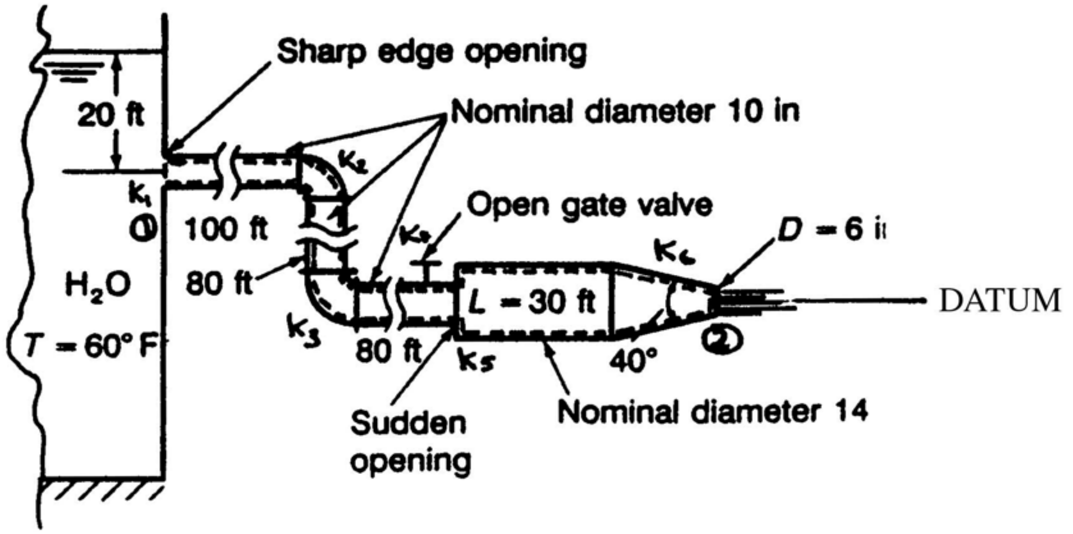


For 90° elbows $r/d = 3$
Pipes are all commercial steel

**DATA** Pipe Diameters $\begin{cases} 10'' \; Nominal = 10.02'' \\ 14'' \; Nominal = 13.00'' \end{cases}$

$K_1 = .5$

$K_2 = .168$

$K_3 = .168$

$K_4 = .11$

$$K_5 = \frac{\left[1 - \left(\frac{10.02}{13.00}\right)^2\right]^2}{\left(\frac{10.02}{13.00}\right)^4} = .467$$

$$K_6 = \frac{.8\left[1 - \left(\frac{6}{13}\right)^2\right]\sqrt{\sin 20°}}{\left(\frac{6}{13}\right)^4} = 8.114$$

**First Law** (gauge pressures)

$$\frac{V_1^2}{2} + 80g + \frac{p_1}{\rho} = \frac{V_2^2}{2} + 0 + 0 + h_\ell + (h_\ell)_M \tag{1}$$

**Bernoulli** in tank.

http://ingesolucionarios.blogspot.com
(cont.)

$$\frac{V_a^2}{2} + 20g + 0 = \frac{V_1^2}{2} + 0 + \frac{p_1}{\rho}$$

$$\frac{p_1}{\rho} = 20g - \frac{V_1^2}{2} \qquad (2)$$

**Continuity** for C.V.

$$\rho V_1 A_1 = \rho V_2 A_2$$

or $$V_2 = 2.79 V_1$$

Go back to First Law. Subst. into Eq. (1).

$$V_1 = \frac{6^2}{10.02^2} V_2 = .359\, V_2 \qquad (3)$$

$$\frac{V_1^2}{2} + 80g + \left(20g - \frac{V_1^2}{2}\right) = \frac{(2.79V_1)^2}{2} + f_1\left[\frac{260}{\left(\frac{10.02}{12}\right)}\right]\left(\frac{V_1^2}{2}\right) + f_2\left[\frac{30}{\left(\frac{13}{12}\right)}\right]\frac{\left(\frac{10.02}{13}\right)^4 V_1^2}{2}$$

$$+ (.5+.168+.168+.11)\left(\frac{V_1^2}{2}\right) + (.467)\frac{\left[\left(\frac{10.02}{13}\right)^2 V_1\right]^2}{2} + (8.114)\frac{\left[\left(\frac{10.02}{13}\right)^2 V_1\right]^2}{2} \qquad (4)$$

$$\begin{cases} \left(\dfrac{e}{D}\right)_{10''} = \left(\dfrac{.00015}{\frac{10.02}{12}}\right) = 1.796\times10^{-4} = .0001796 \\ \left(\dfrac{e}{D}\right)_{14''} = \left(\dfrac{.00015}{\frac{13}{12}}\right) = 1.385\times10^{-4} = .0001385 \end{cases}$$

Let $\begin{cases} f_1 = .014 \\ f_2 = .013 \end{cases}$


http://ingesolucionarios.blogspot.com Edu_Zegarr_ch

http://ingesolucionarios.blogspot.com
(con.)

$\therefore$ From (4) we have:

$$3{,}220 = 3.89V_1^2 + 2.180V_1^2 + .0635V_1^2 + .4730V_1^2 + .08241V_1^2 + 1.432V_1^2 = 8.12V_1^2$$

$$V_1 = 19.91 \ ft/s$$

$$(Re)_{10''} = \frac{(19.91)\left(\frac{10.02}{12}\right)}{1.217\times10^{-5}} = 1.366\times10^6$$

$$(Re)_{14''} = \frac{\left(\frac{10.02}{13}\right)^2(19.91)\left(\frac{13}{12}\right)}{1.217\times10^{-5}} = 1.053\times10^6$$

New $f$'s :

$$f_1 = .0145$$

$$f_2 = .014$$

Go back to (4) using latest $f$'s . Solve for $V_1$ .

$$3{,}220 = 3.89V_1^2 + 2.257V_1^2 + .06842V_1^2 + .4730V_1^2 + .08241V_1^2 + 1.432V_1^2$$

$$V_1 = 19.81 \ ft/s$$

$$Q = \frac{(\pi)(10.02)^2}{(4)(144)}(19.81) = \boxed{10.85 \ cfs}$$

http://ingesolucionarios.blogspot.com

8.56

For a volume flow from *A* to *B* of 5 ft³/s determine the power input to the flow of the pump. Note that we have given *nominal* diameters. Use text to determine all minor loss coefficients. Temperature is 60°F.

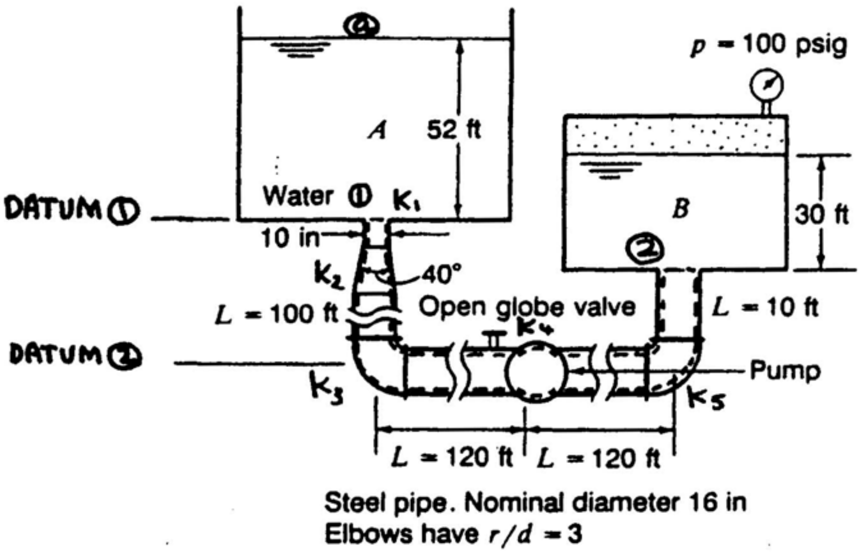


**Minor Loss Coef.**

$K_1 = .78$

$$K_2 = \frac{\left[1 - \left(\frac{10}{15.25}\right)^2\right]^2}{\left(\frac{10}{15.25}\right)^4}(2.6\sin 20°) = 1.563$$

$K_3 = K_5 = .156$

$K_4 = 4.4$

**First Law** (Datum 2)

$$\ell = \frac{\frac{15.25 - 10}{2}}{\tan 20°}$$

$\ell = 7.21\ ft$

$$\frac{V_1^2}{2} + \frac{p_1}{\rho} + (107.2)(g) = \frac{V_2^2}{2} + \frac{p_2}{\rho} + 10g + \frac{dW_s}{dm} + h_\ell + (h_\ell)_M \qquad (1)$$

**Bernoulli** in Tank A. Use gauge pressures (Datum 1).

$$\frac{V_a^2}{2} + 52g + 0 = \frac{p_1}{\rho} + \frac{V_1^2}{2} + 0$$



http://ingesolucionarios.blogspot.com Edu_Zegarr_ch

http://ingesolucionarios.blogspot.com

(cont.)

$$\frac{p_1}{\rho} = (52)(32.2) - \frac{1}{2}\left[\frac{5}{\left(\frac{\pi}{4}\right)\left(\frac{10}{12}\right)^2}\right]^2 = 1{,}632\ \frac{ft\text{-}lb}{slug}$$

$$V_2 = \frac{5}{\left(\frac{\pi}{4}\right)\left(\frac{15.25}{12}\right)^2} = 3.94\ ft/sec$$

**Hydrostatics in Tank B**

$$\frac{p_2}{\rho} = \frac{[(30)(62.4) + (100)(144)]}{1.938} = 8{,}396\ \frac{ft\text{-}lb}{slug}$$

**Head Loss**

$$Re = \frac{VD}{\nu} = \frac{(3.94)\left(\frac{15.25}{12}\right)}{1.217\times10^{-5}} = 4.114\times10^5$$

$$e = .00015\ ft \qquad \frac{e}{D} = \frac{.00015}{\left(\frac{15.25}{12}\right)} = 1.18\times10^{-4} = .000118$$

$$f = .015$$

$$h_l = (.015)\left(\frac{350}{\frac{15.25}{12}}\right)\left(\frac{3.94^2}{2}\right) = 32.065\ \frac{ft\text{-}lb}{slug}$$

∴

$$(h_l)_M = \Sigma K\frac{V^2}{2} = [.78+1.563+(2)(.156)+4.4]\ \frac{3.94^2}{2} = 54.76\ \frac{ft\text{-}lb}{slug}$$

Go to Eq. (1)

$$\frac{1}{2}\left[\frac{5}{\left(\frac{\pi}{4}\right)\left(\frac{10}{12}\right)^2}\right]^2 + 1{,}632 + 3{,}452 = \frac{3.94^2}{2} + 8{,}396 + 322 + \frac{dW_s}{dm} + 32.065 + 54.76$$

$$\frac{dW_s}{dm} = -3{,}687\ \frac{ft\text{-}lb}{slug} \qquad \frac{dW_s}{dt} = -(3{,}687)(5)(1.938) = -35{,}727\ \frac{ft\text{-}lb}{sec}$$

**Power = 64.96 HP**

 http://ingesolucionarios.blogspot.com

A flow $q$ of 170 L/s is to go from tank $A$ to tank $B$. If $\nu = 0.113 \times 10^{-5}$ m²/s, what should the diameter be for the horizontal section of pipe?

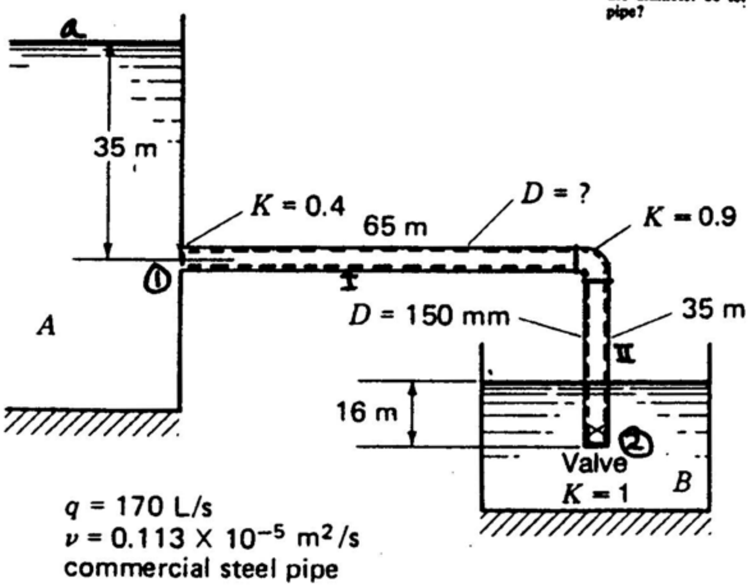


$$V_2 = \frac{.170}{\left(\frac{\pi}{4}\right)(.150^2)} = 9.62 \quad m/sec$$

**First Law:**

$$\frac{V_1^2}{2} + \frac{p_1}{\rho} + gz_1 = \frac{V_2^2}{2} + \frac{p_2}{\rho} + gz_2 + (h_\ell)_I + (h_\ell)_{II} + (h_\ell)_M$$

Use **Bernoulli** at (1) and **hydrostatics** at (2).

$$\frac{V_1^2}{2} + \left(35g - \frac{V_1^2}{2}\right) + 35g = \frac{V_2^2}{2} + \frac{(16)(9{,}806)}{1{,}000} + (h_\ell)_I + (h_\ell)_{II} + (h_\ell)_M \qquad \text{(a)}$$

$$(h_\ell)_I = f_I\left(\frac{65}{D_I}\right)\left(\frac{V_1^2}{2}\right) = f_I\left(\frac{65}{D_1}\right)\left(\frac{\frac{170}{1{,}000}}{\frac{\pi D_I^2}{4}}\right)^2\left(\frac{1}{2}\right) = \frac{1.523}{D_1^5}\, f_I$$

$$(h_\ell)_{II} = f_{II}\left(\frac{35}{.150}\right)\left(\frac{9.62^2}{2}\right) = 10{,}800 f_{II}$$

$$\therefore \quad 70g = 46.3 + 156.9 + \frac{1.523}{D_I^5} f_I + 10{,}800 f_{II} + (2.3)\left(\frac{.170}{\frac{\pi}{4} D_I^2}\right)^2\left(\frac{1}{2}\right) \qquad \text{(b)}$$



http://ingesolucionarios.blogspot.com Edu_Zegarr_ch

http://ingesolucionarios.blogspot.com

**(cont.)**

$$(Re)_{II} = \frac{(9.62)(.150)}{.113\times10^{-5}} = 1.277\times10^{6} \qquad f_{II} = .0154$$

Going back to Eq. (b) we have : $317 = f_I \dfrac{1.523}{D_1^5} + \dfrac{.0539}{D_1^4}$

Let $f_I = .015$ $\quad \dfrac{.0228}{D_I^5} + \dfrac{.0539}{D_I^4} - 317 = 0$

$$13{,}903 D_I^5 - 2.36 D_I - 1 = 0 \qquad \text{(c)}$$

**Neglect second term:** $D_I = .1484 \quad m$

$$V_I = \frac{.170}{\dfrac{\pi(.1484)^2}{4}} = 9.83 \quad m/sec$$

$$(Re)_I = \frac{(9.83)(.1484)}{.113\times10^{-5}} = 1.291\times10^{6} \qquad \therefore \; f_I = .0152$$

No need to iterate. Go back to (c). By trial and error, we find:

$D_I = .1619 \ m =$ **161.9 mm**

http://ingesolucionarios.blogspot.com

If $p_1$ = 200 lb/in² gage, what should the inside pipe diameter be to transport 12 ft³/s of water? Neglect minor losses.

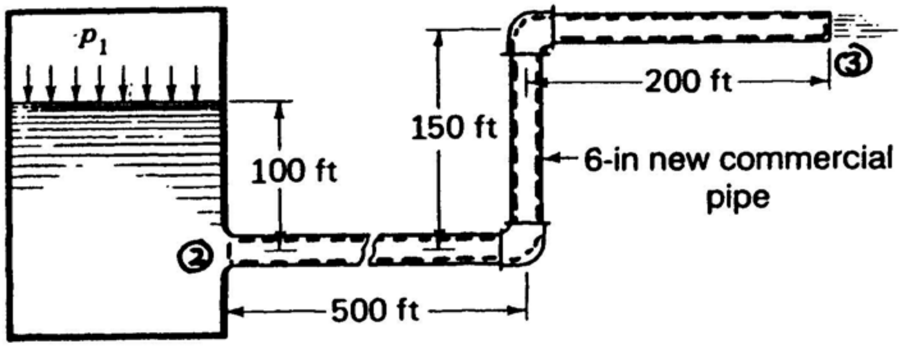


Consider **first law of thermodynamics** for interior of pipe. Use gauge pressures.

$$\frac{p_2}{\rho} + \frac{V^2}{2} + 0 = \frac{p_3}{\rho} + \frac{V^2}{2} + 150g + h_l \qquad \text{(a)}$$

Now use **Bernoulli** in tank.

$$\frac{(200)(144)}{1.94} + (100)(32.2) = \frac{V^2}{2} + \frac{p_2}{\rho}$$

$$\frac{p_2}{\rho} = 1.807\times10^4 - \frac{V^2}{2} \qquad \text{(b)}$$

Note also

$$V = \frac{Q}{A} = \frac{12}{\pi\left(\frac{D^2}{4}\right)} = \frac{15.28}{D^2} \qquad \text{(c)}$$

Going back to (a):

$$\left[1.807\times10^4 - \frac{15.28^2}{2D^4}\right] = (150)(32.2) + f\left(\frac{850}{D}\right)\left(\frac{15.28^2}{2D^4}\right) \qquad \text{(d)}$$

This becomes on letting $f$=.015 :

$$13{,}240D^5 - 116.7D - 1{,}488 = 0 \qquad \text{(e)}$$


http://ingesolucionarios.blogspot.com Edu_Zegarr_ch

http://ingesolucionarios.blogspot.com

**(cont.)**

Neglect now the second term. We get

$$D = .646 \quad ft = 7.75 \quad in.$$

Check $f$ .

$$V = \frac{12}{\frac{(\pi)}{4}(.646)^2} = 36.6 \quad ft/\sec$$

$$Re = \frac{(36.6)(.646)}{2.11\times10^{-5}} = 1.121\times10^6 \qquad f = .0149$$

Now go back to Eq. (e) and rewrite using new $f$ .

$$13{,}240D^5 - 116.7D - 1{,}479 = 0 \qquad \text{(f)}$$

Using values of $D$ close to .646 solve the above equation by trial and error.

$$D = .651 \quad ft = 7.812 \quad in.$$

$$\therefore \quad D = 7.81 \quad in.$$



http://ingesolucionarios.blogspot.com Edu_Zegarr_ch

We found that for a flow of 100 L/s we needed a pressure $p_1$ of $2.61 \times 10^3$ kPa gage. With this pressure $p_1$, and the given pressure on the device $B$, what size pipe is needed to double the flow?

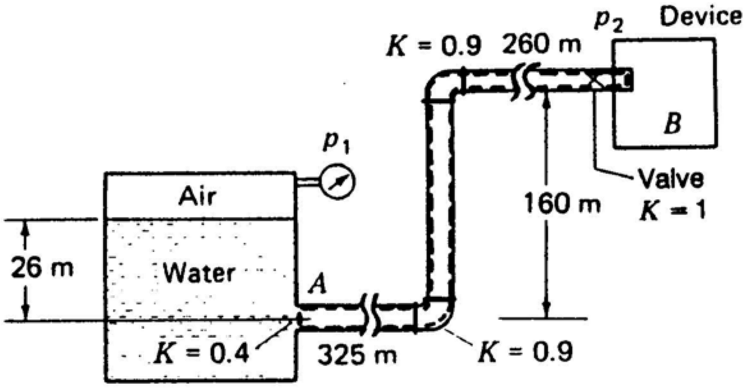


**First Law** for interior of pipe.

$$\frac{p_A}{\rho} + \frac{V^2}{2} + 0 = \frac{p_B}{\rho} + \frac{V^2}{2} + 160g + h_l + (h_l)_M \qquad \text{(a)}$$

User **Bernoulli** between free surface and $A$ .

$$26g + \frac{2.69\times10^6}{1,000} = \frac{p_A}{\rho} + \frac{V^2}{2}$$

$$\therefore \quad \frac{p_A}{\rho} = 2,945 - \frac{V^2}{2} \qquad \text{(b)}$$

Going back to Eq. (a).

$$\left(2,945 - \frac{V^2}{2}\right) = \frac{40\times10^3}{1,000} + 160g + f\left(\frac{745}{D}\right)\left(\frac{V^2}{2}\right) + 3.2\,\frac{V^2}{2}$$

But

$$V = \frac{\frac{200}{1,000}}{\frac{\pi}{4}D^2} = \frac{.2546}{D^2}$$

Hence:

http://ingesolucionarios.blogspot.com
**(cont.)**

$$2{,}945 - \frac{.03241}{D^4} = \frac{40\times10^3}{1{,}000} + 160g + f\left(\frac{24.15}{D^5}\right) + \frac{.1037}{D^4} \qquad \text{(c)}$$

Let $f$=.015 . Then:

$$1{,}335D^5 - .1361D - .3623 = 0$$

Neglect middle term.

$$D = .1935\ m = 193.5\ mm$$

Check $f$ .

$$V = \frac{.2546}{.1935^2} = 6.80\ m/s$$

$$Re = \frac{(6.80)(.1935)}{.113\times10^{-5}} = 1.164\times10^6$$

$$\therefore\quad f = .0153$$

Eq. (c) now becomes

$$1{,}335D^5 - .1361D - .3695 = 0$$

Now solve by trial and error using values a littler larger than .1935 . We get

$$D = .1970\ m = 197.0\ mm$$


http://ingesolucionarios.blogspot.com Edu_Zegarr_ch

http://ingesolucionarios.blogspot.com

8.60

Choose the inside diameter of the pipe such that the horizontal thrust on the pipe from the water does not exceed the value of 30 kN. The water is at 5°C. Neglect minor losses.

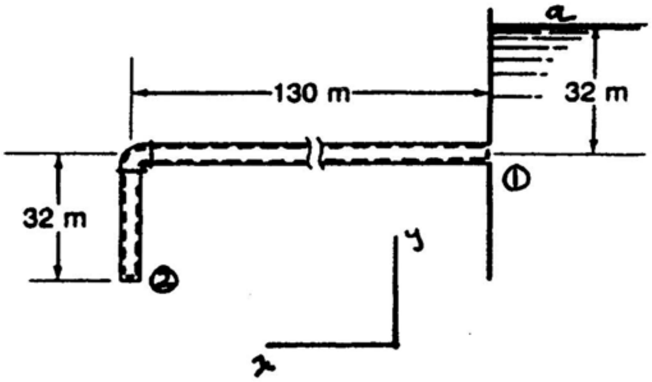


Consider valve to be wide open for maximum flow. We express the **linear momentum equation**

$$-30{,}000 + (p_1)\left(\frac{\pi D^2}{4}\right) = -(1{,}000)(V^2)\left(\frac{\pi D^2}{4}\right) \qquad (1)$$

Now use **Bernoulli** between (a) and (1) in tank. Use gauge pressures.

$$\frac{p_1}{\rho} = (9.81)(32) - \frac{V^2}{2} \qquad (2)$$

Next use **first law of thermodynamics** for control volume.

$$\frac{p_1}{\rho} + \frac{V^2}{2} + (32)(g) = \frac{V^2}{2} + 0 + 0 + h_l \qquad (3)$$

Substitute for $p_1/\rho$ using Eq. (2).

$$\left[(9.81)(32) - \frac{V^2}{2}\right] + (32)(9.81) = f\left(\frac{162}{D}\right)\left(\frac{V^2}{2}\right) \qquad (4)$$

Now substitute for $p_1/\rho$ in Eq. (1) using Eq. (2). We get:

$$-30{,}000 + \frac{\pi D^2}{4}(\rho)\left[(9.81)(32) - \frac{V^2}{2}\right] = -1{,}000V^2\left(\frac{\pi D^2}{4}\right) \qquad (5)$$

Now estimate a value of $f$ to be .013 and solve for $D$ in Eq. (4).

$$\left[628 - \frac{V^2}{2}\right] = 1.053\,\frac{V^2}{D}$$



http://ingesolucionarios.blogspot.com Edu_Zegarr_ch

http://ingesolucionarios.blogspot.com

**(cont.)**

$$D = \frac{(81)(f)(V^2)}{\left[628 - \frac{V^2}{2}\right]} = \frac{1.053V^2}{\left(628 - \frac{V^2}{2}\right)} \qquad (6)$$

Substitute into Eq. (5) for $D$ .

$$-30{,}000 + 785\left[\frac{1.053V^2}{628 - \frac{V^2}{2}}\right]^2\left(313.9 - \frac{V^2}{2}\right) = -785V^2\left[\frac{1.053V^2}{638 - \frac{V^2}{2}}\right]^2$$

Rearrange the equation

$$-30{,}000 + 785\left[\frac{1.053V^2}{628 - \frac{V^2}{2}}\right]^2\left(313.9 - \frac{V^2}{2} + V^2\right) = 0$$

$$\therefore \quad \left[\frac{1.053V^2}{638 - \frac{V^2}{2}}\right]^2\left(313.9 + \frac{V^2}{2}\right) = 38.2$$

Solve by trial and error. $\qquad V = 12.71$

From Eq. (6) we get for $D$ : $\qquad D = .311\ m = 311\ mm$

Now check on $f$ .

$$Re = \frac{(.311)(12.71)}{1.519\times10^{-6}} = 2.60\times10^6 \qquad f = .0132$$

We are close enough.



http://ingesolucionarios.blogspot.com Edu_Zegarr_ch

http://ingesolucionarios.blogspot.com

8.61

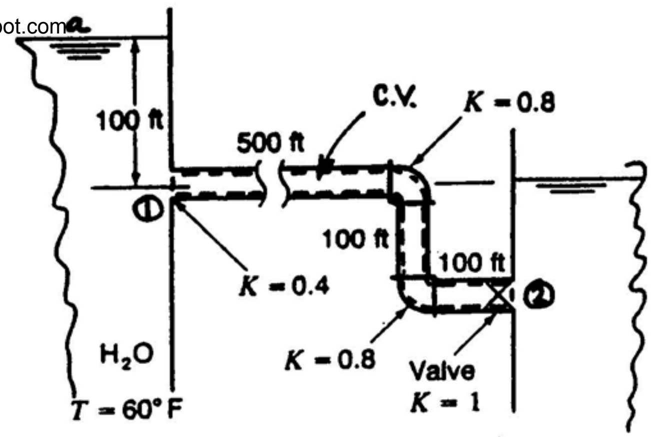


What should be the flow through the system shown. We have commercial steel pipe 6 in in diameter.

**First Law**

$$\frac{V_1^2}{2} + \frac{p_1}{\rho} + 100g = \frac{p_2}{\rho} + \frac{V_2^2}{2} + (h_l)_T \qquad (1)$$

**Bernoulli** between "a" and (1). Use **gauge** pressures.

$$\frac{p_a}{\rho} + 100g + \frac{V_a^2}{2} = \frac{p_1}{\rho} + \frac{V^2}{2} + 0$$

$$\therefore \quad \frac{p_1}{\rho} = 100g - \frac{V^2}{2} \qquad (2)$$

**Hydrostatics** at (2). $\quad p_2 = (\gamma)(100) = (62.4)(100) = 6{,}240 \ psf \ gauge$

Return to (1). Subst.

$$\left(100g - \frac{V^2}{2}\right) + 100g = \frac{6{,}240}{\rho} + f\frac{700}{\left(\frac{1}{2}\right)}\frac{V^2}{2} + 3\frac{V^2}{2}$$

$$\therefore \quad \frac{V^2}{2}[4 + 1{,}400f] = 3{,}220$$

Let $f = .015$ $\qquad \therefore \ V = 16.05 \ ft/\text{sec}$

$$Re = \frac{(16.05)\left(\frac{1}{2}\right)}{1.217\times10^{-5}} = 6.594\times10^5 \qquad \frac{e}{D} = \frac{.00015}{\left(\frac{1}{2}\right)} = .0003 \qquad \therefore \ f = .016$$

$\therefore$

$$V = 15.62 \ ft/\text{sec}$$

$$Q = 15.62\left(\frac{\pi}{4}\right)\left(\frac{1}{2}\right)^2 = 3.07 \ ft^3/\text{sec}$$

 http://ingesolucionarios.blogspot.com

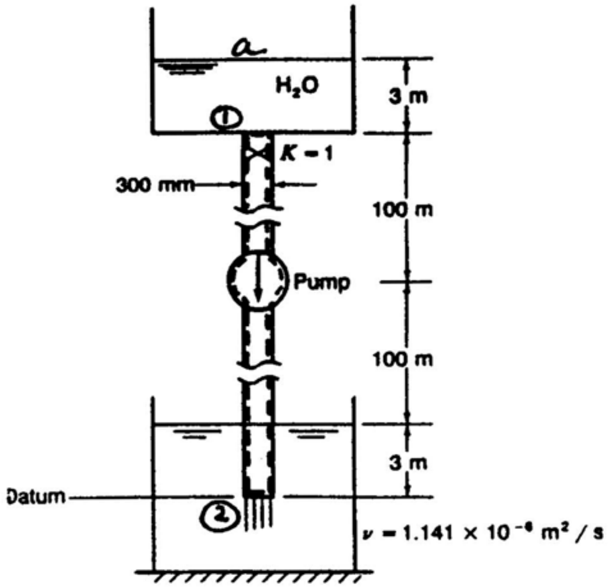


The pump in Fig. P9.62 develops $5 \times 10^3$ N-m/kg on the mass flow. How many liters per second flow through the commercial steel pipe from the upper tank to the lower tank? Take $\epsilon = 0.046$ mm.

**9.62 First Law**

$$\frac{V^2}{2} + \frac{p_1}{\rho} + gz_1 = \frac{V^2}{2} + \frac{p_2}{\rho} + gz_2 + \frac{dW}{dm} + (h_l)_T \tag{1}$$

$$\frac{p_1}{\rho} + 203g = \frac{p_2}{\rho} - 5{,}000 + f\left(\frac{203}{.300}\right)\frac{V^2}{2} + 1\,\frac{V^2}{2}$$

**Bernoulli between (a) and (1)**

$$\frac{V_a^2}{2} + 0 + 3g = \frac{p_1}{\rho} + \frac{V^2}{2} + 0$$

$$\frac{p_1}{\rho} = 3g - \frac{V^2}{2} \tag{2}$$

**Hydrostatics at (2).**

$$p_2 = (3)(9{,}806) = 2.942\times10^4 \ Pa$$

**Substitute**

$$\left(3g - \frac{V^2}{2}\right) + (203)g = \frac{2.942\times10^4}{1{,}000} - 5{,}000 + f\left(\frac{203}{.3}\right)\frac{V^2}{2} + \frac{V^2}{2}$$

$$6{,}991 = V^2 + 338.3f\ V^2 \tag{3}$$

http://ingesolucionarios.blogspot.com

**(cont.)**

$$\frac{e}{D} = \frac{.046}{300} = 1.533\times10^{-4} = .0001533$$

Let $\begin{cases} f = .013 \\ V = 36\ m/s \end{cases}$

$$Re = \frac{(36)(.300)}{1.141\times10^{-6}} = 9.462\times10^{6}$$

$$f = .013$$

$\therefore$

$$V = 36.0\ m/s$$

$$Q = (36.0)\left(\frac{\pi}{4}\right)(.300)^2 = 2{,}545\ L/s$$



http://ingesolucionarios.blogspot.com Edu_Zegarr_ch

http://ingesolucionarios.blogspot.com

8.63

Find the volume flow. The pump delivers 70-kW power on the flow.

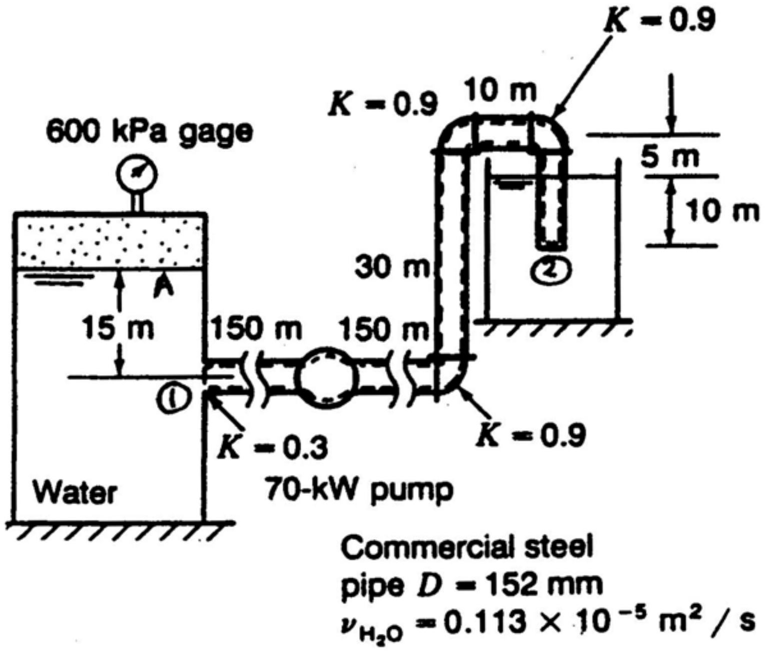


**First Law** for C.V. (use gauge pressures)

$$\frac{p_1}{\rho} + \frac{V_1^2}{2} + 0 = \frac{p_2}{\rho} + \frac{V_2^2}{2} + 15g + (h_l)_T + \frac{dW}{dm} \qquad (1)$$

**Bernioulli** at Entrance

$$0 + \frac{600{,}000}{1{,}000} + 15g = \frac{V^2}{2} + 0 + \frac{p_1}{\rho}$$

$$\therefore \quad \frac{p_1}{\rho} = 747.2 - \frac{V^2}{2} \qquad (2)$$

**Hydrostatics** at Exit

$$p_2 = 10\gamma = 98{,}060 \ Pa \qquad (3)$$

**Head Loss**

$$(h_l)_T = f\left(\frac{355}{.152}\right)\left(\frac{V^2}{2}\right) + 3\left(\frac{V^2}{2}\right)$$

$$\frac{e}{D} = \frac{.046}{152} = .0003$$

Let $f = .015$

http://ingesolucionarios.blogspot.com
**(cont.)**

$$\therefore \quad (h_l)_T = (.015)\left(\frac{355}{.152}\right)\left(\frac{V^2}{2}\right) + 1.5V^2 = 19.02\ V^2$$

Now go to First Law (1) and substitute:

$$\left(747.2 - \frac{V^2}{2}\right) = \frac{98{,}060}{1{,}000} + 15g + 19.02V^2 - \frac{70{,}000}{\dot{m}}$$

$$\dot{m} = (1{,}000)(V)\left(\frac{\pi}{4}\right)(.152)^2 = 18.146V$$

$$19.52V^2 - 502 - \frac{3{,}858}{V} = 0$$

$$\therefore \quad 19.52V^3 - 502V - 3{,}858 = 0$$

Solve by trial and error or on programmable calculator.

$$V = 7.273\ m/s$$

$$Re = \frac{(7.273)(.152)}{(.113\times10^{-5})} = 9.783\times10^5$$

$$f = .0155$$

$$\therefore \quad h_l = (.0155)\left(\frac{355}{.152}\right)\left(\frac{V^2}{2}\right) + 1.5V^2 = 19.60V^2$$

$$\therefore \quad 19.60V^3 - 502V - 3{,}858 = 0$$

$$V = 7.261\ m/s$$

$$Q = (7.261)\left(\frac{\pi}{4}\right)(.152)^2(1{,}000) = \boxed{131.8\ L/s}$$

http://ingesolucionarios.blogspot.com

If the exit pressure of the pump is 250 kPa gage and the desired pressure at $B$ is 120 kPa gage, what is the largest angle permitted for these conditions for $V = 1$ m/s? The fluid is water at a temperature of 20°C. If the pressure going into the pump is 100 kPa gage with the same diameter pipe, what power is the pump developing?

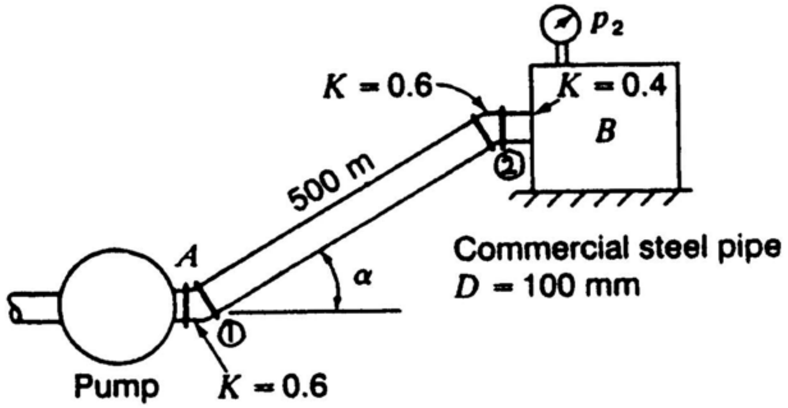


a) Use **modified Bernoulli** for pipe

$$\frac{V^2}{2} + gz_1 + \frac{p_1}{\rho} = \frac{V^2}{2} + gz_2 + \frac{p_2}{\rho} + (h_\ell) + (h_\ell)_M$$

$$0 + \frac{250{,}000}{998.2} = (9.81)(500)(\sin\alpha) + \frac{120{,}000}{998.2} + f\left(\frac{500}{.100}\right)\left(\frac{1^2}{2}\right) + 1.6\left(\frac{1^2}{2}\right) \qquad (1)$$

$$Re = \frac{(1)(.100)}{1.007\times10^{-6}} = 9.930\times10^4 \qquad \frac{e}{D} = \frac{.046}{100} = .00046$$

$$\therefore\ f = .0203$$

Go back to Eq. (1). $\alpha = .9192°$

b) $$\frac{dW}{dm} = \frac{250{,}000-100{,}000}{998.2} = 150.3\ \frac{N\text{-}m}{kg}$$

$$\therefore\ \frac{dW}{dt} = \frac{dW}{dm}\frac{dm}{dt} = (150.3)(1)\left(\frac{\pi}{4}\right)(.100)^2(998.2) = 1{,}178\,W$$

$$\frac{dW}{dt} = 1.178\ kW$$


http://ingesolucionarios.blogspot.com Edu_Zegarr_ch

http://ingesolucionarios.blogspot.com

8.65

Determine the *volume of flow* $Q$ from $A$ to $B$ in Fig. P9.65 if the *pump* at $E$ has the following *input* characteristics:

$$\Delta H_D = -\tfrac{1}{8}Q + 30 \text{ N-m/N}$$

with $Q$ in liters per second.

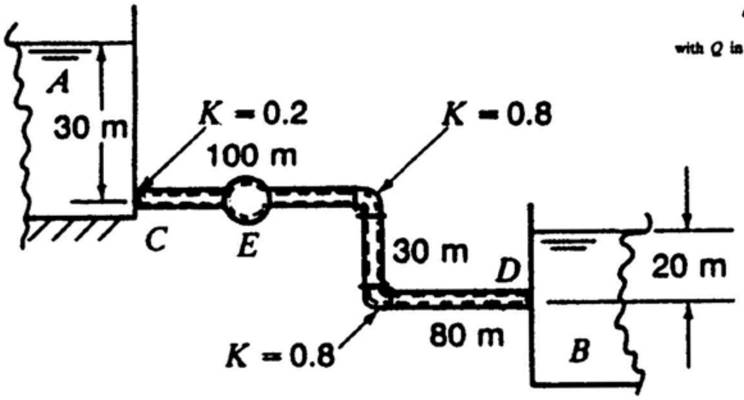


Commercial steel pipe

$D = 200$ mm

Water $\begin{cases} \rho = 1000 \text{ kg / m}^3 \\ \nu = 0.0113 \times 10^{-4} \text{ m}^2\text{ / s} \end{cases}$

$e = 0.040$ mm

**First Law** for pipe interior:

$$\frac{V_C^2}{2} + \frac{p_C}{\rho} + gz_C = \frac{V_D^2}{2} + \frac{p_D}{\rho} + gz_D + (h_l)_T - (\Delta H_D g)$$

$$\frac{p_C}{\rho} + 30g = \frac{p_D}{\rho} + (h_l)_T - \left(-\frac{1}{8}Q + 30\right)g \qquad (1)$$

**Bernoulli** in Tank A

$$0 + 0 + 30g = \frac{V_C^2}{2} + \frac{p_C}{\rho} + 0$$

$$\frac{p_C}{\rho} = 30g - \frac{V_C^2}{2} \qquad (2)$$

**Hydrostatics** in Tank B

$$p_B = (9{,}806)(20) \qquad (3)$$

Go back to (1) using $Q = V_C\left(\frac{\pi}{4}\right)(.200)^2(1{,}000)$ $L/s$

http://ingesolucionarios.blogspot.com

(con.)

$$\left[30g - \frac{V_C^2}{2}\right] + 30g = \frac{(9{,}806)(20)}{1{,}000} + f\left(\frac{210}{.200}\right)\left(\frac{V_C^2}{2}\right) + 1.8\,\frac{V_C^2}{2} - \left[-V_c\left(\frac{\pi}{4}\right)\frac{(.200)^2(1{,}000)}{8} + 30\right]g \quad (4)$$

$$\frac{e}{D} = \frac{.040}{200} = .0002$$

Let $f = .014$ . Go to (4).

$$-686.78 + 38.52V_C + 8.75V_C^2 = 0$$

$$V_C = \frac{-38.52 \pm \sqrt{38.52^2 + (4)(686.78)(8.75)}}{(2)(8.75)}$$

$$V_C = 6.93 \;\; m/s$$

**Check** $\quad Re = \dfrac{(6.93)(.200)}{.0113\times10^{-4}} = 1.226\times10^6 \qquad f = .0146$

Go back to Eq. (4).

$$-686.78 + 38.52\,V_C + 9.065\,V_C^2 = 0$$

$$\therefore \quad V = \frac{-38.52 \pm \sqrt{38.52^2 + (4)(686.78)(9.065)}}{(2)(9.065)}$$

$$V = 6.835 \;\; m/s$$

$$Q = (6.835)\left(\frac{\pi}{4}\right)(.200)^2 = .2147 \;\; m^3/s$$

$$\boxed{Q = 214.7 \;\; L/s}$$

8.66 http://ingesolucionarios.blogspot.com

A pump is developing 100 kW on a flow of water of 500 L/s. What is the head $\Delta H_D$ required by the pump. Water is at 5°C.

$$\frac{dW}{dt} = -100{,}000\ N\text{-}m/s$$

$$\frac{dW}{dm} = \frac{\frac{dW}{dt}}{\frac{dm}{dt}} = \frac{-100{,}000}{(.500)(1{,}000)} = -200\ W/kg$$

$$g\,\Delta H_D = -\frac{dW}{dm} = -(-200)$$

$$\boxed{\Delta H_D = 20.39\ m}$$

8.67

A pipe of diameter 1 m carries crude oil (S.G. = 0.86) over a long distance. If $f = 0.02$ and the flow rate is 1000 L/s, what should be the maximum spacing of pumps along the length of the pipe if the exit pressure of the oil at the end of the pipe is 200 kPa gage and if the oil pressure in the pipe must not exceed 300 kPa gage? Determine the head $\Delta H_D$ for the pumps and the power.

For maximum spacing we will assume each pump merely overcomes the pressure drop from the pipe length from previous pump. This pressure drop must not exceed $(300-200) = 100\ kP$ . Hence look at $h_\ell$ .

a) $$h_\ell = f\,\frac{L}{D}\,\frac{V^2}{2} = (.02)\left(\frac{L}{1}\right)\frac{\left[\dfrac{(1)}{\frac{\pi}{4}(1^2)}\right]^2}{2} = .01621L$$

$$h_\ell = \frac{\Delta p}{\rho} = \frac{100{,}000}{860} = .01621L$$

$$L = 7{,}173\ m = \boxed{7.173\ km}$$

b) $$g\,(\Delta H_D) = \frac{100{,}000}{860}$$

$$\boxed{\Delta H_D = 11.85\ m}$$



http://ingesolucionarios.blogspot.com Edu_Zegarr_ch

In the preceding problem the pipeline has a slope of 0.2° upward from the horizontal. What are the maximum spacing of pumps, the $\Delta H_D$ needed for the pumps, and the required power?

a) The pumps now must overcome the head loss and gravity. Hence:

$$g(\Delta H_D) = h_l + g(L \sin .2°)$$

$$g(\Delta H_D) = (.02)\left(\frac{L}{1}\right)\frac{\left[\dfrac{1}{\frac{\pi}{4}1^2}\right]^2}{2} + .03424L = .050451L$$

$$g(\Delta H_D) = \frac{100{,}000}{860} = .050451\ L$$

$$\boxed{L = 2{,}305\ m\ =\ 2.305\ km}$$

b) $g(\Delta H_D) = \dfrac{100{,}000}{860}$

$$\Delta H_D = 11.85\ m$$

c) $\dfrac{dW}{dm} = (116.3)(1)(860) = 100\ kW$

http://ingesolucionarios.blogspot.com

8.69 What is the flow q for the system shown. The pump has the characteristics shown in Fig. P9.69A. What is the power required?

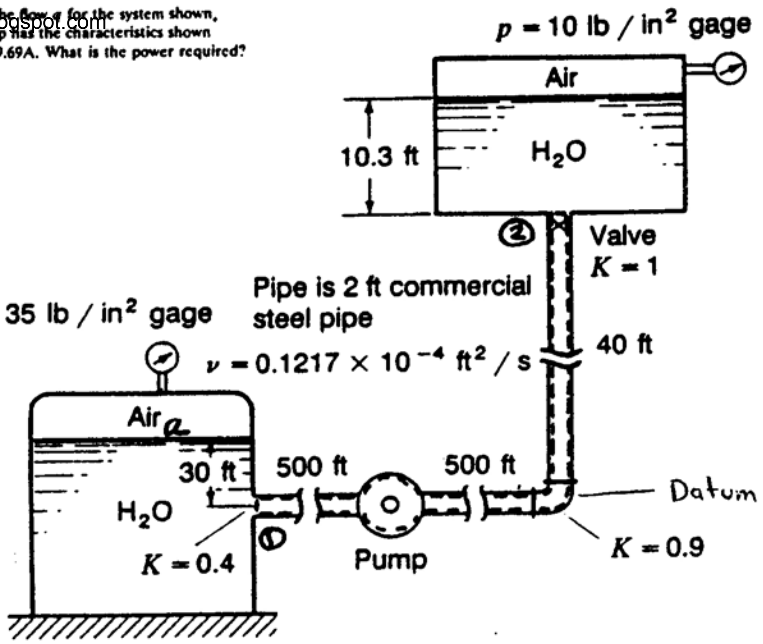


Express **first law for thermodynamics** for pipe interior as shown.

$$\frac{p_1}{\rho} + \frac{V_1^2}{2} + gz_1 = \frac{p_2}{\rho} + \frac{V_2^2}{2} + gz_2 + (h_l) - g(\Delta H_D) \qquad \text{(a)}$$

**Bernoulli** in left tank. Use gauge pressures.

$$\frac{(35)(144)}{1.938} + 30g = \frac{p_1}{\rho} + \frac{V^2}{2} + 0$$

$$\frac{p_1}{\rho} = 3{,}567 - \frac{V^2}{2} \qquad \text{(b)}$$

**Hydrostatics** in right-hand tank.

$$\frac{p_2}{\rho} = \frac{1}{\rho}\left[(10)(144)+(10.3)(62.4)\right] = 1{,}074 \qquad \text{(c)}$$

Subst. (b) and (c) into (a).

$$\left(3{,}567 - \frac{V^2}{2}\right) = 1{,}074 + (g)(40) + f\left[\frac{1{,}040}{(2.00)}\right]\left[\frac{V^2}{2}\right] + 2.3\,\frac{V^2}{2} - g(\Delta H_D) \qquad \text{(d)}$$

Assume $Q_1 = 80\ cfs$. Then:

$$V_1 = \frac{80}{\left(\frac{\pi}{4}\right)(2.00)^2} = 25.5 \quad ft/\text{sec}$$



http://ingesolucionarios.blogspot.com Edu_Zegarr_ch

http://ingesolucionarios.blogspot.com

**(cont.)**

$$(Re)_1 = \left(\frac{(25.5)(2.00)}{.1217\times 10^{-4}}\right) = 4.18\times 10^6 \qquad \therefore\ f_1 = .0118$$

Solve for $(\Delta H_D)_1$ in Eq. (d).

$$(\Delta H_D)_1 = 57.9 \quad ft$$

The point (1) for $(\Delta H_D)_1$ and $Q_1$ is above $Q$ curve. We take as a second estimate

$$Q_2 = 70 \qquad \therefore\ V_2 = \frac{70}{\left(\frac{\pi}{4}\right)(2)^2} = 22.28 \quad ft/sec$$

$$(Re)_2 = \frac{(22.28)(2)}{.1217\times 10^{-4}} = 3.66\times 10^6 \qquad f_2 = .0118$$

$$(\Delta H_D)_2 = 35.4 \quad ft$$

New point is just above $Q$ line. Third estimate can now be easily made.

$$Q_3 = 76 \quad cfs \qquad V_3 = \frac{76}{\left(\frac{\pi}{4}\right)(2^2)} = 24.19$$

$$(Re)_3 = \frac{(24.19)(2)}{.1217\times 10^{-4}} = 3.96\times 10^6 \qquad f_3 = .0118$$

$$(\Delta H_D)_3 = 48.4 \ ft$$

We are close enough to the intersection so that we can say:

$$Q = 76 \quad cfs$$

The power needed for this operation is then

$$Power = \frac{(g)(48.4)(1.938)(76)}{(.75)(550)} = \boxed{556\ HP}$$



http://ingesolucionarios.blogspot.com Edu_Zegarr_ch

What should the pipe size be to cause a volumetric flow of 120 ft³/s?

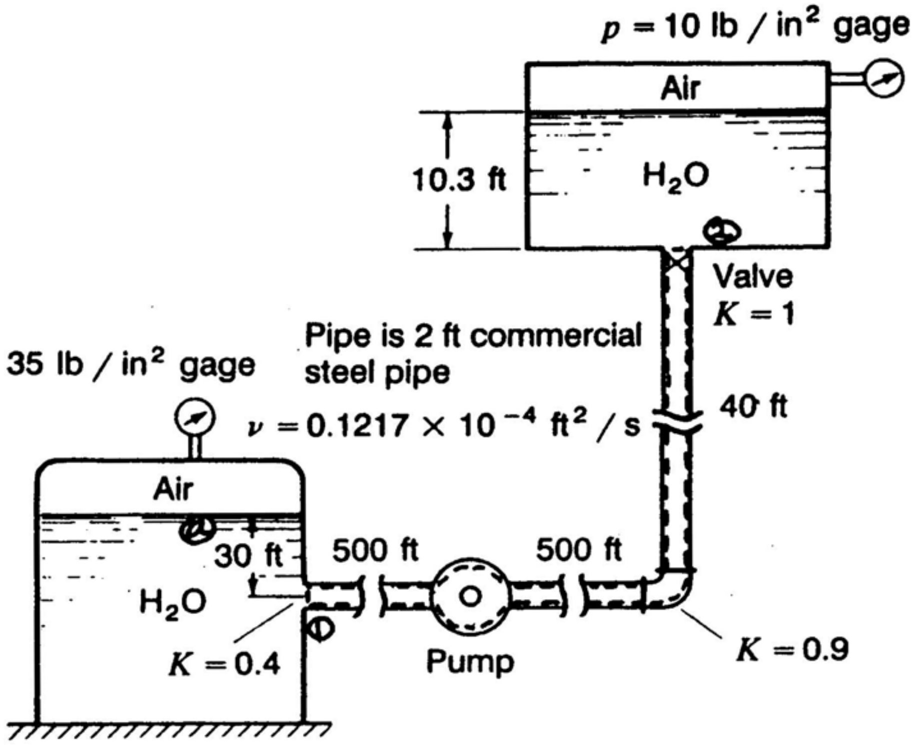


Using the diagram of the previous problem, we first express the **first law of thermodynamics** for the control volume.

$$\frac{p_1}{\rho} + \frac{V^2}{2} + gz = \frac{p_2}{\rho} + \frac{V^2}{2} + 40g + h_l - g(\Delta H_D) \qquad \text{(a)}$$

**Bernoulli** for flow in left tank is

$$\frac{(35)(144)}{1.938} + (30)(32.2) = \frac{V^2}{2} + \frac{p_1}{\rho} \qquad \frac{p_1}{\rho} = 3{,}564 - \frac{V^2}{2}$$

**Hydrostatics** for right tank.

$$\frac{p_2}{\rho} = \frac{1}{\rho}[(10)(144)+(10.3)(62.4)] = 1{,}074$$

Going back to Eq. (a)

$$\left(3{,}564 - \frac{V^2}{2}\right) + (32.2)(32.5) = 1{,}074 + 40g + f\left(\frac{1{,}040}{D}\right)\left(\frac{V^2}{2}\right) + 2.3\left(\frac{V^2}{2}\right) \qquad \text{(b)}$$

Note $$V = \frac{q}{\left(\frac{\pi D^2}{4}\right)} = \frac{120}{\left(\frac{\pi}{4}D^2\right)} = \frac{152.8}{D^2}$$



http://ingesolucionarios.blogspot.com Edu_Zegarr_ch

http://ingesolucionarios.blogspot.com


Let $f$=.0112 . We calculate $D$ . Eq. (b) becomes:

$$2{,}248.5D^5 - 3.852\times10^4 D - 1.360\times10^5 = 0 \qquad \text{(c)}$$

The approximation of $D$ is: $D = 2.27\ ft$

$$\therefore \quad V = \frac{120}{\frac{(\pi)(2.27)^2}{4}} = 29.63 \quad ft/\text{sec}$$

$$Re = \frac{(29.63)(2.27)}{.1217\times10^{-4}} = 5.57\times10^6 \qquad f = .015$$

Now go to Eq. (c). Use latest $f$ and solve for $D$ by trial and error using values a bit larger than $D = 2.27$ . The equation is:

$$2{,}248.5D^5 - 3.852\times10^4 D - 1.396\times10^5 = 0$$

$$\boxed{D = 2.54\ ft}$$

 http://ingesolucionarios.blogspot.com

If the pump shown has flow characteristics corresponding to Fig. 9.26 of Example 9.5, what is the volumetric flow and the power needed by the pump? For this problem, take the pipe diameter to be 200 mm throughout. T = 20°C. Neglect minor losses.

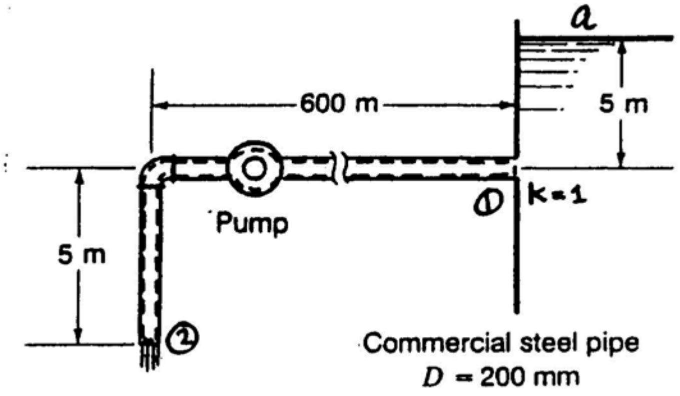


From **First Law** (use gauge pressures):

$$\left(\frac{V_1^2}{2} + 5g + \frac{p_1}{\rho}\right) = \frac{V_2^2}{2} + 0 + 0 + f\left(\frac{L}{D}\right)\left(\frac{V^2}{2}\right) - (\Delta H_D)(g)$$

$$5g + \frac{p_1}{\rho} = f\left(\frac{605}{.200}\right)\left(\frac{V^2}{2}\right) - (\Delta H_D)(g) \qquad (1)$$

**Bernoulli** from a to 1.

$$\frac{V_a^2}{2} + 5g + 0 = \frac{p_1}{\rho} + 0 + \frac{V^2}{2}$$

$$\frac{p_1}{\rho} = 5g - \frac{V^2}{2} \qquad (2)$$

Subst. into (1).

$$10g - \frac{V^2}{2} = f\frac{605}{.200}\frac{V^2}{2} - (\Delta H_D)(g)$$

$$10g - \frac{V^2}{2} = f(1{,}513)(V^2) - (\Delta H_D)(g) \qquad (3)$$

Assume $q = 80\ L/s$

$$V = \frac{.080}{\left(\frac{\pi}{4}\right)(.2)^2} = 2.546\ m/s$$

http://ingesolucionarios.blogspot.com

**(cont.)**

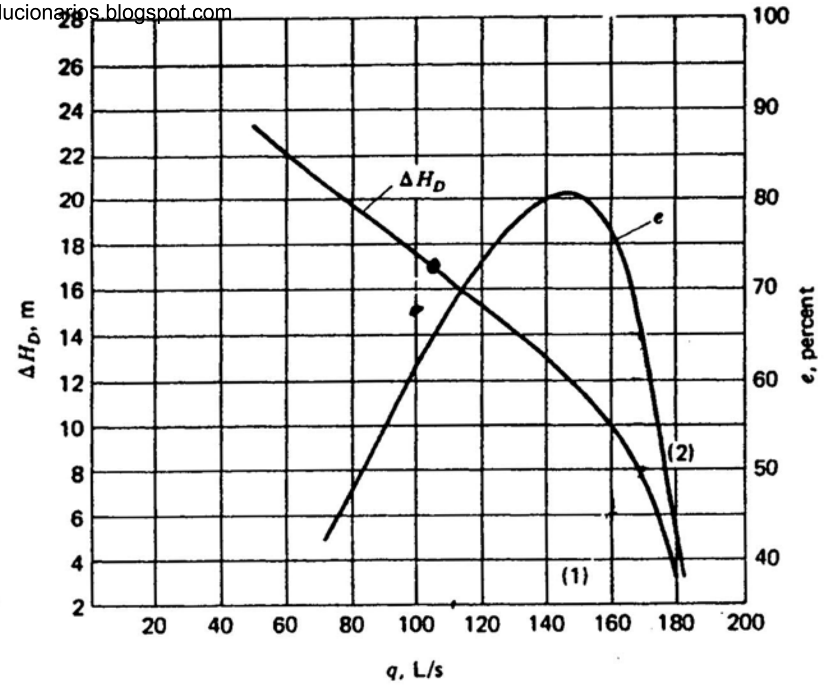


$$Re = \frac{(2.546)(.20)}{1.007\times10^{-6}} = 5.06\times10^5 \qquad \frac{e}{D} = \frac{.046}{200} = .00023$$

$$f = .016 \qquad \therefore \quad \Delta H_D = 63.47 \ m$$

Let $q = 100 \ L/s$

$$V = \frac{.100}{\left(\frac{\pi}{4}\right)(.2)^2} = 3.183 \qquad Re = \frac{(3.183)(.2)}{1.007\times10^{-6}} = 6.3\times10^5 \qquad \frac{e}{D} = .00023$$

$$f = .0157 \qquad \therefore \quad \Delta H_D = 15.05 \ m$$

Let $q = 105 \ L/s$

$$V = \frac{.105}{\left(\frac{\pi}{4}\right)(.2)^2} = 3.342 \ m/s \qquad Re = 6.64\times10^5 \qquad \frac{e}{D} = .00023$$

$$f = .0156 \qquad \therefore \quad \Delta H_D = 17.44 \qquad OK$$

$$\therefore \quad \boxed{q = 105 \ L/s}$$

http://ingesolucionarios.blogspot.com

8.72

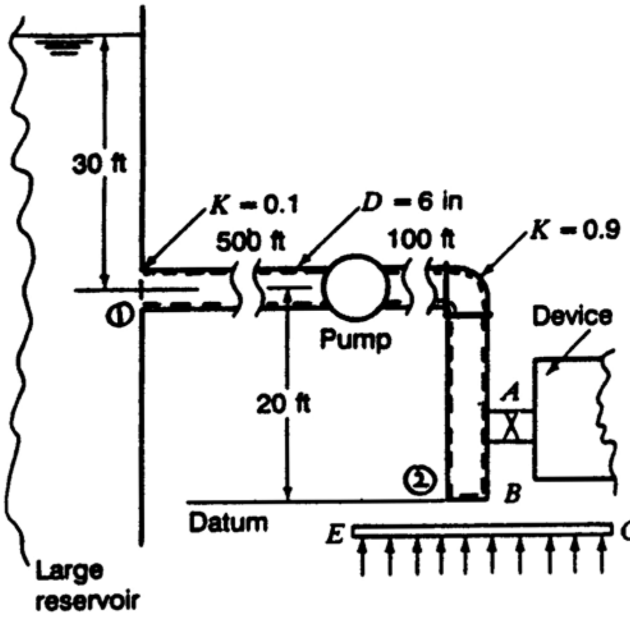


A 6-in commercial steel pipe conducts 5 ft³/s of water at 60°F to a device. with valve *B* closed and valve *A* open in an emergency, valve *A* is closed and valve *B* is *opened* so the 5 ft³/s hits surface *EG* steadily to run off. For this latter case, what is the horsepower required from the pump, and what is the force on *EG*? Consider the exit to be a free jet and neglect the distance from *B* to *EG*.

**9.72** **First Law of Thermodynamics** for C.V. Use gauge pressures.

$$\frac{V^2}{2} + gz_1 + \frac{p_1}{\rho} = \frac{V_2^2}{2} + gz_2 + \frac{p_2}{\rho} + (h_l)_T + \frac{dW}{dm}$$

$$20g + \frac{p_1}{\rho} = (h_l)_T + \frac{dW}{dm} \qquad (1)$$

**Bernoulli at (1).** $$0 + 30g + 0 = \frac{p_1}{\rho} + \frac{V_1^2}{2} + 0$$

$$\frac{p_1}{\rho} = 30g - \frac{V_1^2}{2} \qquad (2)$$

**Head Loss** $$(h_l)_T = f\,\frac{L}{D}\,\frac{V^2}{2} + (1)\left(\frac{V^2}{2}\right)$$

$$V = \frac{5}{\left(\frac{\pi}{4}\right)\left(\frac{1}{2}\right)^2} = 25.46\ ft/\text{sec}$$

$$Re = \frac{VD}{\nu} = \frac{(25.46)\left(\frac{1}{2}\right)}{1.217\times10^{-5}} = 1.046\times10^6 \qquad \frac{e}{D} = \frac{.00015}{.5} = .0003$$

∴ **From Moody** $f = .0156$

http://ingesolucionarios.blogspot.com
(cont.)

$$(h_\ell)_T = (.0156)\left(\frac{620}{\frac{1}{2}}\right)\left(\frac{25.46^2}{2}\right) + \frac{25.46^2}{2} = 6.594\times10^3 \quad \frac{ft\text{-}lb}{slug} \qquad (3)$$

Go back to (1). Subst. (2) and (3).

$$20g + \left(30g - \frac{25.46^2}{2}\right) = 6.594\times10^3 + \frac{dW_s}{dm}$$

$$\frac{dW_s}{dm} = -5{,}308 \quad \frac{ft\text{-}lb}{slug}$$

$$\frac{dW_s}{dt} = \frac{dW_s}{dm}\frac{dm}{dt} = -(5{,}308)(1.938)(5) = 51{,}440 \ \frac{ft\text{-}lb}{\sec}$$

$$\frac{dW_s}{dt} = \frac{5.144\times10^4}{550} = \boxed{93.52 \ HP}$$

Force on plate

$$F = \rho V^2 A = -(1.938)(25.46)^2\left(\frac{\pi}{4}\right)\left(\frac{1}{2}\right)^2$$

$$\boxed{F = 246.7 \ lb}$$

http://ingesolucionarios.blogspot.com

8.73 **NOTE**

Fuel oil is pumped in the winter through an exposed pipe of diameter 200 mm and of length 20 m at a temperature of 5°C. The pipe is commercial steel. The flow is at the rate of 220 L/s. What change in head $\Delta H_D$ and in power of the pump is needed to do the same job in the summer with a fuel temperature of 35°C? Use $\nu$ at 5°C = $2.323 \times 10^{-3}$ m²/s and $\nu$ at 35°C = $3.252 \times 10^{-4}$ m²/s. The specific gravity of fuel oil is 0.97.

$$V = \frac{(.220)}{\left(\frac{\pi}{4}\right)(.2)^2} = 7.003 \ m/s$$

a) **Winter**

$$Re = \frac{(7.003)(.2)}{2.323 \times 10^{-3}} = 602.9$$

∴ **Laminar flow**

**First Law**

$$(g)(\Delta H_D) = h_l = \frac{(128)(20)(.220)(2.323 \times 10^{-3})}{(\pi)(.2)^4}$$

$$\Delta H_D = 26.53 \quad m$$

b) **Summer**

$$Re = \frac{(7.003)(.2)}{3.252 \times 10^{-4}} = 4.31 \times 10^3$$

Flow is now **turbulent.**

$$\frac{e}{D} = \frac{.046}{200} = .00023 \qquad \therefore \ f = .0385$$

**First Law**

$$(g)(\Delta H_D) = f\left(\frac{L}{D}\right)\left(\frac{V^2}{2}\right) = (.0385)\left(\frac{20}{.2}\right)\left(\frac{7.003^2}{2}\right)$$

$$(\Delta H_D) = 9.623 \ m$$

Change in total head is $26.53 - 9.623 = 16.907 \ m$ . Increase in power needed is:

$$\frac{dW}{dm} = (g)(\Delta H_D) = (9.81)(16.907) = 165.9 \quad \frac{N-m}{kg}$$

$$\frac{dW}{dt} = (165.9)[(.220)(1{,}000)(.970)] = \boxed{35.4 \ kW}$$



http://ingesolucionarios.blogspot.com Edu_Zegarr_ch

http://ingesolucionarios.blogspot.com

8.74

A pump is developing 100 kW of power on a vertical flow in Fig. P9.74 for a skyscraper. At 30 m a turbine draws off 20 kW of power. How high can the pipe go to the next pump if we require an inlet pressure for this pump of 10,000 Pa gage? The flow $q$ is 1 $m^3/s$. Take $\nu = 0.01141 \times 10^{-4}$ $m^2/s$.

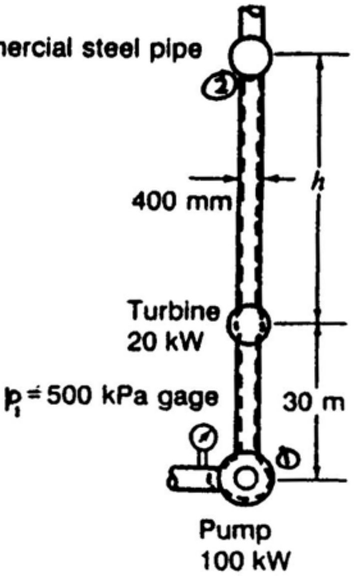


**Simple First Law** (use gauge pressures).

$$\frac{p_1}{\rho} + \frac{V_1^2}{2} + gz_1 = \frac{p_2}{\rho} + \frac{V_2^2}{2} + gz_2 + \frac{dW}{dm} + h_\ell$$

$$\frac{500{,}000}{1{,}000} + 0 = \frac{10{,}000}{1{,}000} + (g)(30+h) - \frac{80{,}000}{(1)(1{,}000)} + h_\ell \qquad (1)$$

$$V = \frac{1}{\frac{(\pi)(.4)^2}{4}} = 7.96 \; m/s$$

$$\frac{e}{D} = \frac{.046}{400} = .000115 \qquad \left\{ Re = \frac{VD}{\nu} = \frac{(7.96)(.4)}{.011441 \times 10^{-4}} = 2.79 \times 10^6 \right.$$

$$\therefore \; f = .0125$$

$$\therefore \; h_\ell = (.0125)\,\frac{(30+h)}{(.4)}\left(\frac{7.96^2}{2}\right)$$

Go back to (1).

$$570 = (9.81)(30+h) + (.990)(30+h)$$

$$246 = (9.81 + .990)(h)$$

$$\boxed{h = 22.8 \; m}$$

http://ingesolucionarios.blogspot.com 

http://ingesolucionarios.blogspot.com

8.75

Water enters a pump in a 600-mm pipe and leaves in a 400-mm pipe at an elevation of 0.3 m above the entrance. The flow is 600 L/s. If there is a static pressure rise of 50,000 Pa, what is the head $\Delta H_D$ developed by the pump? What is the power needed to run the pump if the efficiency is 65%? Water is at 30°C.

$$V_1 = \frac{.600}{\left(\frac{\pi}{4}\right)(.600^2)} = 2.122 \ m/s$$

$$V_2 = \left(\frac{.600}{.400}\right)^2 (2.122) = 4.775 \ m/s$$

$$\Delta H_D = \frac{V_2^2 - V_1^2}{2g} + .3 + \frac{50,000}{(995.7)(9.81)} = \boxed{6.351 \ m}$$

$$POWER = \frac{(g)(6.351)(.600)(995.7)}{.65} = \boxed{57.27 \ kW}$$

8.76

Crude oil (S.G. = 0.86) is being transported in a 500-mm steel pipe over a distance of 100 km. At a position about midway, someone has tapped in on the pipe and is drawing off some oil illegally. If the pressure drop noted by pressure gages stationed every 2 km is 3000 Pa before the suspected point and is 2800 Pa after the suspected point, how much oil is being taken away illegally? The temperature is 20°C.

**Before TAP** $\quad \frac{\Delta p}{\rho} = f\left(\frac{L}{D}\right)\left(\frac{V^2}{2}\right)$

$$\frac{3,000}{860} = f\left(\frac{2,000}{.500}\right)\left(\frac{V^2}{2}\right)$$

Guess at $f$ to be .03 $\quad \therefore \ V = .2411 \ m/s$

$$Re = \frac{(.2411)(.500)(860)}{(1.7\times10^{-4})(47.9)} = 1.273\times10^4$$

$$\frac{e}{D} = \frac{.046}{500} = 9.2\times10^{-5} = .000092$$

**From Moody** $\quad f = .029$

New $V$ $\quad \frac{3,000}{860} = (.029)\left(\frac{2,000}{.500}\right)\left(\frac{V^2}{2}\right) \quad V = .2452 \ m/s$

$\therefore Q_1$ before TAP is:

$$Q_1 = (.2452)\left(\frac{\pi}{4}\right)(.500)^2 = .0482 \ m^3/s = \boxed{48.12 \ L/s}$$

http://ingesolucionarios.blogspot.com
(cont.)

**After TAP**

$$\frac{2{,}800}{860} = f\left(\frac{2{,}000}{.5}\right)\left(\frac{V^2}{2}\right)$$

Use $f = .029$ from previous work. $V = .2369\ m/s$

$$Re = \frac{(.2369)(860)\left(\frac{1}{2}\right)}{(1.7\times10^{-4})(47.9)} = 1.251\times10^4 \qquad \therefore\ f\ \ OK$$

$Q_2$ after TAP

$$Q_2 = (.2369)\left(\frac{\pi}{4}\right)(.5)^2 = .04652\ m^3/s = \boxed{46.52\ L/s}$$

∴ Hence oil diversion is

$$Q_1 - Q_2 = 48.14 - 46.52 = \boxed{1.620\ L/s}$$

8.77

Suppose you had two identical pumps directly in series in the system whose performance per pump is as in Fig. 8.26. If the flow is 100 L/s, *what is the increase in head from the pumps*? The pipe diameter is 200 mm. What is the power input to the pumps?

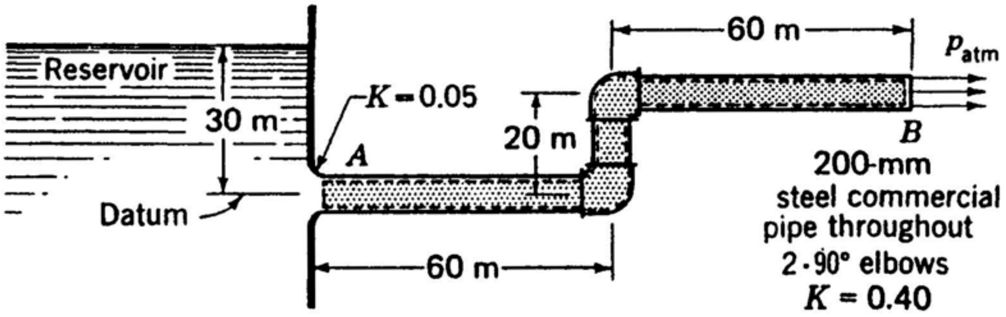


$\Delta H_D$ per pump is 17.6 $m$

$\nu = .0113 \times 10^{-4}\ m^2/s$
$\rho = 999\ kg/m^3$

$$\therefore\ (\Delta H_D)_{TOTAL} = (2)(17.6) = \boxed{35.2\ m}$$

Efficiency of each pump is 61% .

$$\therefore\ POWER = \frac{[(\Delta H_D)_{TOTAL}(g)]\left(\frac{N-m}{kg}\right)\left(\frac{dm}{dt}\right)\left(\frac{kg}{sec}\right)}{.61} = \frac{[(35.2)(9.81)](.100)(999)}{.61}$$

$$\boxed{POWER = 56.55\ kW}$$

http://ingesolucionarios.blogspot.com
**(cont.)**

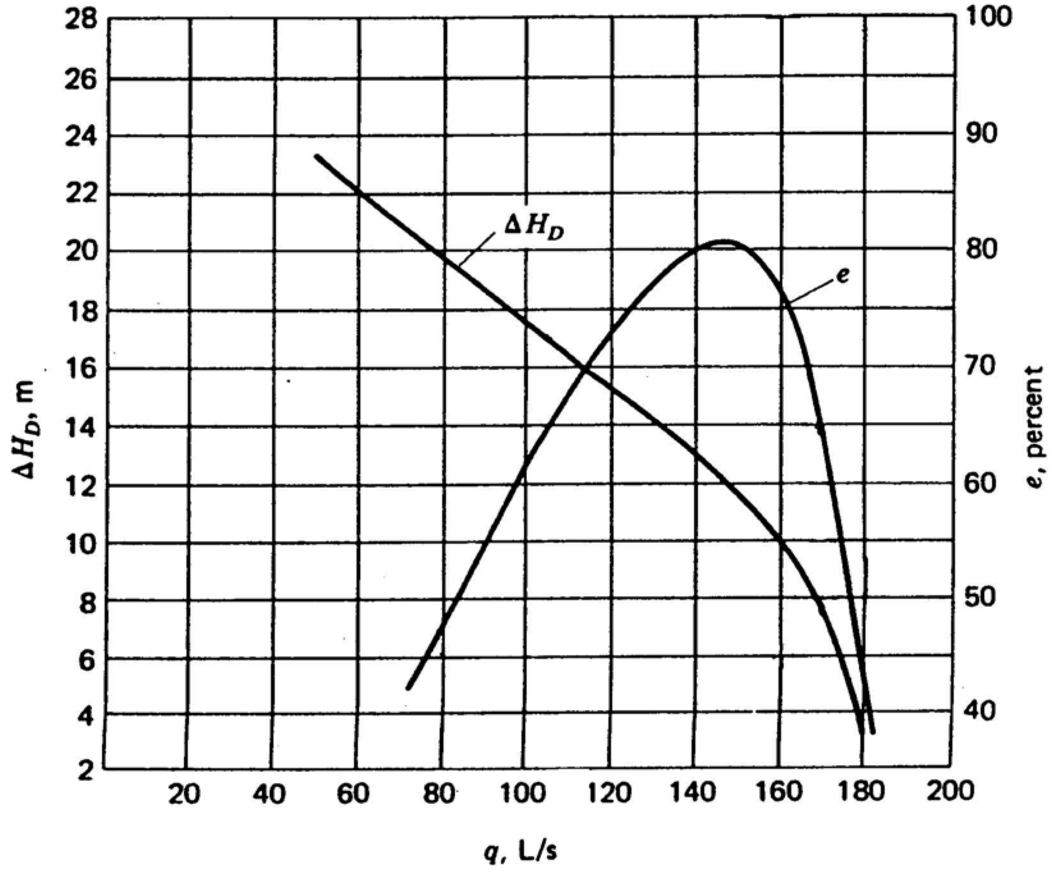


http://ingesolucionarios.blogspot.com
Edu_Zegarr_ch

http://ingesolucionarios.blogspot.com

**Do the preceding problem for the pumps directly in parallel for a total flow of 160 L/s. What is the power delivered to the flow? What is the power input to the pumps?**

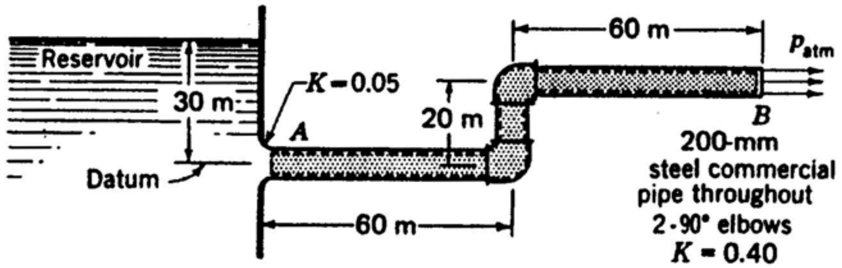


$\nu = .0113 \times 10^{-4}\ m^2/s$
$\rho = 999\ kg/m^3$

Each pump then delivers 80 *L/s* . The $\Delta H_D$ per pump is then:

$$(\Delta H_D) = 19.7\ m$$

$$\therefore\ (\Delta H_D)_{TOTAL} = 19.7\ m$$

$$\text{Power to Flow} = (19.7)(g)(.160)(999) = \boxed{30.89\ kW}$$

$$\text{Power to Pumps} = \frac{(2)(19.7)(g)(.080)(999)}{.475} = \boxed{65.03\ kW}$$

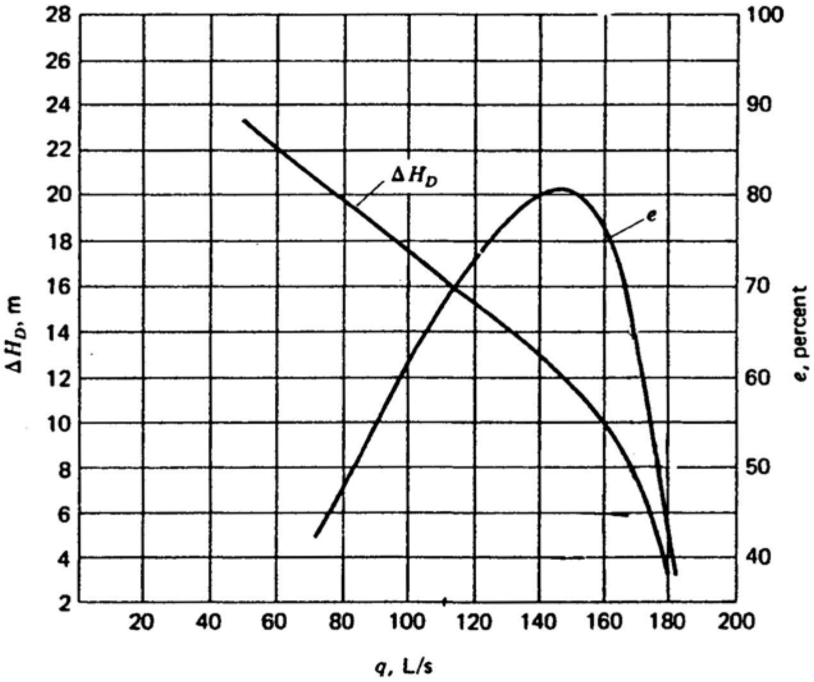

http://ingesolucionarios.blogspot.com

8.79

Sketch the hydraulic and energy grade lines for the pipe in Example 8.2. Calculate the values of key points of the hydraulic grade line. Take as the datum the centerline of the lowest pipe. Use results of the calculations in Example 8.2.

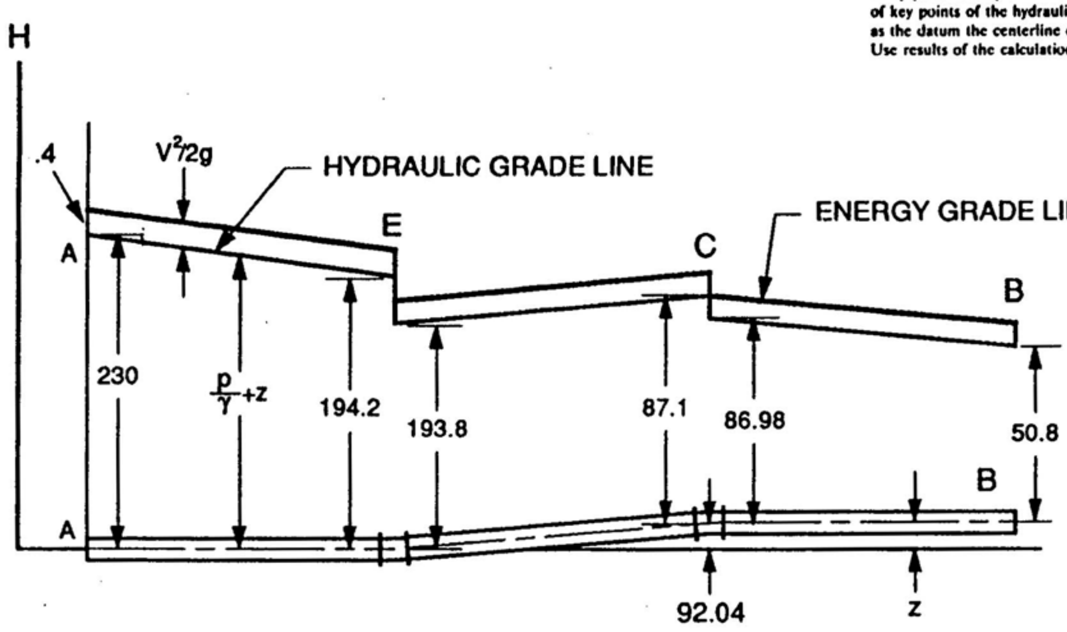


**At A:**

$$\frac{p}{\gamma} = \frac{(100)(144)}{62.4} = 230\,ft$$

$$\frac{V^2}{2g} = \frac{\left[\frac{1}{\left(\frac{\pi}{4}\right)\left(\frac{1}{2}\right)^2}\right]^2}{2g} = 403\,ft \qquad V = 5.093 \quad ft/sec$$

∴ Elevation of hydraulic grade line.

$$y_A = \frac{p}{\gamma} + z = 230 \quad ft$$

$$H_A = \frac{p}{\gamma} + z + \frac{V^2}{2g} = 230.4 \quad ft$$

**At E:**

http://ingesolucionarios.blogspot.com
**(cont.)**

$$\frac{p}{\gamma} = 230 - (.017)\left(\frac{\frac{5{,}280}{2}}{\frac{1}{2}}\right)\left(\frac{V^2}{2}\right)\left(\frac{1}{g}\right) = 193.84 \quad ft$$

$y_E = 193.8$ ft  $H_E = 194.2$ ft  $\Delta y_E = .1611$ ft

**At C:**

$$\frac{p}{\gamma} = 194.0 - z_c - (.017)\left(\frac{\frac{5{,}280}{5}}{\frac{1}{2}}\right)\left(\frac{V^2}{2}\right)\left(\frac{1}{g}\right)$$

$$= 194 - 92.04 - (.017)\left(\frac{\frac{5{,}280}{5}}{\frac{1}{2}}\right)\left(\frac{5.093^2}{2}\right)\left(\frac{1}{32.2}\right) = 87.1 \quad ft$$

**At B:**

$$\frac{p}{\gamma} = 86.98 - (.017)\left(\frac{\frac{5{,}280}{2}}{\frac{1}{2}}\right)\left(\frac{5.093^2}{2}\right)\left(\frac{1}{32.2}\right) = 50.82 \quad ft$$

 http://ingesolucionarios.blogspot.com

**Sketch the hydraulic and energy grade lines for the pipe in Example 8.3. Calculate the key points of the hydraulic grade line using the lowest pipe point as a datum. Use results of Example 9.3 as needed. The pump is 150 m from the left end of the pipe.**

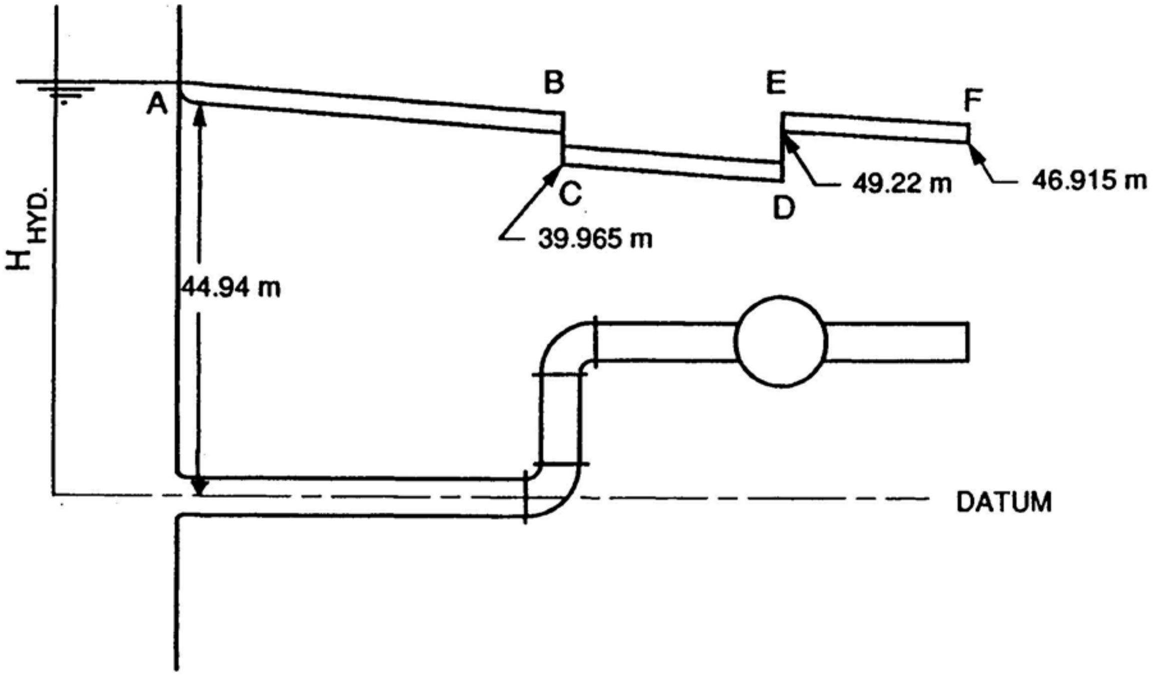


**At A:**

$$H_{yd} = 46 - \frac{V^2}{2g}(1.05) = 46 - \frac{4.456^2}{2g}(1.05) = 44.94 \quad m$$

**At B:**

$$H_{yd} = 44.94 - (.0152)\left(\frac{60}{.2}\right)\left(\frac{4.456^2}{2g}\right) = 40.32 \quad m$$

**At C:**

$$H_{Hyd} = 40.32 - (.0152)\left(\frac{20}{.2}\right)\left(\frac{4.456^2}{2g}\right) - (2)(.9)\left(\frac{4.456^2}{2g}\right) = 36.965 \quad m$$

**At D:**

http://ingesolucionarios.blogspot.com

**(cont.)**

$$H_{Hyd} = 36.95 - (.0152)\left(\frac{30}{.2}\right)\left(\frac{4.456^2}{2g}\right) = 34.66$$

**At E:**

Note $\qquad Power = (H_D)_{Total}(g)(\rho q)$

$$H_{Hyd} = 34.66 + (H_D)_{Total} = 34.66 + \frac{(20)(1{,}000)}{(g)(1{,}000)(.140)} = 49.22$$

**At F:**

$$H_{Hyd} = 49.22 - (.0152)\left(\frac{30}{.2}\right)\left(\frac{4.456^2}{2g}\right) = 46.915 \quad m$$

**Check**

At B $\qquad H_{Hyd} = z + \frac{p_B}{\gamma} = 20 + \frac{264{,}000}{9{,}806} = 46.22 \quad m$ $\qquad$ o.k.



http://ingesolucionarios.blogspot.com Edu_Zegarr_ch

http://ingesolucionarios.blogspot.com

Sketch the hydraulic grade line and the energy grade line for the pipe shown in Fig. 8.81. Evaluate key points for the hydraulic grade line. The turbine is developing 50 kW. The water is at 5°C.

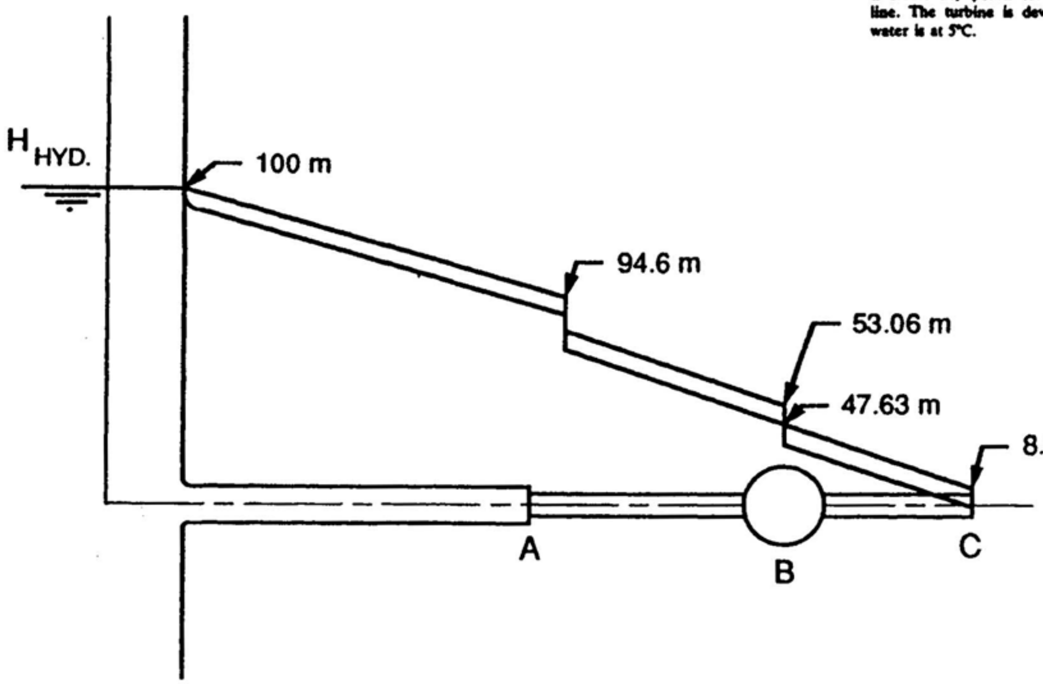


First compute $q$ . Use **first law** for interior of pipe.

$$\frac{V_1^2}{2} + \frac{p_1}{\rho} + 0 - \frac{dW_s}{dm} = \frac{V_2^2}{2} + \frac{p_2}{\rho} + 0 + (h_\ell) \qquad \text{(a)}$$

$$\frac{dW_s}{dm} = \left(\frac{dW_s}{dt}\right)\left(\frac{dt}{dm}\right) = \frac{(50{,}000)}{\left[V_2 \frac{\pi}{4}(.3^2)(1{,}000)\right]} = \frac{707}{V_2} \qquad \text{(b)}$$

$$h_\ell = f_1\left(\frac{100}{.5}\right)\left(\frac{V_1^2}{2}\right) + f_2\left(\frac{100}{.3}\right)\left(\frac{V_2^2}{2}\right) + .05\,\frac{V_1^2}{2} + K\,\frac{V_1^2}{2} \qquad \text{(c)}$$

Let $f_1 = .023$ , $f_2 = .0258$

$$K = \frac{.5\left[1 - \left(\frac{.3}{.5}\right)^2\right]}{\left(\frac{.3}{.5}\right)^4} = 2.47$$


http://ingesolucionarios.blogspot.com Edu_Zegarr_ch

http://ingesolucionarios.blogspot.com

**(cont.)**

Substitute the above results into Eq. (a) noting that

$$V_1 = \left(\frac{.3}{.5}\right)^2 V_2 = .36V_2$$

$$\frac{(.36V_2)^2}{2} + \frac{p_1}{\rho} - \frac{707}{V_2} = \frac{V_2^2}{2} + (.023)\left(\frac{100}{.5}\right)\left(\frac{[.36V_2]^2}{2}\right) + (.0258)\left(\frac{100}{.3}\right)\left(\frac{V_2^2}{2}\right) \qquad \text{(d)}$$

$$+ \frac{(.05)(.36V_2)^2}{2} + \frac{2.47(.36V_2)^2}{2}$$

Use **Bernoulli** in tank:

$$100g = \frac{p_1}{\rho} + \frac{(.36V_2)^2}{2} + 0$$

Subst. into Eq. (d) and carry out the calculation.

$$100g - \frac{707}{V_2} = 5.26V_2^2$$

$$\therefore\ 5.26V_2^3 - 100gV_2 + 707 = 0$$

Solve by trial and error.

$$V_2 = 13.28\ m/s \qquad V_1 = 4.78\ m/s$$

**At A:**

$$(H_{Hyd})_a = 100 - (.05)\left(\frac{4.78^2}{2g}\right) - (.023)\left(\frac{100}{.5}\right)\left(\frac{4.78^2}{2g}\right) = 94.6\ m$$

After contraction:

$$(H_{Hyd}) = -(2.47)\left(\frac{4.78^2}{2g}\right) + 94.6 = 91.71\ m$$



http://ingesolucionarios.blogspot.com Edu_Zegarr_ch

http://ingesolucionarios.blogspot.com
(cont.)

**At B:**

$$(H_{Hyd})_b = 91.71 - (.0258)\left(\frac{50}{.3}\right)\left(\frac{13.28^2}{2g}\right) = 53.06\ m$$

After turbine ($b'$)

$$(H_{Hyd})_{b'} = 53.06 - \frac{707}{(13.28)(g)} = 47.63\ m$$

**At C:**

$$(H_{Hyd}) = 47.63 - (.0258)\left(\frac{50}{.3}\right)\left(\frac{13.28^2}{2g}\right) = 8.98\ m$$

This just equals the kinetic energy head at exit so solution is self consistent.


http://ingesolucionarios.blogspot.com Edu_Zegarr_ch

http://ingesolucionarios.blogspot.com

8.82

Consider an equiangular triangular duct which is 0.4 m on a side. What diameter circular pipe will yield the same flow characteristics? What size square pipe will do the same?

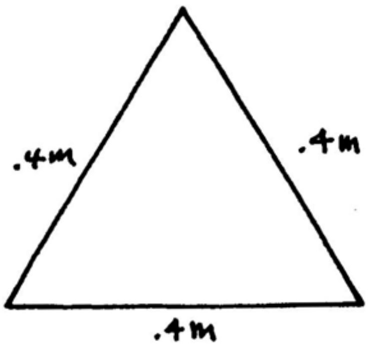


$$D_H = \frac{(4)(A)}{P} = \frac{(4)\left(\frac{1}{2}\right)(.4)(.866)(.4)}{1.2} = .2309\ m$$

$$\therefore\ D_{circular} = \boxed{.2309\ m}$$

For square pipe

$$.2309 = \frac{(4)(L^2)}{4L}$$

$$L = \boxed{.2309\ m}$$

8.83

A trapezoidal duct is transporting 2 ft³/s of kerosene. The roughness $\epsilon$ is 0.0004 ft. What is the drop in pressure in 100 ft of duct? The temperature is 50°F. Use data from Figs. B.1 and B.2 for kerosene.

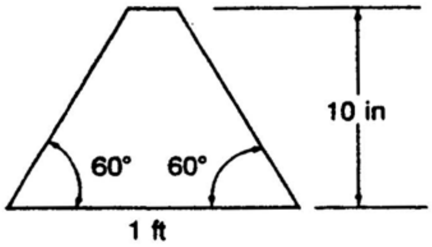


$$\begin{cases} \nu = 3.2\times10^{-5}\ ft^2/s \\ \mu = 5\times10^{-5}\ lb\text{-}s/ft^2 \end{cases}$$

$$\nu = \frac{\mu}{\rho}$$

http://ingesolucionarios.blogspot.com

**(cont.)**

$$\therefore \quad \rho = \frac{\mu}{\nu} = \frac{5\times10^{-5}\ lb\text{-}s/ft^2}{3.2\times10^{-5}\ ft^2/s} = 1.563\ slugs/ft^3$$

$$A = (12)(10)-(2)\left(\frac{1}{2}\right)(10)(10\cot 60^\circ) = 62.26\ in^2$$

$$D_H = \frac{(4)(62.26)}{12+(2)\dfrac{10}{\sin 60^\circ}+[12-(2)(10)\cot 60^\circ]} = \frac{249.1}{35.55} = 7.007\ in$$

$$V = \frac{2}{\left(\dfrac{62.26}{144}\right)} = 4.626\ ft/s$$

$$Re = \frac{(4.626)\left(\dfrac{7.007}{12}\right)}{3.2\times10^{-5}} = 8.44\times10^4$$

$$\frac{e}{D} = \frac{.0004}{\left(\dfrac{7.007}{12}\right)} = 6.85\times10^{-4} \qquad f = .022$$

$$h_t = (.022)\left(\frac{100}{\dfrac{7.007}{12}}\right)\left(\frac{4.626^2}{2}\right) = \boxed{40.31\ \frac{ft\text{-}lb}{slug}}$$

$$\Delta p = (40.31)(1.563) = 63.005\ lb/ft^2 = \boxed{.43753\ psi}$$



http://ingesolucionarios.blogspot.com Edu_Zegarr_ch

8.84 Find **Reynolds** number for circular pipe flow.

Oil of kinematic viscosity $2 \times 10^{-4}$ ft²/s flows through a smooth 3-in circular pipe delivering 0.02 ft³/s flow. What dimension *a* should a smooth square pipe be to deliver the same volume flow and head loss?

$$Re = \frac{\left[\frac{(.02)}{\left(\frac{\pi}{4}\right)\left(\frac{3}{12}\right)^2}\right]\left(\frac{3}{12}\right)}{2\times10^{-4}} = 509.3 \qquad \therefore \ \textit{Laminar flow.}$$

For square conduit of sides of length $a$ *ft*

$$D_H = \frac{(4)(a^2)}{4a} = a \ ft$$

For a flow of .02 *cfs* the velocity of flow should be

$$.02 = (V)(a^2) \qquad V = \frac{.02}{a^2}$$

For **same head loss**

$$(h_f)_{circ} = \frac{128L(.02)(2\times10^{-4})}{\pi\left(\frac{3}{12}\right)^4} = .04172L \ \frac{ft-lb}{slug}$$

$$(h_f)_{square} = f\left(\frac{L}{D_H}\right)\left(\frac{V^2}{2}\right) = f\left(\frac{L}{a}\right)\frac{\left(\frac{.02}{a^2}\right)^2}{2} = \frac{fL}{a^5}(2\times10^{-4})$$

$$\therefore \ .04172L = \frac{fL}{a^5}(2\times10^{-4}) \qquad \frac{f}{a^5} = 208.5$$

From Fig. 9.29 $\qquad f\,Re_H = 56.91$

$$\therefore \ \frac{f\left(\frac{.02}{a^2}\right)(a)}{2\times10^{-4}} = 56.91 \qquad \therefore \ f = .5691a$$

Subst. into Eq. (1) $\qquad \frac{.5691a}{a^5} = 208.6$

$$a = .2285ft = 2.743 \ in$$

http://ingesolucionarios.blogspot.com

8.85 Reynolds number for circular pipe is

Do Problem 9.84 for $q = 2$ ft³/s. Iterate once starting with $a = 0.227$ in.

$$Re = \frac{\dfrac{2}{\left(\frac{\pi}{4}\right)\left(\frac{1}{4}\right)^2}\left(\frac{3}{12}\right)}{2\times10^{-4}} = 50{,}930 = 5.093\times10^4 \qquad \therefore \textit{ Turbulent flow}$$

$$D_h = \frac{4a^2}{4a} = a$$

For $q = 2$ *cfs* the velocity in the square conduit is

$$2 = Va^2 \qquad V = \frac{2}{a^2}$$

For same head loss rate $\qquad (h_f)_{circ} = (h_f)_{square}$

$$f_{circ} = \left(\frac{L}{\left(\frac{1}{4}\right)}\right)\left(\frac{2}{\left(\frac{\pi}{4}\right)\left(\frac{1}{4}\right)^2}\right)^2\left(\frac{1}{2}\right) = f_{square}\,\frac{L}{a}\,\frac{\left(\frac{2}{a^2}\right)^2}{2}$$

$$f_{circ}(3{,}320) = f_{square}\left(\frac{2}{a^5}\right) \qquad f_{circ} \textit{ from Moody} = .021$$

Hence $\qquad (.021)(3{,}320) = f_{square}\left(\dfrac{2}{a^5}\right)$

Try $\qquad a = .227$ *in* $\qquad \therefore\ f_{square} = .0210$

$$V = \frac{2}{(.227)^2} = 38.81$$

$$Re = \frac{(38.81)(.227)}{2\times10^{-4}} = 4.405\times10^4$$

From Moody $\qquad f_{square} = .0217$

$\therefore$ Go back to (1). Solve for new $a$. Hence

$\boxed{a = .228}$ $\qquad$ **Close enough!**



http://ingesolucionarios.blogspot.com Edu_Zegarr_ch

 http://ingesolucionarios.blogspot.com

A fluid having the specific gravity 0.60 and a viscosity of $3.5 \times 10^{-4}$ N-s/m² flows through a circular duct which is 300 mm in diameter. The average speed of the fluid is 15 m/s. The duct is commercial steel. Find the velocity of the fluid 30 mm from the wall. Find the drag on 5 m of the duct.

$$Re = \frac{\rho VD}{\mu} = \frac{(.60)(1{,}000)(15)(.300)}{3.5\times10^{-4}} = 7.71\times10^6$$

$$\frac{e}{D} = \frac{.046}{300} = 1.533\times10^{-4}$$

Go to **Moody**: $f = .013$

$$\tau_w = \frac{f}{4}\frac{\rho V^2}{2} = \frac{.013}{4}(600)\left(\frac{15^2}{2}\right) = 219.4\ Pa$$

$$V_* = \sqrt{\frac{\tau_w}{\rho}} = \sqrt{\frac{219.4}{600}} = .605\ m/s$$

$$\frac{eV_*}{\nu} = \frac{(.046\times10^{-3})(.605)}{\left(\frac{3.5\times10^{-4}}{600}\right)} = 47.69$$

We are in **transition zone.**

$$\ln 47.69 = 3.865$$

From graph: $B = 8.7$

$$\therefore\ \frac{\overline{V_x}}{V_*} = \frac{1}{\alpha}\ln\frac{yV_*}{\nu} + B$$

$$\overline{V_x} = (.605)\left[\left(\frac{1}{.4}\right)\ln\left(\frac{(.03)(.605)}{\frac{3.5\times10^{-4}}{600}}\right) + 8.7\right]$$

$$\overline{V_x} = 20.91\ m/s$$


http://ingesolucionarios.blogspot.com Edu_Zegarr_ch

http://ingesolucionarios.blogspot.com

Consider a smooth 18-in pipe carrying 100 $ft^3/s$ of crude oil with S.G. = 0.86 at a temperature of 50°F. Estimate the thickness $\lambda$ of the viscous sublayer. Use Moody's diagram for $f$.

The formula for $\lambda$ is

$$\lambda \approx \frac{5\nu}{V_*} = \frac{5\nu}{\sqrt{\dfrac{\tau_w}{\nu}}}$$

Note

$$\tau_w = \frac{f}{4}\frac{\rho V^2}{2} \qquad (1)$$

Find $Re$ next.

$$Re = \frac{\dfrac{100}{\frac{\pi}{4}(1.5)^2}(1.5)}{(1.5\times10^{-4})} = 5.659\times10^5$$

From Moody diagram for smooth pipe zone $f = .0130$

$$\therefore \quad V_* = \sqrt{\frac{\tau_w}{\rho}} = \sqrt{\left(\frac{.0130}{4}\right)\left(\frac{\rho}{2}\right)\left[\frac{100}{\frac{\pi}{4}(1.5)^2}\right]^2\left(\frac{1}{\rho}\right)}$$

$$V_* = 2.281 \; m/s$$

$$\therefore \quad \lambda = \frac{(5)(1.50\times10^{-4})}{2.281} = 3.288\times10^{-4} ft$$

$$\boxed{\lambda = .003945 \; in}$$


http://ingesolucionarios.blogspot.com
Edu_Zegarr_ch

8.88 http://ingesolucionarios.blogspot.com

Air is moving in a smooth duct having a diameter of 200 mm at a temperature of 40°C and a pressure of 110,325 Pa abs. If the maximum velocity is 6 m/s, what is the shear stress at the wall using the logarithmic velocity law?

**Find ν**

$$\therefore \begin{cases} \mu = (4.2\times10^{-7})(47.9) = 2.012\times10^{-5}\ \dfrac{N\text{-}s}{m^2} \\ \rho = \dfrac{p}{RT} = \dfrac{110{,}325}{(287)(273+40)} = 1.228\ kg/m^3 \\ \nu = \dfrac{\mu}{\rho} = \dfrac{2.012\times10^{-5}}{1.228} = 1.638\times10^{-5}\ m^2/s \end{cases}$$

$$\frac{\overline{V}_z}{V_*} = 2.5 \ln \frac{yV_*}{\nu} + 5.5$$

Set $y = .100\ m$ so that $\overline{V}_z = (\overline{V}_*)_{max}$

$$\therefore\ \frac{6}{V_*} = 2.5 \ln \frac{(.100)V_*}{1.638\times10^{-5}} + 5.5$$

$$\frac{2.4}{V_*} = \ln\left(\frac{.100}{1.638\times10^{-5}}\right) + \ln V_* + 2.2$$

$$\frac{2.4}{V_*} = 10.92 + \ln V_*$$

Solve by trial and error. $\quad V_* = .2516\ m/s$

But $V_* = \sqrt{\dfrac{\tau_w}{\rho}}$ $\quad \therefore\ \tau_w = (.2516)^2(1.228)$

$$\boxed{\tau_w = .07774\ Pa}$$

http://ingesolucionarios.blogspot.com

8.89

If the volume of air flowing in the previous problem is 0.5 $m^3/s$, find the maximum velocity
(*a*) using the one-seventh law
(*b*) using the logarithmic velocity law
The duct is made of steel.

Find $\overline{V} = \dfrac{Q}{A}$ $\quad \overline{V} = \dfrac{.5}{\left(\frac{\pi}{4}\right)(.200)^2} = 15.92\ m/s$

Find $\nu$

$$\mu = (4.2\times10^{-7})(47.9) = 2.012\times10^{-5}\ \frac{N\text{-}s}{m^2}$$

$$\rho = \frac{p}{RT} = \frac{110{,}325}{(287)(313)} = 1.228\ \frac{kg}{m^3}$$

$$\nu = \frac{\mu}{\rho} = 1.638\times10^{-5}\ \frac{m^2}{s}$$

a) $\dfrac{\overline{V}}{V_{max}} = \left(\dfrac{y}{.100}\right)^{\frac{1}{n}}$ $\quad \overline{V} = \overline{V}_{max}\left(\dfrac{y}{.100}\right)^{\frac{1}{7}}$

From continuity

$$Q = .5 = \int_0^R \overline{V}(2\pi)(R-y)dy$$

$$\therefore\quad .5 = \int_0^R (\overline{V}_{max})\left(\frac{y}{.100}\right)^{\frac{1}{7}}(2\pi)(.100-y)dy = \frac{\overline{V}_{max}}{(.100)^{\frac{1}{7}}}\int_0^{.100}(2\pi)\left(.100y^{\frac{1}{7}} - y^{\frac{8}{7}}\right)dy$$

$$\frac{.3598}{2\pi} = \overline{V}_{max}\left[\frac{.100y^{\frac{8}{7}}}{\frac{8}{7}} - \frac{y^{\frac{15}{7}}}{\frac{15}{7}}\right]_0^{.100} = \overline{V}_{max}[6.297\times10^{-3} - 3.359\times10^{-3}]$$



http://ingesolucionarios.blogspot.com Edu_Zegarr_ch

http://ingesolucionarios.blogspot.com

(cont.)

$$\overline{V}_{max} = 19.49 \; m/s$$

b) $$\frac{e}{D} = \frac{.046}{200} = 2.3\times10^{-4}$$

$$Re = \frac{(15.92)(.200)}{1.638\times10^{-5}} = 1.944\times10^{5} \qquad \therefore \; f = .018$$

$$\therefore \quad \tau_w = \frac{f}{4}\left(\frac{\rho V^2}{2}\right) = \frac{.018}{4}\,\frac{(1.228)(15.92)^2}{2} = .7003 \; Pa$$

$$V_* = \sqrt{\frac{.7003}{1.228}} = .7552 \; m/s$$

$$\left(\frac{eV_*}{\nu}\right) = \left[\frac{(.046)(10^{-3})(.7552)}{1.638\times10^{-5}}\right] = 2.12 \qquad \therefore \; \textit{Smooth pipe zone}$$

$$\frac{\overline{V}_z}{V_*} = 2.5 \ln\frac{yV_*}{\nu} + 5.5$$

$$(\overline{V}_z)_{max} = 1.888 \ln\left[\frac{(.1)(.7552)}{1.638\times10^{-5}}\right] + 4.154$$

$$(\overline{V}_z)_{max} = 20.08 \; m/s$$

http://ingesolucionarios.blogspot.com Edu_Zegarra 

http://ingesolucionarios.blogspot.com

8.90

Do Prob. 8.84 for the case where the roughness $e$ is 0.003 in for both conduits and the flow is 2.0 ft³/s. *Procedure:* Guess at the dimension $a$ of the square section. Get $Re_H$ and then $f$ from Moody. With this $f$, see if you get the same head loss with circular conduit flow. If not, make second guess at $a$, etc. until agreement is reached.

For circular conduit

$$Re = \frac{\dfrac{2}{\left(\dfrac{\pi}{4}\right)\left(\dfrac{1}{4}\right)^2}\left(\dfrac{3}{12}\right)}{2\times10^{-4}} = 5.093\times10^4 \qquad \therefore\ \textit{Turbulent flow}$$

$$D_H = \frac{4a^2}{4a} = a$$

For $q = 2\ cfs$ the velocity in the square conduit is $2 = Va^2 \qquad \therefore\ V = \dfrac{2}{a^2}$

For circular conduits $\dfrac{e}{D} = \dfrac{.003}{3} = .001$

$$h_l = f\left(\frac{L}{D}\right)\left(\frac{V^2}{2}\right) = (.024)\,\frac{L}{\left(\dfrac{1}{4}\right)}\,\frac{\left[\dfrac{2}{\left(\dfrac{\pi}{4}\right)\left(\dfrac{1}{4}\right)^2}\right]^2}{2} = 79.68L$$

For square conduit $\dfrac{e}{D_H} = \dfrac{.003}{a}$

Try $a = 2.6\ in \qquad \dfrac{e}{D_H} = \dfrac{.003}{2.6} = .001154$

$$V = \frac{2}{\left(\dfrac{2.6}{12}\right)^2} = 42.604\ ft/\text{sec} \qquad Re = \frac{(42.604)\left(\dfrac{2.6}{12}\right)}{2\times10^{-4}} = 4.61\times10^4$$

$$\therefore\ f = .025$$



http://ingesolucionarios.blogspot.com
Edu_Zegarr_ch

http://ingesolucionarios.blogspot.com

**(cont.)**

$$\therefore \quad h_\ell = (.025)\left(\frac{L}{\frac{2.6}{12}}\right)\left(\frac{42.604^2}{2}\right) = 104.7L$$

$$\therefore \quad 104.7L \neq 79.68L$$

Try $\qquad a = 2.68\ in \qquad \frac{e}{D_H} = \frac{.003}{2.68} = .00119$

$$V = \frac{2}{\left(\frac{2.68}{12}\right)^2} = 40.10\ ft/\text{sec} \qquad Re = \frac{(40.10)\left(\frac{2.68}{12}\right)}{2\times10^{-4}} = 4.478\times10^4$$

$$\therefore \quad f = .025$$

$$h_\ell = (.025)\frac{L}{\left(\frac{2.68}{12}\right)}\left(\frac{40.10^2}{2}\right) = 90L$$

$$90L \neq 79.68L$$

Try $\qquad a = 2.72\ in \qquad \frac{e}{D} = \frac{.003}{2.72} = .001103$

$$V = \frac{2}{\left(\frac{2.72}{12}\right)^2} = 38.93\ ft/\text{sec} \qquad Re = \frac{(38.93)\left(\frac{2.72}{12}\right)}{2\times10^{-4}} = 4.4\times10^4$$

$$f = .025$$

http://ingesolucionarios.blogspot.com

http://ingesolucionarios.blogspot.com
(cont.)

$$\therefore \quad h_\ell = (.025)\,\frac{L}{\left(\frac{2.72}{12}\right)}\,\frac{38.93^2}{2} = 83.58L$$

$$83.58L \neq 79.67L$$

Try $\qquad a = 2.74\ in \qquad \frac{e}{D} = \frac{.003}{2.74} = .001095$

$$V = \frac{2}{\left(\frac{2.74}{12}\right)^2} = 38.36 \qquad Re = \frac{(38.36)\left(\frac{2.74}{12}\right)}{2\times10^{-4}}\ 4.38\times10^5$$

$$f = .025$$

$$h_\ell = (.205)\,\frac{L}{\left(\frac{2.74}{12}\right)}\,\frac{(38.36)^2}{2} = 80.56L$$

$$\therefore \quad 80.56L \approx 79.68L$$

$$\therefore \quad \boxed{a = 2.74\ in}$$

http://ingesolucionarios.blogspot.com

8.91

In an air-conditioning system there is a length of duct of 200 ft transporting air at 50°F at the rate of 8000 ft³/min. The duct has a cross section of 2 ft by 1 ft and is made of galvanized iron. The pressure at the inlet of the duct is 2 lb/in² gage. What is the pressure drop in millimeters of mercury over the length of the duct, if we hypothesize that the temperature remains very close to 50°F and the pressure varies only slightly along the duct—i.e., we treat the flow as isothermal and incompressible? Consider that the flow is entirely turbulent.

First compute the **hydraulic diameter.**

$$D_H = \frac{(4)(2)(1)}{2[2+1]} = 1.333 \quad ft$$

$$V = \frac{Q}{A} = \frac{\frac{8{,}000}{60}}{2} = 66.7 \quad ft/\text{sec}$$

$$\rho = \frac{p}{RT} = \frac{(14.7+2)(144)}{(53.3)(g)(460+50)} = .00275 \quad \frac{slugs}{ft^3}$$

$$\mu = 3.8\times10^{-7} \quad \frac{lb\text{-sec}}{ft^2}$$

$$Re = \frac{\rho V D_H}{\mu} = \frac{(.00275)(66.7)(1.333)}{3.8\times10^{-7}} = 6.434\times10^5$$

$$\frac{e}{D_H} = \frac{.0005}{1.333} = .000375 \qquad f = .0168$$

Go to **first law.**

$$\frac{V_1^2}{2} + \frac{p_1}{\rho} + gz_1 = \frac{V_2^2}{2} + \frac{p_2}{\rho} + gz_2 + f\left(\frac{L}{D_H}\right)\left(\frac{V^2}{2}\right)$$

$$\frac{p_1}{.00275} = \frac{p_2}{.00275} + (.0168)\left(\frac{200}{1.333}\right)\left(\frac{66.7^2}{2}\right)$$

$$p_1 - p_2 = 15.419 \quad psf$$

$$(\gamma_{Hg})(h) = 15.419$$

$$h = .01817\ ft = \boxed{5.54 \quad mm}$$



http://ingesolucionarios.blogspot.com Edu_Zegarr_ch

http://ingesolucionarios.blogspot.com

8.92

In a heating system, there is a run of insulated duct of 50 m carrying air at a temperature of 35°C at a pressure at the inlet of 100 kPa. The duct has a rectangular cross section of 650 mm by 320 mm. If there is a pressure drop from inlet to outlet of 5 mm of mercury, what is the volumetric flow? *Hint:* For such a small pressure drop in the duct, treat the flow as incompressible. Take $R = 287$ N · m/(kg)(K). The duct is galvanized iron. Consider that the flow is entirely turbulent.

$$D_H = \frac{(4)(.650)(.320)}{2[.650+.320]} = .429 \quad m$$

$$\rho = \frac{p}{RT} = \frac{(100{,}000)}{(287)(273+35)} = 1.1313 \quad \frac{kg}{m^3} \qquad \mu = 2.1\times10^{-5} \quad \frac{kg}{m\cdot s}$$

Now express **first law** for duct.

$$\frac{V_1^2}{2} + gz_1 + \frac{p_1}{\rho} = \frac{V_2^2}{2} + gz_2 + \frac{p_2}{\rho} + f\frac{L}{D_H}\frac{V^2}{2}$$

$$\frac{e}{D_H} = \frac{.15}{429} = .000350$$

Estimate $f$=.016 . Hence

$$\frac{p_1-p_2}{1.1313} = (.016)\left(\frac{50}{.429}\right)\left(\frac{V^2}{2}\right)$$

$$p_1-p_2 = (.005)(13.6)(9{,}806) = 666.81 \qquad \therefore \quad V = 25.1 \quad m/\text{sec}$$

Calculate $Re$ . $\quad Re = \frac{(1.1313)(25.1)(.429)}{2.1\times10^{-5}} = 5.81\times10^5 \qquad \therefore \quad f = .0168$

Recompute $V$ :

$$\frac{p_1-p_2}{1.1313} = (.0168)\left(\frac{50}{.429}\right)\left(\frac{V^2}{2}\right)$$

$$V = 24.54 \quad m/\text{sec}$$

$$q = (V)(A) = (24.54)(.650)(.320) = 5.106 \quad m^3/\text{sec} = 5{,}106 \quad L/\text{sec}$$

http://ingesolucionarios.blogspot.com Edu_Zegarr_ch

http://ingesolucionarios.blogspot.com

A fluid having specific gravity 0.60 and a viscosity of $3.5 \times 10^{-4}$ N-s/m$^2$ flows through a circular duct which is 300 mm in diameter. The average speed of the fluid is 15 m/s. The duct is commercial steel. Find the velocity of the fluid 30 mm from the wall. Find the drag on 5 m of the duct.

$$Re = \frac{\rho V D}{\mu} = \frac{(.60)(1{,}000)(15)(.300)}{3.5\times10^{-4}} = 7.71\times10^{6}$$

$$\frac{e}{D} = \frac{.046}{300} = .00015 \qquad f = .013$$

$$\tau_w = \frac{f}{4}\left(\frac{\rho V^2}{2}\right) = \frac{.013}{4}\,\frac{(1{,}000)(.6)(15^2)}{2} = 219.4\ Pa$$

$$V_* = \sqrt{\frac{219.4}{(1{,}000)(.6)}} = .605\ m/s$$

$$\frac{eV_*}{\nu} = \frac{(.046\times10^{-3})(.605)}{\left(\frac{3.5\times10^{-4}}{600}\right)} = 47.7 \qquad \therefore\ \textit{Transition zone}$$

$$\therefore\ \ln\beta = 3.48$$

$$\therefore\ \frac{\bar{V}_z}{V_*} = \frac{1}{.4}\left[\ln\left(\frac{yV_*}{\nu}\right) - 3.48\right]$$

$$\bar{V}_z = \left(\frac{.605}{.4}\right)\left\{\ln\left[\frac{(.03)(.605)}{\left(\frac{3.5\times10^{-4}}{600}\right)}\right] - 3.48\right]$$

$$\bar{V}_z = \left(\frac{.605}{.4}\right)[10.35 - 3.48 \qquad m/s$$


http://ingesolucionarios.blogspot.com Edu_Zegarr_ch

http://ingesolucionarios.blogspot.com

8.94

Develop a formula for the average velocity $Q/A$ in a turbulent pipe flow. Now relate this average velocity $\bar{V}_{av}$ with the maximum velocity $V_{max}$ in this flow. Show that

$$\bar{V}_{av} = \frac{V_*}{\alpha}\left[\ln\frac{V_* R}{\nu} - \ln\beta - \frac{3}{2}\right]$$

$$\bar{V}_{av} = \frac{Q}{A} = \frac{V_*}{\pi R^2}\int_0^R \frac{1}{\alpha}\left(\ln\frac{yV_*}{\nu} - \ln\beta\right)(2\pi)(R-y)dy = \frac{2V_*}{\alpha R^2}\int_0^R\left(\ln y + \ln\frac{V_*}{\nu} - \ln\beta\right)(R-y)dy$$

$$= \frac{2V_*}{\alpha R^2}\left\{(y\ln y - y)R\Big|_0^R + \int_0^R\left[-y\ln y + \left(\ln\frac{V_*}{\nu} - \ln\beta\right)(R-y)\right]dy\right\}$$

$$= \frac{2V_*}{\alpha R^2}\left\{(y\ln y - y)(R) - y^2\left[\frac{\ln y}{2} - \frac{1}{4}\right] + \left(\ln\frac{V_*}{\nu} - \ln\beta\right)\left(Ry - \frac{y^2}{2}\right)\Big|_0^R\right\}$$

$$= \frac{2V_*}{\alpha R^2}\left\{R^2\ln R - R^2 - R^2\left[\frac{\ln R}{2} - \frac{1}{4}\right] + \left(\ln\frac{V_*}{\nu} - \ln\beta\right)\frac{R^2}{2}\right\}$$

$$= \frac{2V_*}{\alpha}\left\{\frac{\ln R}{2} - \frac{3}{4} + \frac{1}{2}\left(\ln\frac{V_*}{\nu\beta}\right)\right\} = \frac{V_*}{\alpha}\left[\ln R - \frac{3}{2} + \ln\frac{V_*}{\nu\beta}\right]$$

$$\bar{V}_{av} = \frac{V_*}{\alpha}\left[\ln R + \ln\frac{V_*}{\nu\beta} - \frac{3}{2}\right]$$

$$\therefore \quad \boxed{\bar{V}_{av} = \frac{V_*}{\alpha}\left[\ln\frac{V_* R}{\nu} - \ln\beta - \frac{3}{2}\right]}$$

$$\bar{V}_{max} = \bar{V}_{y=R} = \frac{V_*}{\alpha}\left[\ln\frac{RV_*}{\nu} - \ln\beta\right]$$

$$\therefore \quad \boxed{\bar{V}_{av} = \bar{V}_{max} - \frac{3}{2}\frac{V_*}{\alpha}}$$



http://ingesolucionarios.blogspot.com Edu_Zegarr_ch

9.95 For $Re = 100{,}000$

http://ingesolucionarios.blogspot.com

Consider flow of water at 60°C in a smooth 100-mm-diameter pipe. Examine the situations when Re = 100,000 and when Re = 50,000. Compute the friction factor $f$ using Blasius' formula and then compute $f$ using the Prandtl universal law of friction. Finally, look at Moody curves. Compare results.

a) Using Blasius we have

$$f = \frac{.3164}{Re^{\frac{1}{4}}} = \frac{.3164}{(100{,}000)^{\frac{1}{4}}} = \boxed{.01779}$$

b) From Prandtl

$$\frac{1}{\sqrt{f}} = 2.0 \log\left[\underbrace{\frac{\overline{V}_{mean} D}{\nu}}_{Re} \sqrt{f}\right] - .8$$

$$\therefore \quad \frac{1}{\sqrt{f}} = 2.0 \log\left[100{,}000 \sqrt{f}\right] - .8$$

Solve by trial and error.

$$\boxed{f = .01799}$$

c) From Moody $\boxed{f = .0180}$

For $Re = 500{,}000$

a) Blasius

$$f = \frac{.3164}{(50{,}000)^{\frac{1}{4}}} = \boxed{.02116}$$

b) Prandtl

$$\frac{1}{\sqrt{f}} = 2.0 \log\left[50{,}000 \sqrt{f}\right] - .8$$

By trial and error

$$\boxed{f = .0209}$$

c) From Moody

$$\boxed{f = .021}$$



http://ingesolucionarios.blogspot.com Edu_Zegarr_ch

 http://ingesolucionarios.blogspot.com

For Re ≤ 100,000, show that for smooth pipes we can give the pressure drop due to friction as follows:

$$\Delta p = 0.2414 L \mu^{1/4} D^{-4.75} Q^{1.75} \rho^{3/4}$$

Find the pressure drop in a smooth 100-mm pipe for a flow of 0.5 $m^3/s$ over a distance of 50 m. The fluid is water at 30°C.

$$\tau_w = \frac{f}{4}\frac{\rho \overline{V}^2}{2}$$

**But from Blasius,** $$f = \frac{.3164}{Re^{\frac{1}{4}}}$$

**From equilibrium** $$\Delta p\left(\frac{\pi D^2}{4}\right) = \tau_w (\pi D)(L)$$

$$\Delta p = \frac{4\tau_w L}{D}$$

$$\therefore \quad \Delta p = \left(\frac{4L}{D}\right)\left(\frac{.3164}{(Re)^{\frac{1}{4}}}\right)\left(\frac{1}{4}\right)\rho\frac{\overline{V}^2}{2} = \frac{L}{D}\frac{.3164}{\left(\frac{\rho\overline{V}D}{\mu}\right)^{\frac{1}{4}}}\rho\frac{\overline{V}^2}{2}$$

Replace $\overline{V}$ in terms of $Q$ $$\overline{V}\left(\frac{\pi D^2}{4}\right) = Q \qquad \overline{V} = \frac{4Q}{\pi D^2}$$

$$\therefore \quad \Delta p = \frac{L}{D}\rho^{\frac{3}{4}}\overline{V}^{\frac{7}{4}}\mu^{\frac{1}{4}}\frac{(.3164)}{2} = (.1582)\left(\frac{L}{D}\right)\frac{\rho^{\frac{3}{4}}\mu^{\frac{1}{4}}}{D^{\frac{1}{4}}}\left(\frac{4Q}{\pi D^2}\right)^{\frac{7}{4}}$$

$$\Delta p = (.1582)(L)\left(D^{-\frac{19}{4}}\right)\left(\rho^{\frac{3}{4}}\right)\left(\mu^{\frac{1}{4}}\right)\left(\frac{4}{\pi}\right)^{\frac{7}{4}}Q^{\frac{7}{4}}$$

$$\boxed{\Delta p = (.2414)L\mu^{\frac{1}{4}}D^{-4.75}Q^{1.75}\rho^{\frac{3}{4}}}$$

For 50 *m* of 100 *mm* pipe with $Q = .5\ m^3/s$ of water at 30°

$$\Delta p = (.2414)(50)(.801\times10^{-3})^{\frac{1}{4}}(.100)^{-4.75}(.5)^{1.75}(995.7)^{\frac{3}{4}}$$

$$\boxed{\Delta p = 6.017\times10^{6}\ Pa}$$

http://ingesolucionarios.blogspot.com Edu_Zegarr_ch 

 http://ingesolucionarios.blogspot.com

A pump has performance given by the plot in Fig 8.26. If it is pumping 120 L/s of water at 10°C, what is the term $dW_s/dm$ needed for the energy equation using energy per unit mass. What is the power input in kilowatts?

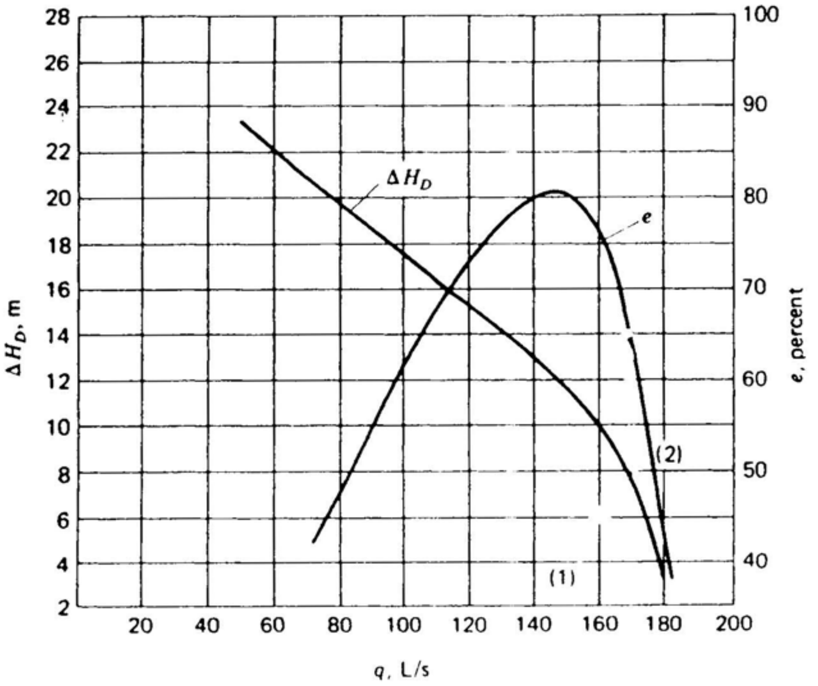


a) From plot we get

$$\Delta H_D = 15.3\ m$$

$$e = 73\%$$

$$\therefore\quad \frac{dW_s}{dm} = g\Delta H_D = \boxed{150.1\quad N\text{-}m/kg}$$

b)
$$\frac{dW_s}{dt} = \frac{1}{.75}\left(\frac{dW_s}{dm}\right)\left(\frac{dm}{dt}\right) = \left(\frac{1}{.73}\right)(150.1)(.120)(997.7)$$

$$\boxed{\frac{dW_s}{dt} = 24.67\ kW}$$


http://ingesolucionarios.blogspot.com Edu_Zegarr_ch

 http://ingesolucionarios.blogspot.com

**Water at a temperature of 20°C flows through an inclined pipe of length 80 m and emerges as a free jet. What is the roughness of the pipe? Neglect losses at entrance to the pipe. The fluid velocity is 2 m/s.**

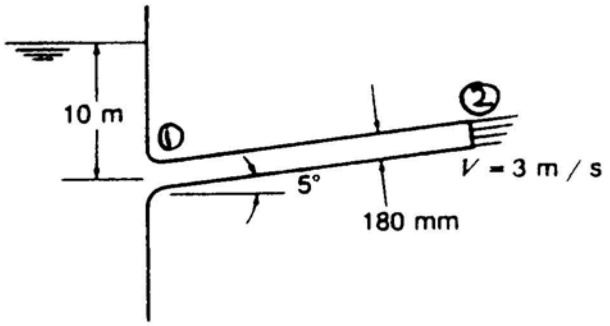


Start with the **modified Bernoulli** Eq. for the pipe. Use gauge pressures.

$$\frac{V^2}{2} + 0 + \frac{p_1}{\rho} = \frac{V^2}{2} + (80)(\sin 5°)(g) + 0 + h_l \tag{1}$$

Now use **Bernoulli** in tank.

$$10g = \frac{V^2}{2} + \frac{p_1}{\rho}$$

$$\frac{p_1}{\rho} = 98.1 - \frac{V^2}{2} \tag{2}$$

Subst. into (1).

$$98.1 - \frac{V^2}{2} = 68.40 + f\left(\frac{80}{.180}\right)\left(\frac{V^2}{2}\right)$$

$$222.2 f V^2 + .5V^2 = 29.70 \tag{3}$$

$$888.8 f = 27.7$$

$$\boxed{f = .031}$$

$$\therefore \quad Re = \frac{(2)(.18)}{1.007\times10^{-6}} = 3.575\times10^5$$

$\therefore$ From Moody $\qquad \dfrac{e}{D} = .0055$

$$\therefore \quad e = (180)(.0055) = \boxed{.99 \ mm}$$


http://ingesolucionarios.blogspot.com Edu_Zegarr_ch

http://ingesolucionarios.blogspot.com

Determine the pipe size needed for a flow of 100 L/s. Use a trial-and-error procedure for different diameters to get the proper $\Delta H_D$ required by the pump. Only try two diameters.

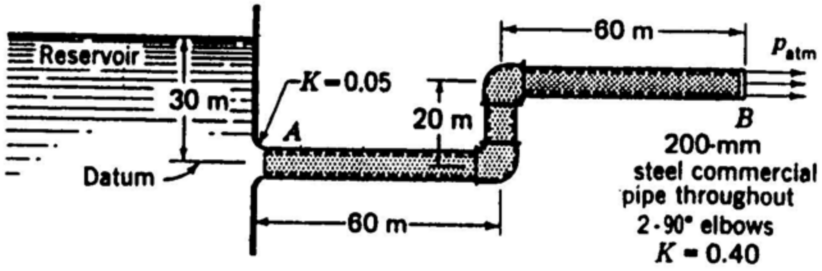


$\nu = .0113 \times 10^{-4}\ m^2/s$
$\rho = 999\ kg/m^3$

Rewrite Eq. (a) of Example 9.5.

$$\frac{V^2}{2} + f\frac{V^2}{2}(700) + .85\frac{V^2}{2} = 10g + 9.81\Delta H_D \tag{1}$$

Then
$$V = \frac{.1}{\frac{\pi}{4}D^2} = \frac{.1273}{D^2} \tag{2}$$

Eq. (1) becomes:
$$\frac{.01499}{D^4} + f\left(\frac{5.672}{D^4}\right) = 98.1 + 9.81\ \Delta H_D$$

Guess at $D$ to be $150\ mm$ $\therefore$ $V = 5.658\ m/s$

$$Re = \frac{(5.658)(.150)}{.0113\times10^{-4}} = 7.51\times10^5$$

$$\frac{e}{D} = \frac{.046}{150} = .00031 \qquad \therefore\ f = .016$$

Go to Eq. (2). Subst. $D$ and $f$. Find $\Delta H_D$

$$\frac{.01499}{(.150)^4} + .016\frac{5.672}{(.150)^4} = 98.1 + 9.81\ \Delta H_D \qquad \therefore\ \Delta H_D = 11.29m$$

Plot point on $\Delta H_D$ vs $q$ grid. (Note $\Delta H_D$ must be $17.6\ m$.)


http://ingesolucionarios.blogspot.com
Edu_Zegarr_ch

http://ingesolucionarios.blogspot.com
(cont.)

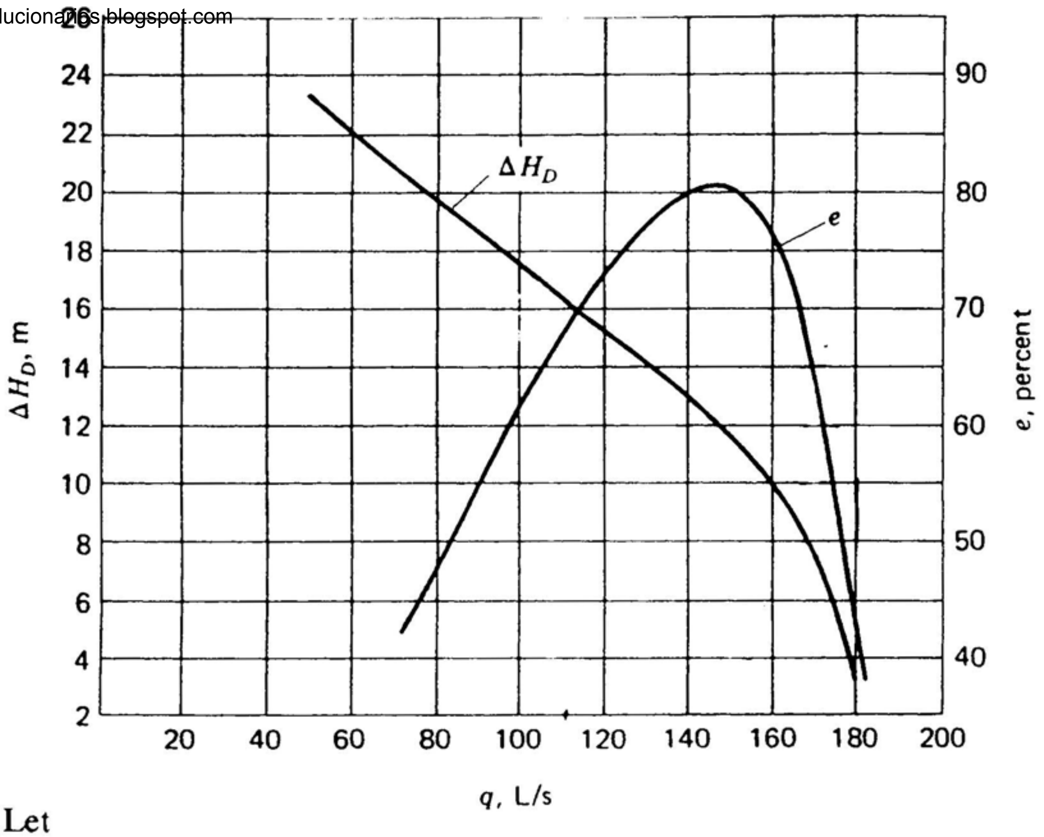


Let

$$D = 140\ mm \qquad V = \frac{.1273}{(.140)^2}\ 6.495\ m/\text{sec}$$

$$Re = \frac{(6.495)(.140)}{.0113\times10^{-4}} = 8.047\times10^5 \qquad \frac{e}{D} = \frac{.046}{140} = .000329$$

$$f = .016$$

Go to Eq. (2)

$$\frac{.01499}{(.140)^4} + .016\,\frac{5.672}{(.140)^4} = 98.1 + 9.81\ \Delta H_D$$

$$\Delta H_D = 18.06\ m$$

∴ Diameter is a bit larger than **140 *mm***. Maybe **141 *mm***.


http://ingesolucionarios.blogspot.com Edu_Zegarr_ch

http://ingesolucionarios.blogspot.com

8.100

Flowing through a pipe of 12-in diameter is 10 $ft^3/s$ of water at 60°F. The pipe is very smooth. Estimate the shear stress $\tau_w$ at the wall and the thickness $\lambda$ of the viscous sublayer. *Hint:* Use Eq. (9.23) for $\tau_w$.

We may use Eq. (9.23) for the shear stress at the wall.

$$\tau_w = (.03325)(1.938)\left(\frac{10}{\frac{\pi 1^2}{4}}\right)^2\left(\frac{1.217\times10^{-5}}{\left(\frac{1}{2}\right)\left(\frac{10}{\frac{\pi 1^2}{4}}\right)}\right)^{\frac{1}{4}} = .388\ psf$$

Now use Eq. (9.59) for the viscous sublayer thickness.

$$\lambda = \frac{5\nu}{V_*} = 5\nu\sqrt{\frac{\rho}{\tau_w}} = (5)(1.217\times10^{-5})\sqrt{\frac{1.938}{.388}} = 1.360\times10^{-4}\ \ ft$$

$$\boxed{\lambda = .001632\ \ in.}$$

8.101

Do Prob. 8.101 for $\tau_w$. Compare your estimation of $\lambda$ with that of the preceding problem where we got $\lambda = 0.001983$ in.

$$V = \left(\frac{10}{\frac{\pi(1^2)}{4}}\right) = 12.73\ \ ft/sec$$

$$Re = \frac{VD}{\nu} = \frac{(12.73)(1)}{1.217\times10^{-5}} = 1.046\times10^6$$

From Moody chart $f = .0118$

$$\therefore\ \ \tau_w = \frac{f}{4}\left(\frac{\rho V^2}{2}\right) = \left(\frac{.0118}{4}\right)\frac{(1.938)(12.73^2)}{2} = .463\ \ psf$$

$$\lambda = \frac{5\nu}{V_*} = (5)(1.217\times10^{-5})\sqrt{\frac{1.938}{.463}} = 1.245\times10^{-4}\ ft = .001494\ in.$$

We get a small thickness here which is off from previous results by

$$\frac{.001632-.001494}{.001632}(100) = 8.5\%$$


http://ingesolucionarios.blogspot.com
Edu_Zegarr_ch

 http://ingesolucionarios.blogspot.com

Flowing through commercial steel pipe of diameter 200 mm are 1600 L/s of water at 10°C. What is the wall friction $\tau_w$? Express the velocity profile as a function of $y$, the radial distance in from the wall. What is the maximum velocity $\bar{V}$? Use the Moody diagram to get $\tau_w$.

$$V_z = \frac{q}{A} = \frac{1{,}600\times10^{-3}}{\left(\frac{\pi}{4}\right)(.200)^2} = 50.9 \quad m/s$$

$$Re = \frac{VD}{\nu} = \frac{(50.9)(.200)}{1.308\times10^{-6}} = 7.79\times10^6$$

$$\frac{e}{D} = \frac{.046}{200} = .000230 \qquad \therefore \; f = .0143$$

$$\tau_w = \left(\frac{f}{4}\right)\left(\frac{\rho V^2}{2}\right) = \left(\frac{.0143}{4}\right)\left[\frac{(1{,}000)(50.9^2)}{2}\right] = 4{,}631 \quad N/m^2$$

Calculate $\rho V_* / \nu$ next.

$$\left(\frac{\rho V_*}{\nu}\right) = \frac{(.046\times10^{-3})\sqrt{\frac{4{,}631}{1{,}000}}}{1.308\times10^{-6}} = 75.7$$

We are in the **rough pipe** zone. From Eq. (9.69)

$$\frac{\bar{V}_z}{V_*} = \frac{1}{\alpha}\ln\left(\frac{y}{e}\right) + 8.5$$

$$\frac{\bar{V}_z}{\left(\frac{4631}{1000}\right)^{1/2}} = \frac{1}{.4}\ln\left(\frac{100}{.046}\right) + 8.5$$

$$\frac{V_z}{2.15} = 27.7$$

$$(\bar{V}_z)_{max} = 59.6 \; m/sec$$


http://ingesolucionarios.blogspot.com Edu_Zegarr_ch

http://ingesolucionarios.blogspot.com

8.103

Gasoline having a specific gravity of 0.68 and a viscosity of $3 \times 10^{-4}$ N · s/m² flows through a 250-mm pipe at an average rate of 10 m/s. What drag is developed per meter of pipe by the gasoline? What is the velocity of the gasoline 25 mm radially in from the pipe wall? The pipe is new cast iron.

$$Re = \frac{VD}{\nu} = \frac{(10)(.250)}{\left[\dfrac{(3\times10^{-4})}{(1{,}000)(.68)}\right]} = 5.67\times10^{6}$$

$$\frac{e}{D} = \frac{.26}{250} = .001 \qquad f = .0198$$

$$\tau_w = \frac{f}{4}\,\frac{\rho V^2}{2} = \frac{.0198}{4}\left[\frac{(1{,}000)(.68)(10^2)}{2}\right] = 168.3 \quad Pa$$

$$Drag = \tau_w(\pi D)(1) = (168.3)(\pi)(.250)(1) = 132.2 \quad N/m$$

Now $eV_*/\nu$

$$\frac{eV_*}{\nu} = \left(\frac{.26\times10^{-3}}{\dfrac{3\times10^{-4}}{680}}\right)\sqrt{\frac{168.3}{(1{,}000)(.68)}} = 293$$

We are in **rough pipe zone**

$$\frac{\overline{V}_z}{V_*} = \frac{1}{.4}\ln\frac{y}{e} + 8.5$$

At $y = .025\ m$ we get:

$$\frac{\overline{V}_z}{\left(\dfrac{168.3}{680}\right)^{1/2}} = \frac{1}{.4}\ln\left(\frac{.025}{.26\times10^{-3}}\right) + 8.5$$

$$\overline{V}_z = 9.90 \ m/\text{sec}$$



http://ingesolucionarios.blogspot.com Edu_Zegarr_ch

Derive Eq. (8.70) using Eq. (8.69). Take $\alpha$ = 0.4.

8.104

$$\overline{V}_x = V_* \ln\frac{y}{e} + 8.5$$

$$\overline{V}_{av} = \frac{1}{\frac{\pi D^4}{4}} \int_0^{D/2} \left( \frac{V_* \ln\left(\frac{y}{e}\right)}{.4} + 8.5 \right) (2\pi) \left(\frac{D}{2} - y\right) dy$$

$$= V_* \frac{2\pi}{\frac{\pi D^2}{4}} \left\{ \left(\frac{D}{2}\right) \int_0^{D/2} \frac{\ln\left(\frac{y}{e}\right)}{.4} \; dy - \int_0^{D/2} \frac{y}{.4} \ln\frac{y}{e}\, dy + \int_0^{D/2} (8.5)\left(\frac{D}{2}\right) dy - \int_0^{D/2} (8.5) y\, dy \right\}$$

$$= \frac{8V_*}{D^2} \left\{ \frac{D}{2} \left[ \int_0^{D/2} \left( \frac{\ln y}{.4} - \frac{\ln e}{.4} \right) dy \right] - \left[ \int_0^{D/2} \frac{y \ln y}{.4} - \frac{y \ln e}{.4}\, dy \right] + \frac{8.5}{2} (D) \left(\frac{D}{2}\right) - \frac{8.5}{2} \left(\frac{D}{2}\right)^2 \right\}$$

$$= \frac{8V_*}{D^2} \left\{ \frac{D}{(.4)2} \left( \frac{D}{2} \ln\frac{D}{2} - \frac{D}{2} - \frac{D}{2} \ln e \right) - \left[ \frac{1}{.4} y^2 \left( \frac{\ln y}{2} - \frac{1}{4} \right) - \frac{y^2}{(2)(.4)} \ln e \right]_0^{D/2} + \frac{8.5 D^2}{8} \right\}$$

$$= 8 \left\{ \frac{V_*}{4} \left( \frac{\ln\frac{D}{2} - 1 - \ln e}{.4} \right) - \frac{V_*}{.4} \left[ \frac{1}{4} \left( \frac{\ln\left(\frac{D}{2}\right)}{2} - \frac{1}{4} \right) - \frac{\left(\frac{1}{2}\right)^2}{2} \ln e \right] + \frac{8.5}{8} V_* \right\}$$

$$= 2 \frac{V_*}{.4} \left( \ln\frac{D}{e} - \ln 2 - 1 \right) - \frac{V_*}{.4} \left( \ln\frac{D}{e} - \frac{1}{2} - \ln 2 \right) = \frac{V_*}{.4} \left[ \ln\frac{D}{e} - \left(\frac{3}{2}\right) - \ln 2 \right] + 8.5 V_*$$

$$\boxed{\overline{V}_{av} = 2.5 V_* \ln\frac{D}{e} + 3.0 V_*}$$

http://ingesolucionarios.blogspot.com

8.105

If 1 ft³/s of water flows into the system at $A$ at a pressure of 100 lb/in² gage, what is the pressure at $B$ if one neglects minor losses? The pipe is commercial steel. Take $\mu = 2.11 \times 10^{-5}$ lb · s/ft².

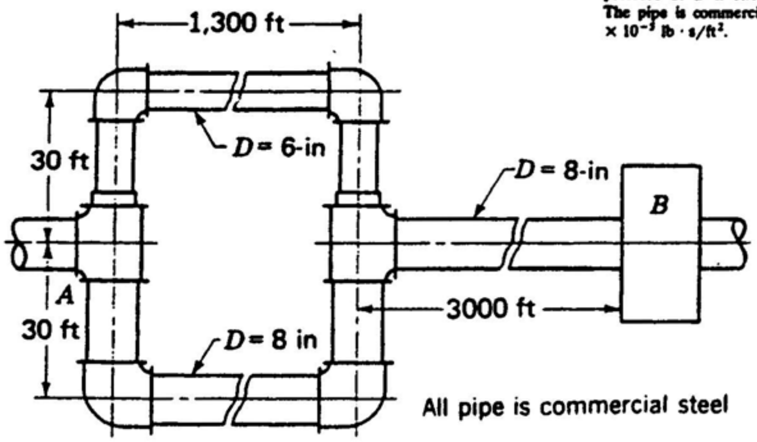


Assume for the upper branch that $q_I' = .4\ cfs$ . Hence:

$$V_I = \frac{.4}{\frac{\pi}{16}} = 2.04 \quad ft/\text{sec}$$

$$(Re)_I = \frac{(1.938)(2.04)\left(\frac{1}{2}\right)}{2.11\times10^{-5}} = 9.37\times10^4 \qquad f_I = .0195$$

The head loss for branch $I$ is then:

$$(h_\ell)_I = (.0195)\left(\frac{1,360}{\frac{1}{2}}\right)\left(\frac{2.04^2}{2}\right) = 110.4 \quad \frac{ft-lb}{slug}$$

**First law** for upper branch. $\qquad \frac{p_1}{\rho} = \frac{p_2}{\rho} + h_\ell$

$$\therefore \quad \frac{p_1 - p_2}{\rho} = 110.4 \qquad \text{(a)}$$

Now compute $q_{II}$ using this head loss. Thus: $\qquad 110.4 = f_{II}\left(\frac{1,360}{.667}\right)\left(\frac{V_{II}^2}{2}\right)$

Now let $f_{II}$=.018 . Solve for $V_{II}$ we get: $\qquad V_{II} = 2.45 \quad ft/\text{sec}$

http://ingesolucionarios.blogspot.com

**(cont.)**

$$(Re)_{II} = \frac{(1.938)(2.45)(.667)}{2.11\times10^{-5}} = 1.501\times10^5 \qquad f_{II} = .0182$$

Guess for $f_{II}$ close enough. $\quad q'_{II} = (2.45)\left[\frac{\pi(.667)^2}{4}\right] = .856 \quad cfs$

Now make a second estimate for the $q's$ .

$$q''_I = \frac{.4}{.4+.856}(1) = .318 \quad cfs \qquad q''_{II} = \frac{.856}{.4+.856}(1) = .682 \quad cfs$$

Hence: $\quad V_I = \frac{.318}{\left(\frac{\pi}{16}\right)} = 1.620 \quad ft/\text{sec}$

$$(Re)_I = \frac{(1.938)(1.620)\left(\frac{1}{2}\right)}{2.11\times10^{-5}} = 7.44\times10^4 \qquad f_I = .0215$$

$$V_{II} = \frac{.686}{\frac{\pi(.667)^2}{4}} = 1.963 \quad ft/\text{sec}$$

$$(Re)_{II} = \frac{(1.938)(1.963)(.667)}{2.11\times10^{-5}} = 1.204\times10^5 \qquad f_{II} = .019$$

Now compute the **head losses** for the branches.

**Branch I** $\quad (h_l)_I = (.0215)\left(\frac{1{,}360}{\frac{1}{2}}\right)\left(\frac{1.620^2}{2}\right) = 76.7$

**Branch II** $\quad (h_l)_{II} = (.019)\left(\frac{1{,}360}{.667}\right)\left(\frac{1.963^2}{2}\right) = 74.6$

Hence: $\quad \left[\frac{p_1 - p_2}{\rho}\right]_I = 76.7 \qquad \left[\frac{p_1 - p_2}{\rho}\right]_{II} = 74.6$



http://ingesolucionarios.blogspot.com Edu_Zegarr_ch

http://ingesolucionarios.blogspot.com

**(cont.)**

This is close enough for our purposes. To get the pressure at $B$ find the head loss through the pipe section III .

$$V_{III} = \frac{1}{\frac{\pi(.667)^2}{4}} = 2.86 \quad ft/sec$$

$$(Re)_{III} = \frac{(1.938)(2.86)(.667)}{2.11\times10^{-5}} = 1.75\times10^5 \qquad f_{II} = .0178$$

$$(h_\ell)_{III} = (.0178)\left(\frac{3{,}000}{.667}\right)\left(\frac{2.86^2}{2}\right) = 327$$

The **total head loss** between A and B is then $(h_\ell)_T = 75 + 327 = 402$

The pressure drop is then $\Delta p = (1.938)(402) = 779 \quad lb/ft^2$

Hence,

$$p_b = 100 - \frac{780}{144} = \boxed{94.6 \; psig}$$

http://ingesolucionarios.blogspot.com

http://ingesolucionarios.blogspot.com

**8.106**

Do Prob. for the case where we have nominal pipe sizes and we have an open globe valve in the 8-in pipe just before reaching the apparatus *B*. The fittings are all screwed fittings. Use *K* for a 6-in standard tee.

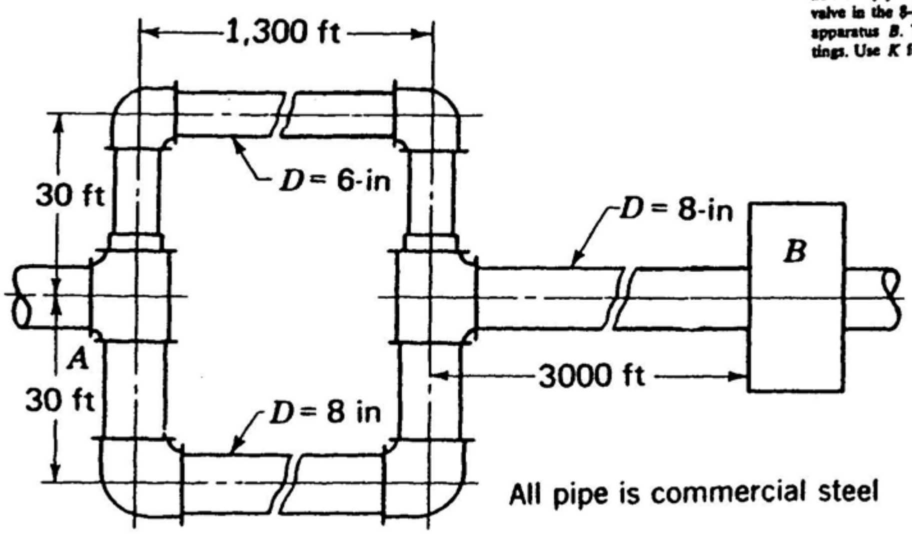


Use the diagram of the previous solution $q_I' = .4\ cfs$ .

$$V_I = \frac{.4}{\frac{28.89}{144}} = 1.994 \quad ft/\text{sec}$$

$$(Re)_I = \frac{(1.938)(1.994)(6.065)}{(2.11\times10^{-5})(12)} = 9.26\times10^4 \qquad f_I = .0198$$

**First law** for **Branch I.**

$$\frac{p_1}{\rho} = \frac{p_2}{\rho} + (.0198)\left(\frac{1,360}{\frac{6.065}{12}}\right)\left(\frac{1.994^2}{2}\right) + [(2)(.30)+(2)(.45)]\ \frac{1.994^2}{2}$$

$$\therefore \quad \frac{p_1 - p_2}{\rho} = 108.9$$

Now compute $q_{II}$ .

$$108.9 = f_{II}\left(\frac{1360}{\frac{7.981}{12}}\right)\left(\frac{V_{II}^2}{2}\right) + [(2)(.30)+(2)(.42)]\ \frac{V_{II}^2}{2}$$

Let $f_{II}$=.018 . We get for $V_{II}$ $\qquad V_{II} = 2.40 \quad ft/\text{sec}$

http://ingesolucionarios.blogspot.com

**(cont.)**

$$(Re)_{II} = \frac{(1.938)(2.40)\left(\frac{7.98}{12}\right)}{2.11\times10^{-5}} = 1.47\times10^{5} \qquad f_{II} = .0182$$

Guess for $f_{II}$ close enough. Hence $\quad q'_{II} = (2.40)\left(\frac{50.03}{144}\right) = .834 \quad cfs$

Now make second guess.

$$q''_{I} = \frac{.4}{.4+.834} = .324 \quad cfs \qquad q''_{II} = \frac{.834}{.4+.834} = .676 \quad cfs$$

Hence

$$V_{I} = \frac{.324}{\left(\frac{28.29}{144}\right)} = 1.649 \quad ft/sec$$

$$(Re)_{I} = \frac{(1.938)(1.649)\left(\frac{6.065}{12}\right)}{2.11\times10^{-5}} = 7.66\times10^{4} \qquad f_{I} = .020$$

For **Branch II**

$$V_{II} = \frac{.676}{\left(\frac{50.03}{144}\right)} = 1.946 \quad ft/sec$$

$$(Re)_{II} = \frac{(1.938)(1.946)\left(\frac{7.981}{12}\right)}{2.11\times10^{-5}} = 1.190\times10^{5} \qquad f_{II} = .019$$

Now use **first law** for each branch.

$$\frac{p_1-p_2}{\rho} = (.020)\,\frac{1360}{\left(\frac{6.065}{12}\right)}\left(\frac{1.649^2}{2}\right) + [(2)(.30)+(2)(.45)]\,\frac{1.649^2}{2} = 75.2$$

$$\frac{p_1-p_2}{\rho} = (.019)\left(\frac{1360}{\frac{7.98}{12}}\right)\left(\frac{1.946^2}{2}\right) + [.6+.84]\left(\frac{1.946^2}{2}\right) = 76.4$$

http://ingesolucionarios.blogspot.com

**(cont.)**

**Close enough! Can stop iteration. Look at the last section of Pipe III.**

$$V_{III} = \frac{2}{\frac{50.03}{144}} = 2.878 \quad ft/sec$$

$$(Re)_{III} = \frac{(1.938)(2.878)\left(\frac{7.981}{12}\right)}{2.11\times10^{-5}} = 1.760\times10^5 \qquad f_{III} = .0178$$

**First law for last section of pipe.**

$$\frac{p_2}{\rho} = \frac{p_3}{\rho} + (.0178)\left(\frac{3{,}000}{\frac{7.981}{12}}\right)\left(\frac{2.878^2}{2}\right) + (4.8)\left(\frac{2.878^2}{2}\right)$$

$$p_3 = p_2 - 683$$

$$p_2 = (100)(144) - (1.938)(108.9) = 14{,}189 \quad psf$$

$$\therefore \quad p_3 = 14{,}189 - 683 = 13{,}506 \quad psf$$

$$\boxed{p_3 = 93.8 \quad psi}$$

http://ingesolucionarios.blogspot.com

http://ingesolucionarios.blogspot.com

8.107

A two-branch pipe system is to deliver 400 L/s of water at 5°C. The pressure at *B* is 20 kPa gage. What is the pressure at *A*? Note the different diameters of the pipes. Neglect minor losses in this problem.

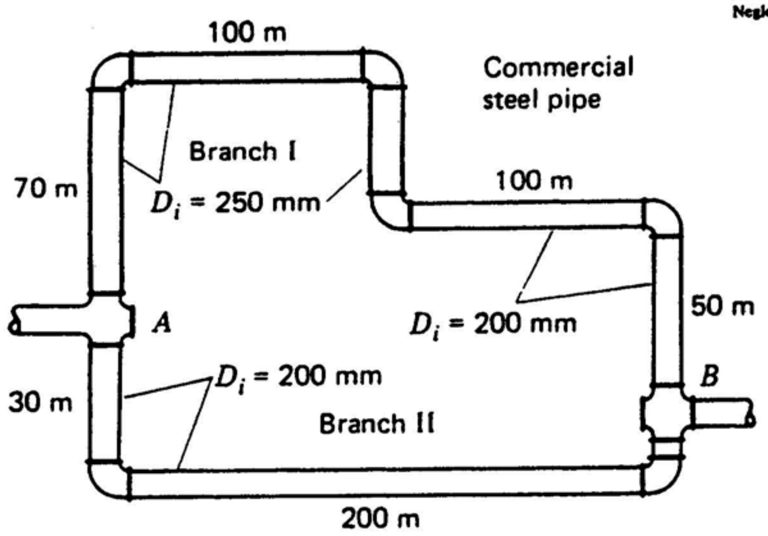


Assume $q_I'$ for Branch I is 200 *L/s*. The head loss is:

$$(h_l)_I = f_1\left(\frac{220}{.25}\right)\left[\frac{\frac{200}{1{,}000}}{\frac{(\pi)(.250^2)}{4}}\right]^2\left(\frac{1}{2}\right) + 2.3\left[\frac{\frac{200}{1{,}000}}{\frac{(\pi)(.250)^2}{4}}\right]^2\left(\frac{1}{2}\right)$$

$$+ f_2\left(\frac{150}{.200}\right)\left[\frac{\frac{200}{1{,}000}}{\frac{(\pi)(.200)^2}{4}}\right]^2\left(\frac{1}{2}\right) + 2.3\left[\frac{\frac{200}{1{,}000}}{\frac{\pi(.150)^2}{4}}\right]^2\left(\frac{1}{2}\right)$$

$$(Re)_1 = \frac{(.2)(.250)}{\left(\frac{\pi}{4}\right)(.250)^2(1.519\times10^{-6})} = 6.7\times10^6$$

$$(Re)_2 = \frac{(.2)(.200)}{\left(\frac{\pi}{4}\right)(.2)^2(1.519\times10^{-6})} = 8.3\times10^5$$

$$\therefore \begin{cases} f_1 = .015 \\ f_2 = .015 \end{cases} \qquad \therefore \quad (h_l)_I = 403$$

**First law** for Branch I.

**(cont.)**

$$\frac{p_A}{\rho} + \frac{V_A^2}{2} = \frac{p_B}{\rho} + \frac{V_B^2}{2} + (h_l)_I \qquad \left(\frac{p_A - p_B}{\rho}\right)_I = \frac{V_B^2}{2} - \frac{V_A^2}{2} + 403$$

$$\left(\frac{p_A - p_B}{\rho}\right)_I = \left[\frac{.200}{\left(\frac{\pi}{4}\right)(.200)^2}\right]^2\left(\frac{1}{2}\right) - \left[\frac{.200}{\left(\frac{\pi}{4}\right)(.250^2)}\right]^2\left(\frac{1}{2}\right) + 403$$

$$\left[\frac{p_A - p_B}{\rho}\right]_I = 415 \quad \frac{N\text{-}m}{kg}$$

Go to **Branch II. First Law**. Choose $f$=.015 and use $[p_A - p_B]_{II}/2 = 415$ from previous calculation. Compute $q'_{II}$ .

$$415 = (.015)\left(\frac{230}{.200}\right)\left(\frac{V_{II}^2}{2}\right) + 3.2\left(\frac{V_{II}^2}{2}\right) \qquad V'_{II} = 6.37 \quad m/s$$

$$\therefore \quad q'_{II} = (6.37)\left(\frac{\pi}{4}\right)(.200)^2(1{,}000) = 200 \quad L/s$$

Now we don't need to get **better** set of $q$'s . We are finished iterating.

$$\frac{p_A - p_B}{\rho} = 415$$

$$p_A = (1{,}000)(415) + 20{,}000 = \boxed{435 \ kPa\,g}$$

http://ingesolucionarios.blogspot.com

8.108

A flow $q$ of 800 L/s goes through the pipe system in Fig. P9.109. What is the pressure drop between $A$ and $B$ if the elevation of $A$ is 100 m and of $B$ is 200 m? Neglect minor losses here. The water is at 5°C.

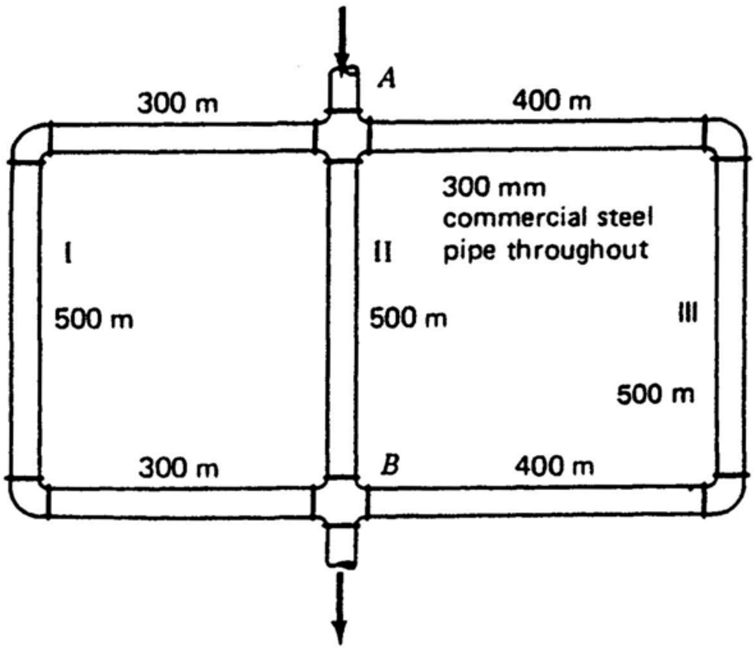


Estimate $q_I' = 250\ L/s$ . **First law** for **Branch I.**

$$V = \frac{.250}{\left(\frac{\pi}{4}\right)(.300^2)} = 3.54\ m/s$$

Hence:
$$\frac{p_A}{\rho} + g(100) = \frac{p_B}{\rho} + g(200) + f\left(\frac{1{,}100}{.3}\right)\left(\frac{3.54^2}{2}\right)$$

Let $f$=.014
$$\frac{p_A - p_B}{\rho} = 1{,}303\ \frac{N-m}{kg}$$

Go to **Branch II** and **Branch III**. Find $q_{II}'$ , $q_{III}'$ using **first law**.

For **Branch II.**

$$\frac{p_A}{\rho} + g(100) = \frac{p_B}{\rho} + g(200) + f\left(\frac{500}{.3}\right)\left(\frac{V^2}{2}\right)$$

Take $f$=.015 . Use $(p_A - p_B)/\rho = 1{,}303$ . Solve for $V$ .

$$(1{,}303) - (9.81)(100) = (.015)\left(\frac{500}{.3}\right)\left(\frac{V^2}{2}\right) \qquad V = 5.075\ \ m/sec$$

For **Branch III.**


http://ingesolucionarios.blogspot.com
Edu_Zegarr_ch

http://ingesolucionarios.blogspot.com
**(cont.)**

$$\frac{p_A}{\rho} + g(100) = \frac{p_B}{\rho} + g(200) + f\left(\frac{1{,}300}{.3}\right)\left(\frac{V^2}{2}\right)$$

Take $f$=.013 . Use $(p_A - p_B)/\rho = 1{,}303$ . Solve for $V$ .

$$1{,}303 - (100)(9.81) = (.013)\left(\frac{1{,}300}{.3}\right)\left(\frac{V^2}{2}\right) \qquad V = 3.38 \quad m/s$$

The new $q$'s are:

$$\begin{cases} q_I' = .250 \quad m^3/s \\ q_{II}' = (5.075)\left(\frac{\pi}{4}\right)(.3)^2 = .3587 \quad m^3/s \\ q_{III}' = (3.38)\left(\frac{\pi}{4}\right)(.3^2) = .2389 \quad m^3/s \end{cases}$$

Find new set of $q$'s.

$$q_I'' = \frac{.250}{.250 + .3587 + .2389}(.8) = .2360 \quad m^3/s$$

$$q_{II}'' = \frac{.3587}{.250 + .3587 + .2389}(.8) = .3386 \quad m^3/s$$

$$q_{III}''' = \frac{.2389}{.250 + .3587 + .2389}(.8) = .2255 \quad m^3/s$$

$\therefore$

$$\begin{cases} V_I'' = \dfrac{.236}{\left(\frac{\pi}{4}\right)(.09)} = 3.339 \quad m/s \\ (Re)_I'' = \dfrac{(3.339)(.3)}{1.519 \times 10^{-6}} = 6.59 \times 10^5 \\ f_I = .0146 \end{cases}$$

http://ingesolucionarios.blogspot.com

**(cont.)**

$$\begin{cases} V''_{II} = \dfrac{.3386}{\dfrac{\pi}{4}(.09)} = 4.79 \quad m/s \\ (R''_{ey})_{II} = \dfrac{(4.794)(.3)}{1.519\times10^{-6}} = 9.46\times10^{5} \\ f_{II} = .0145 \end{cases}$$

$$\begin{cases} V''_{III} = \dfrac{.2255}{\left(\dfrac{\pi}{4}\right)(.09)} = 3.19 \quad m/s \\ (Re)''_{III} = \dfrac{(3.19)(.3)}{1.519\times10^{-6}} = 6.30\times10^{5} \\ f_{III} = .0146 \end{cases}$$

Compute $(p_A - p_B)/\rho$ for each Branch using **first law.**

I) $$\frac{p_A - p_B}{\rho} = g(100) + (.0146)\left(\frac{1{,}100}{.3}\right)\left(\frac{3.339^2}{2}\right) = 1{,}279 \quad N\text{-}m/kg$$

II) $$\frac{p_A - p_B}{\rho} = g(100) + (.0145)\left(\frac{500}{.3}\right)\left(\frac{4.79^2}{2}\right) = 1{,}258 \quad N\text{-}m/kg$$

III) $$\frac{p_A - p_B}{\rho} = g(100) + (.0146)\left(\frac{1{,}300}{.3}\right)\left(\frac{3.19^2}{2}\right) = 1{,}303 \quad N\text{-}m/kg$$

We could go through another cycle. Instead we stop here and take the average of $(p_A - p_B)/\rho = 1{,}280$ .

$$\therefore \quad \frac{p_A - p_B}{\rho} = 1{,}280$$

$$\boxed{(p_A - p_B) = 1{,}280 \quad kPag}$$



http://ingesolucionarios.blogspot.com Edu_Zegarr_ch

8.109

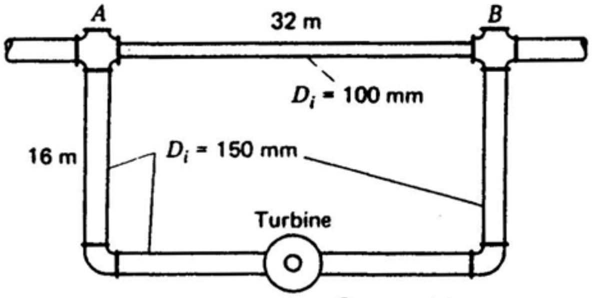


Going into the system of pipes at $A$, we have 200 L/s. In the 150-mm pipe, there is a turbine, as shown in Fig. P9.110. The turbine has performance characteristics as shown in Fig. 8.26. (The head $\Delta H_D$ is now the *decrease* in head rather than the *increase* in head that would be the case for a pump.) The water is at 5°C. What is the power developed by the turbine? *Hint:* Choose a flow $q$ in the lower branch. Read off $\Delta H_D$ for this flow from the performance chart. Now compute $(p_A - p_B)/\rho$ for this branch. Plot a curve of $(p_A - p_B)/\rho$ versus $q$ using about five values of $q$. Now compute for the upper branch $(p_A - p_B)/\rho$ for flows $(0.200 - q)$ for the same set of $q$'s as for the lower branch and again plot $(p_A - p_B)/\rho$ versus $q$. The intersection of the two curves is the operating point. This is another example of *matching systems* described in Example 9.5. Neglect minor losses.

**I. Consider Lower Branch.** Let $q_1 = .08 \quad m^3/s$

$$V_1 = \frac{.08}{\left(\frac{\pi}{4}\right)(.150)^2} = 4.527 \quad m/s \qquad (Re)_1 = \frac{(4.527)(.150)}{1.519\times10^{-6}} = 4.47\times10^5 \qquad f_1 = .0168$$

$$\left[\frac{p_A - p_B}{\rho}\right]_1 = (19.7)(g) + (.0168)\left(\frac{64}{.150}\right)\left(\frac{4.53^2}{2}\right) = 267 \quad \frac{N-m}{kg}$$

$$q_2 = .100 \quad m^3/s \qquad V_2 = 5.659 \quad m/s \qquad (Re)_2 = 5.588\times10^5 \qquad f_2 = .0165$$

$$\left[\frac{p_A - p_B}{\rho}\right]_2 = (17.6)(g) + (.0165)\left(\frac{64}{.150}\right)\left(\frac{5.659^2}{2}\right) = 285 \quad \frac{N-m}{kg}$$

$$q_3 = .120 \quad m^3/s \qquad V_3 = 6.791 \quad m/s \qquad (Re)_3 = 6.705\times10^5 \qquad f_3 = .0160$$

$$\left[\frac{p_A - p_B}{\rho}\right]_3 = (15.3)(g) + (.0160)\left(\frac{64}{.150}\right)\left(\frac{6.791^2}{2}\right) = 308 \quad \frac{N-m}{kg}$$

$$q_4 = .140 \quad m^3/s \qquad V_4 = 7.922 \quad m/s \qquad (Re)_4 = 7.823\times10^5 \qquad f_4 = .016$$

$$\left[\frac{p_A - p_B}{\rho}\right] = (13)(g) + (.016)\left(\frac{64}{.150}\right)\left(\frac{7.922^2}{2}\right) = 341 \quad \frac{N-m}{s}$$

http://ingesolucionarios.blogspot.com

**(cont.)**

Now go to **Upper Branch**. $(.2-q_1) = .120 \quad m^3/s$

$$V_1 = \frac{.120}{\left(\frac{\pi}{4}\right)(.01)} = 15.28 \quad m/s \qquad (Re)_1 = \frac{(15.28)(.1)}{1.519\times10^{-6}} = 1.006\times10^6$$

$$f_1 = .017$$

$$\left[\frac{p_A - p_B}{\rho}\right]_1 = (.017)\left(\frac{32}{.10}\right)\left(\frac{15.28^2}{2}\right) = 635$$

$(.2-q_2) = .100 \qquad V_2 = 12.73 \quad m/s \qquad (Re)_2 = 8.38\times10^5 \qquad f_2 = .0171$

$$\left[\frac{p_A - p_B}{\rho}\right]_2 = .0171\left(\frac{32}{.10}\right)\left(\frac{12.73^2}{2}\right) = 443 \qquad (.2-q_3) = .08$$

$V_3 = 10.19 \quad m/s \qquad (Re)_3 = 6.71\times10^5 \qquad f_3 = .0172$

$$\left[\frac{p_A - p_B}{\rho}\right]_3 = .0172\left(\frac{32}{.10}\right)\left(\frac{10.19^2}{2}\right) = 285 \qquad (.2-q_4) = .06$$

$V_4 = 7.64 \quad m/s \qquad (Re)_4 = 5.03\times10^5 \qquad f_4 = .0174$

$$\left[\frac{p_A - p_B}{\rho}\right] = (.0174)\left(\frac{32}{.10}\right)\left(\frac{7.64^2}{2}\right) = 163$$

Now plot $(p_A - p_B)/\rho$ vs. $q$ .



http://ingesolucionarios.blogspot.com Edu_Zegarr_ch

http://ingesolucionarios.blogspot.com

**(cont.)**

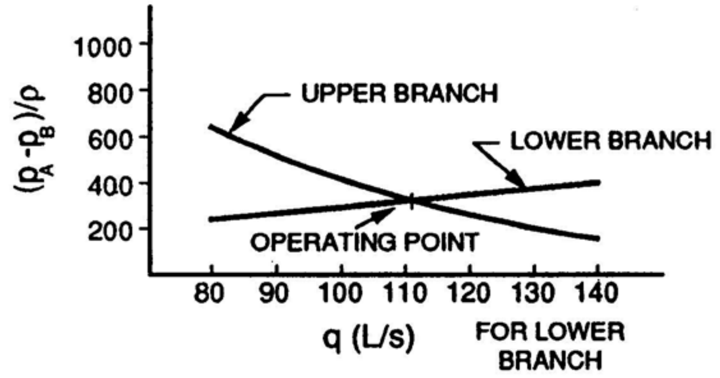


Hence $q$ for lower branch is **116 L/s** and for the upper branch is **84 L/s**. The power generated by the turbine is:

$$Power = \Delta H_D \, g \, \rho \, q \, e = (16.5)(9.81)(1{,}000)(.116)(.72)$$

$$Power = 13.52 \ kW$$



http://ingesolucionarios.blogspot.com Edu_Zegarr_ch

http://ingesolucionarios.blogspot.com

# CHAPTER 9

http://ingesolucionarios.blogspot.com
Edu_Zegarr_ch

http://ingesolucionarios.blogspot.com

9.2

Consider flow of a fluid having the following velocity field:

$$\mathbf{V} = (3y^2x\mathbf{i} + 10yz^2\mathbf{j} + 5\mathbf{k}) \quad \text{m/s}$$

What are the normal stresses at (2, 4, 3) m? The stress $\tau_{xx}$ at this point is known to be $-10$ lb/ft² gage. Take $\mu = 10^{-2}$ lb · s/ft².

Go to Eq. (10.9) for $\tau_{xx}$.

$$\tau_{xx} = \mu\left[(2)(3y^2) - \left(\frac{2}{3}\right)(3y^2+10z^3)\right] - p$$

Let $\tau_{xx} = -10$ at (2,4,3).

$$-(10) = (10^{-2})\left[96 - \left(\frac{2}{3}\right)(48+270)\right] - p$$

$$p = -1.160 + 10 = 8.84 \quad \textit{psf gauge}$$

Now go to Eq. (10.9) for $\tau_{yy}$ and $\tau_{zz}$.

$$\tau_{yy} = 10^{-2}[(2)(10z^3) - 212] - 8.84 = 10^{-2}(540-212) - 8.84 = -.5.56 \quad \textit{psf}$$

$$\tau_{zz} = 10^{-2}[0-212] - 8.84 = -10.96 \quad \textit{psf}$$

$$\therefore \begin{cases} \tau_{xx} = -10 \quad \textit{psf} \\ \tau_{yy} = -5.56 \quad \textit{psf} \\ \tau_{zz} = -10.96 \quad \textit{psf} \end{cases}$$

9.3

Using Navier-Stokes equations, determine the thickness of a film of fluid moving at constant speed and thickness down an infinite inclined wall in terms of volume flow $q$ per unit width. *Hint*: Use the fact that the shear stress is zero at the free surface.

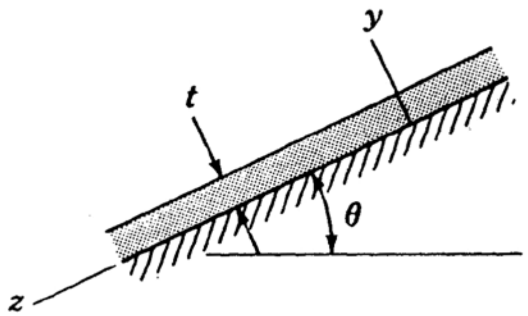


Assume we have 2-D, steady, laminar flow of fluid. The Navier Stokes Eqs. give us in the $z$ direction

$$-\frac{\partial p}{\partial z} = -\mu \frac{\partial^2 V_z}{\partial y^2} - \rho g \sin\theta$$

Separating variables $$\frac{\partial p}{\partial z} = \beta \quad \text{(a)}$$

$$\mu \frac{\partial^2 V_z}{\partial y^2} + \rho g \sin\theta = \beta \quad \text{(b)}$$

Integrate (b):

$$V_z = \frac{1}{\mu}(\beta - \rho g \sin\theta)\frac{y^2}{2} + C_1 y + C_2$$

When $y = 0$, $V_z = 0$, $\therefore C_2 = 0$

When $y = t$, $\frac{dV_z}{dy} = 0$ $\quad \therefore C_1 = -\frac{1}{\mu}(\beta - \rho g \sin\theta)t$

$$\therefore V_z = \frac{1}{\mu}(\beta - \rho g \sin\theta)\left(\frac{y^2}{2} - ty\right)$$

http://ingesolucionarios.blogspot.com

**(cont.)**

To eliminate $t$ :

$$q = \int_0^t \frac{1}{\mu}(\beta - \rho g \sin\theta)\left(\frac{y^2}{2} - ty\right)(dy)(1)$$

$$= \frac{\beta - \rho g \sin\theta}{\mu}\left[\frac{t^3}{6} - \frac{t^3}{3}\right] = \frac{\beta - \rho g \sin\theta}{\mu}\left[-\frac{t^3}{3}\right]$$

$$\therefore \quad t = \left[\frac{3q\mu}{\rho g \sin\theta - \beta}\right]^{\frac{1}{3}}$$

$$V_z = \left(\frac{\beta - \rho g \sin\theta}{\mu}\right)\left[\frac{y^2}{2} - \left(\frac{3q\mu}{\rho g \sin\theta - \beta}\right)^{\frac{1}{3}} y\right]$$

At the free surface, $p$ = const. $\quad \therefore \quad \frac{\partial p}{\partial z} = 0 = \beta$

$$t = \left[\frac{3q\mu}{\rho g \sin\theta}\right]^{\frac{1}{3}}$$

$$\boxed{V_z = \frac{\rho g \sin\theta}{\mu}\left[\left(\frac{3q\mu}{\rho g \sin\theta}\right)^{\frac{1}{3}} y - \frac{y^2}{2}\right]}$$

http://ingesolucionarios.blogspot.com

9.4

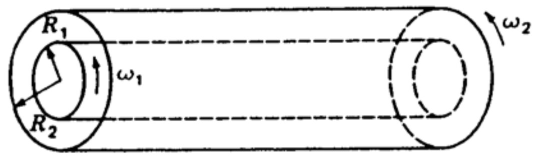


The Navier-Stokes equation for *cylindrical coordinates* are presented for the case of incompressible flow with constant viscosity $\mu$ as follows:

$$\rho\left(\frac{Dv_r}{Dt} - \frac{v_\theta^2}{r}\right) = \rho B_r - \frac{\partial p}{\partial r} + \mu\left(\nabla^2 v_r - \frac{v_r}{r^2} - \frac{2}{r^2}\frac{\partial v_\theta}{\partial \theta}\right)$$

$$\rho\left(\frac{Dv_\theta}{Dt} + \frac{v_r v_\theta}{r}\right) = \rho B_\theta - \frac{\partial p}{r\partial \theta} + \mu\left(\nabla^2 v_\theta + \frac{2}{r^2}\frac{\partial v_r}{\partial \theta} - \frac{v_\theta}{r^2}\right) \qquad (a)$$

$$\rho\frac{Dv_z}{Dt} = \rho B_z - \frac{\partial p}{\partial z} + \mu \nabla^2 v_z$$

Simplify these equations to apply to the rotational flow (only) between two infinite concentric cylinders where the smaller cylinder has angular velocity $\omega_1$ and the outside cylinder has angular velocity $\omega_2$. Use the fact that in cylindrical coordinates

$$\nabla^2 = \frac{1}{r}\frac{\partial r(\partial/\partial r)}{\partial r} - \frac{1}{r^2}\frac{\partial^2}{\partial \theta^2} + \frac{\partial^2}{\partial z^2} \qquad (b)$$

Neglect body force of gravity. Show that we get

$$\frac{\rho v_\theta^2}{r} = \frac{dp}{dr}$$
$$\frac{d^2 v_\theta}{dr^2} + \frac{d}{dr}\left(\frac{v_\theta}{r}\right) = 0 \qquad (c)$$

Note that $V_r = V_z = 0$ and that $V_\theta = V_\theta(r)$ and $p = p(r)$. Going back to Eqs. (a) we get:

$$\begin{cases} -\rho\dfrac{V_\theta^2}{r} = -\dfrac{\partial p}{\partial r} & \text{(a)} \\[2ex] \rho\dfrac{DV_\theta}{Dt} = \mu\left[\nabla^2 V_\theta - \dfrac{V_\theta}{r^2}\right] & \text{(b)} \\[2ex] 0 = 0 & \end{cases}$$

Replace $\nabla^2$ using cylindrical coordinates and, carrying out $DV_\theta/Dt$, we get for (b)

$$\rho\left[V_\theta\frac{\partial V_\theta}{r\partial\theta} + V_r\frac{\partial V_\theta}{\partial r} + V_z\frac{\partial V_\theta}{\partial z}\right] = \mu\left[\frac{1}{r}\frac{\partial r\left(\dfrac{\partial V_\theta}{\partial r}\right)}{\partial r} - \frac{V_\theta}{r^2}\right]$$

$$0 = \mu\left[\frac{1}{r}r\frac{\partial^2 V_\theta}{\partial r^2} + \frac{1}{r}\frac{\partial V_\theta}{\partial r} - \frac{V_\theta}{r^2}\right] \qquad \frac{d^2 V_\theta}{dr^2} + \frac{1}{r}\frac{dV_\theta}{dr} - \frac{V_\theta}{r^2} = 0$$

$$\therefore \quad \frac{d^2 V_\theta}{dr^2} + \frac{d}{dr}\left(\frac{V_\theta}{r}\right) = 0$$

Thus we have

$$\frac{\rho V_\theta^2}{r} = \frac{dp}{dr}$$

$$\frac{d^2 V_\theta}{dr^2} + \frac{d}{dr}\left(\frac{V_\theta}{r}\right) = 0$$

http://ingesolucionarios.blogspot.com Edu_Zegarr_ch

http://ingesolucionarios.blogspot.com

9.5

In Prob. 9.4 find the velocity field for the conditions stated.

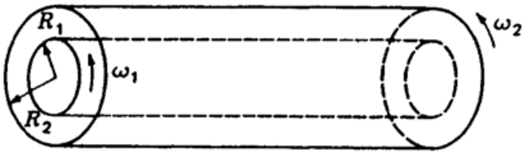


We start with the differential equation for $V_\theta$ .

$$\frac{d^2V_\theta}{dr^2} + \frac{d}{dr}\left(\frac{V_\theta}{r}\right) = 0$$

$$\frac{d}{dr}\left[\frac{dV_\theta}{dr} + \frac{V_\theta}{r}\right] = 0 \qquad \therefore \quad \frac{dV_\theta}{dr} + \frac{V_\theta}{r} = C_1$$

$$\frac{d}{dr}(rV_\theta) = C_1 r$$

This can be written as: $\quad \frac{1}{r}\left[\frac{d}{dr}\, rV_\theta\right] = C_1$

$$\frac{d}{dr}(rV_\theta) = C_1 r \qquad rV_\theta = \frac{C_1 r^2}{2} + C_2 \tag{1}$$

When $\begin{cases} r = R_1 \;, & V_\theta = R_1\omega_1 \\ r = R_2 \;, & V_\theta = R_2\omega_2 \end{cases}$

Hence: $\quad R_1(R_1\omega_1) = \frac{C_1}{2} R_1^2 + C_2$

$$R_2(R_2\omega_2) = \frac{C_1}{2} R_2^2 + C_2 \tag{3}$$

Subtract (3) from (2): $\quad R_1^2\omega_1 - R_2^2\omega_2 = \frac{C_1}{2}(R_1^2 - R_2^2)$

http://ingesolucionarios.blogspot.com

**(cont.)**

$$\therefore \quad C_1 = 2\,\frac{(R_1^2\omega_1 - R_2^2\omega_2)}{R_1^2 - R_2^2}$$

Also we have for $C_2$ :

$$C_2 = R_1^2\omega_1 - \frac{C_1}{2}R_1^2$$

Hence:

$$C_1 = R_1^2\omega_1 - \frac{R_1^2\omega_1 - R_2^2\omega_2}{R_1^2 - R_2^2}(R_1^2)$$

Now going back to Eq. (1) we can say:

$$V_\theta = \left\{ r\left(\frac{R_1^2\omega_1 - R_2^2\omega_2}{R_1^2 - R_2^2}\right) + \frac{R_1^2}{r}\left[\omega_1 - \frac{R_1^2\omega_1 - R_2^2\omega_2}{R_1^2 - R_2^2}\right]\right\}$$

$$V_\theta = \frac{1}{R_1^2 - R_2^2}\left\{ r(R_1^2\omega_1 - R_2^2\omega_2) + \frac{R_1^2}{r}\left[\omega_1(R_1^2 - R_2^2) - R_1^2\omega_1 + R_2^2\omega_2\right]\right\}$$

$$V_\theta = \frac{1}{R_1^2 - R_2^2}\left\{ r(R_1^2\omega_1 - R_2^2\omega_2) + \frac{R_1^2 R_2^2}{r}(\omega_2 - \omega_1)\right\}$$

http://ingesolucionarios.blogspot.com

http://ingesolucionarios.blogspot.com

9.6

As an introduction to *lubrication theory*, consider a slipper block moving with speed $U$ over a bearing surface. With $h \ll L$, the film of oil between the slipper block and bearing surface may be considered *very thin*, so that Eqs. (10.50) apply. Clearly the velocity component $v$ must be much less than $u$ and with $\partial u/\partial x$ of the same order of magnitude as $\partial v/\partial y$, we can drop the second expression of Eq. (10.50*a*). Next, consider the expression

$$\frac{\rho u(\partial u/\partial x)}{\mu(\partial^2 u/\partial y^2)}$$

in dimensionless form so that $u^* = u/U$, $x^* = x/L$, and $y^* = y/h$. If $UL/\nu$ in bearing problems is seldom greater than $2.5 \times 10^4$, indicate why $u(\partial u/\partial x)$ can be deleted in Eq. (10.50*a*) compared with $\nu\, \partial^2 u/\partial y^2$ for $(h/L) < 0.001$. We are then left with the equation

$$\frac{dp}{dx} = \mu \frac{\partial^2 u}{\partial y^2} \qquad (a)$$

for lubrication problems. *Hint*: What are the orders of magnitude of $u^*$, $y^*$, and $x^*$?

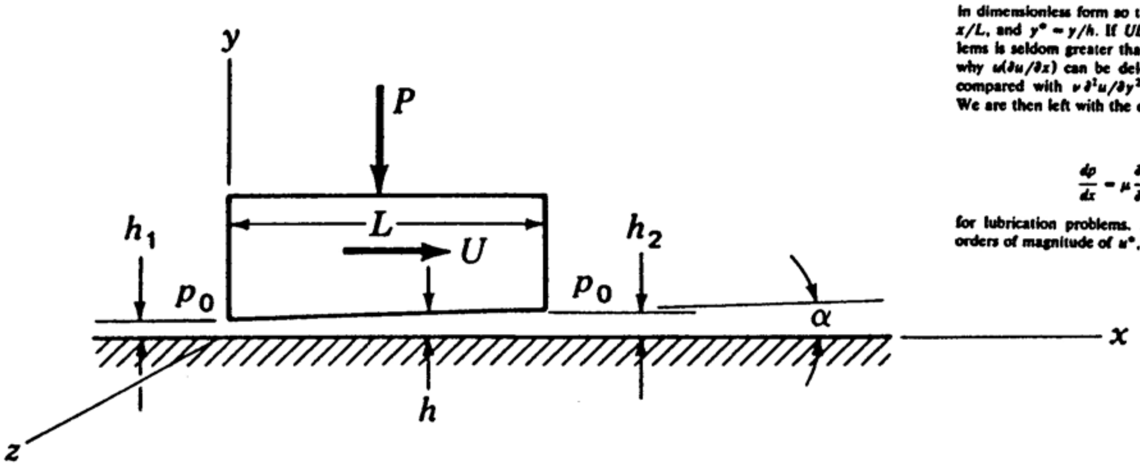


$$\frac{\rho u \dfrac{\partial u}{\partial x}}{\mu \dfrac{\partial^2 u}{\partial y^2}} = \frac{\dfrac{\rho U u^* \, \partial(u^* U)}{\partial(L x^*)}}{\mu \dfrac{\partial^2 u^* U}{\partial y^{*2} h^2}} = \left(\frac{UL}{\nu}\right) \frac{\left(\dfrac{\partial u^*}{\partial x^*}\right)}{\left(\dfrac{\partial^2 u^*}{\partial y^{*2}}\right)} \left(\frac{h^2}{L^2}\right)$$

Now $\quad 0\left[\dfrac{\dfrac{\partial u^*}{\partial x^*}}{\dfrac{\partial^2 u^*}{\partial y^{*2}}}\right] = 0[1]$

$$\therefore \quad \frac{\rho u \dfrac{\partial u}{\partial x}}{\mu \dfrac{\partial^2 u}{\partial y^2}} = 0\left[(2.5\times 10^4)(1)\left(\frac{h}{L}\right)^2\right] < 0(h^2)$$

and is therefore very small so we can neglect $u \dfrac{\partial u}{\partial x}$ compared to $\nu \dfrac{\partial^2 u}{\partial y^2}$

http://ingesolucionarios.blogspot.com

Edu_Zegarr_ch

http://ingesolucionarios.blogspot.com

9.7

In Prob.      take reference *xyz* as fixed to the slipper block and show that the velocity profile is given as

$$u = \frac{1}{2\mu}\frac{dp}{dx}(y^2 - hy) + U\left(\frac{y}{h} - 1\right) \quad (a)$$

Next, show that the volumetric flow $q$ per unit width of the slipper block is

$$q = -\frac{1}{12\mu}\frac{dp}{dx}h^3 - \frac{Uh}{2} \quad (b)$$

Hence, show that

$$\frac{dp}{dx} = -\frac{12\mu}{h^3}\left(\frac{Uh}{2} + q\right) \quad (c)$$

From this, show on integrating from 0 to $L$ that

$$q = -\frac{U}{2}\frac{\int_0^L (dx/h^2)}{\int_0^L (dx/h^3)} = -\left(\frac{h_1 h_2}{h_1 + h_2}\right)U$$

Finally, determine the pressure as a function of $x$ given as

$$p = p_0 + \frac{6\mu UL}{h^2(h_1^2 - h_2^2)}(h - h_2)(h - h_1) \quad (d)$$

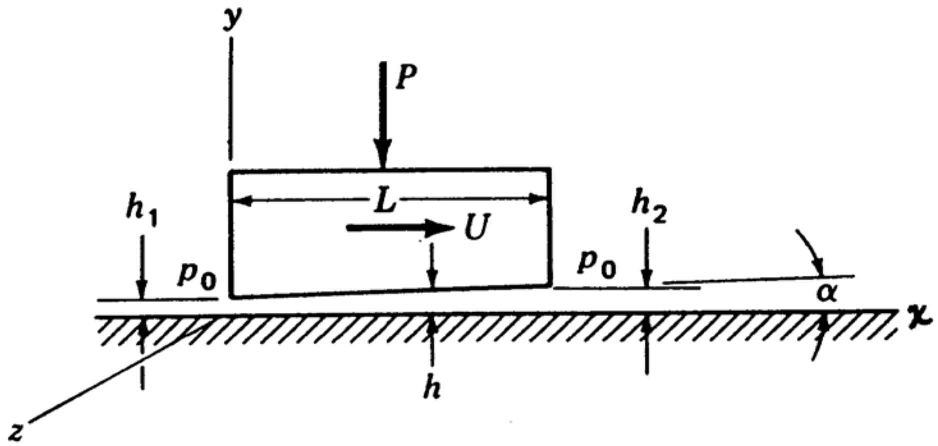


The boundary conditions that must be satisfied for the problem at hand may now be given as follows:

when $\quad x = 0 \quad (y = h_1) \quad ; \quad p = p_0 \qquad$ (a)

$\qquad x = L \quad (y = h_2) \quad ; \quad p = p_0 \qquad$ (b)

$\qquad y = 0 \quad , \quad u = -U \qquad$ (c)

$\qquad y = h \quad , \quad u = 0 \qquad$ (d)

Now considering Eq. (a) in Prob. 10.6, we note that the left side of the equation must be a function of $x$ only and so integrating with respect to $y$ twice and solving for $u$ we get:

$$u = \left[\frac{1}{2\mu}\frac{dp}{dx}\right]y^2 + [f_1(x)]y + f_2(x)$$

where $f_1(x)$ and $f_2(x)$ are to be determined by the boundary conditions. Thus applying Eq. (c) we get:

$$-U = f_2(x)$$

Now going to condition (d) we have:

$$0 = \left[\frac{1}{2\mu}\frac{dp}{dx}\right]h^2 + [f_1(x)]h - U$$

http://ingesolucionarios.blogspot.com

(cont.)

$$f_1(x) = \frac{U}{h} - \frac{1}{2\mu}\left(\frac{dp}{dx}\right)h$$

The velocity component $u$ can then be given as follows:

$$u = \frac{1}{2\mu}\left(\frac{dp}{dx}\right)(y^2 - hy) + U\left(\frac{y}{h} - 1\right) \qquad (1)$$

Thus, we see that the velocity profile is the superposition of a parabolic profile as given by the first expression plus a linear profile as given by the second expression.

We now introduce the volumetric flow rate $q$ by employing **conservation of mass.** Thus for every section we have:

$$q = \int_0^h u\,dy = \int_0^h \left[\frac{1}{2\mu}\left(\frac{dp}{dx}\right)(y^2 - hy) + U\left(\frac{y}{h} - 1\right)\right]dy$$

$$= \frac{1}{2\mu}\left(\frac{dp}{dx}\right)\left(\frac{h^3}{3} - \frac{h^3}{2}\right) + U\left(\frac{h}{2} - h\right) = -\frac{1}{12\mu}\left(\frac{dp}{dx}\right)h^3 - \frac{Uh}{2}$$

Solving for $dp/dx$ we get:

$$\frac{dp}{dx} = -\frac{12\mu}{h^3}q - \frac{12\mu}{h^3}\left(U\frac{h}{2}\right) = -\frac{12\mu}{h^3}\left(\frac{Uh}{2} + q\right) \qquad (2)$$

In order to determine $q$ in terms of $U$, we now employ conditions (a) and (b). Thus, integrating the above equation between $0$ and $L$ we have noting that $p{=}p_0$ at the ends

$$\int_0^L \frac{dp}{dx}dx = 0 = 12\mu\left[\frac{U}{2}\int_0^L \frac{dx}{h^2} + q\int_0^L \frac{dx}{h^3}\right]$$

We can then conclude that:

$$q = -\frac{U}{2}\,\frac{\int_0^L \frac{dx}{h^2}}{\int_0^L \frac{dx}{h^3}} \qquad (3)$$

http://ingesolucionarios.blogspot.com

**(cont.)**

Note that we have for $h$

$$h = h_1 + (h_2 - h_1)\frac{x}{L} \qquad (4)$$

Substituting this function into Eq. (3), we can solve for $q$ as follows:

$$q = -\frac{U}{2}\left\{\frac{\displaystyle\int_0^L \frac{dx}{\left[h_1 - \frac{(h_2-h_1)}{L}x\right]^2}}{\displaystyle\int_0^L \frac{dx}{\left[h_1 - \frac{(h_2-h_1)}{L}x\right]^3}}\right\} = -\left(\frac{h_1 h_2}{h_1 + h_2}\right)U \qquad (5)$$

As for the pressure $p$, we now substitute Eq. (4) and Eq. (5) into Eq. (3) and, after considerable algebraic manipulation, we may arrive at the following result:

$$p = p_0 + \frac{6\mu UL}{h^2(h_1^2 - h_2^2)}(h-h_1)(h-h_2) \qquad (6)$$

http://ingesolucionarios.blogspot.com

9.8

In Probs. 7.6 and 7.7 determine the lifting force $P$ on the slipper block per unit width of the slipper block. Get the following result.

$$P = p_0 L + \frac{6\mu U L^2}{(h_2 - h_1)^2}\left(\ln\frac{h_2}{h_1} - 2\frac{h_2 - h_1}{h_2 + h_1}\right) \quad (a)$$

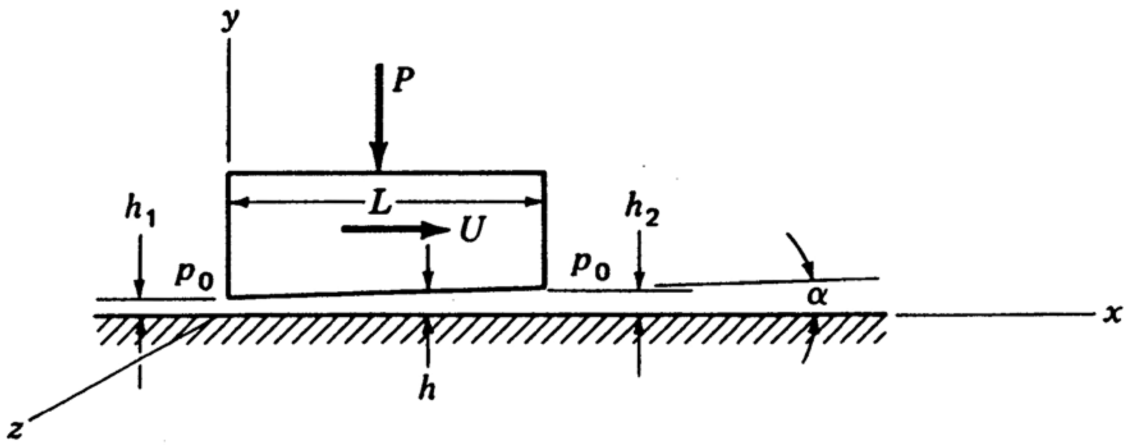


The total load $P$ that the bearing will sustain per unit width is calculated.

$$P = \int_0^L p\,dx = \int_0^L \left[p_0 + \frac{6\mu UL}{h^2(h_1^2 - h_2^2)}(h - h_1)(h - h_2)\right]dx$$

From geometry $\qquad dh = \frac{h_2 - h_1}{L}dx \qquad \therefore \quad dx = \frac{L}{h_2 - h_1}dh$

We then have for Eq. (d) Prob. 10.7

$$P = \int_{h_1}^{h_2} \left\{p_0 + \frac{6\mu UL}{h^2(h_1^2 - h_2^2)}\left[h^2 - h(h_1 + h_2) + h_1 h_2\right]\right\}\frac{L\,dh}{h_2 - h_1}$$

The integration is straightforward and we get:

$$P = p_0 L + \frac{6\mu UL^2}{(h_2 - h_1)^2}\left[\ln\frac{h_2}{h_1} - 2\,\frac{h_2 - h_1}{h_2 + h_1}\right]$$

http://ingesolucionarios.blogspot.com

9.9

A thrust bearing with six fixed shoes is shown. If the shaft rotates at a speed of 6000 r/min, approximately what load can safely be supported by the bearing? Neglect side leakage. The dimension of the shoe and the film of oil is shown. The $\mu$ for the oil is 0.0958 $N \cdot s/m^2$.

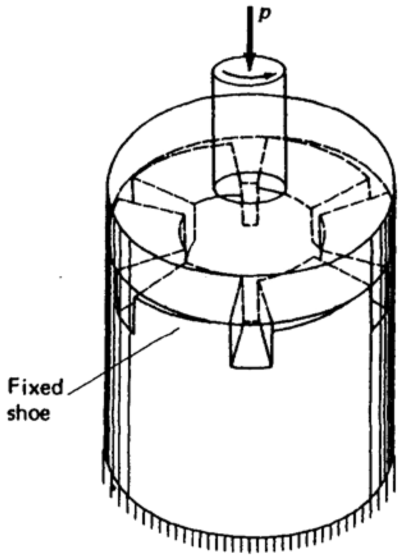


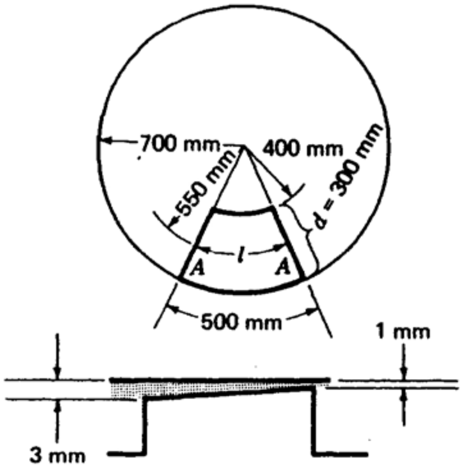


We shall idealize the problem by considering a **rectangular** shoe of length corresponding to centerline ***AA*** which is:

$$\ell = \left(\frac{550}{700}\right)(500) = 393 \quad mm$$

We will furthermore consider that this shoe is moving along a straight line at a speed of $U$ corresponding to the centerline $A\text{-}A$. Thus:

$$U = \omega r = \left[(6{,}000)\left(\frac{2\pi}{60}\right)\right](.55) = 346 \quad m/\text{sec}$$

It is clear that $p_0=0$ for this problem and so we go to Eq. (a) in Prob. 10.8 for $P_s$ for one shoe:

$$P_s = \frac{(6)(\mu)UL^2}{(h_2-h_1)^2}\left[\ln\frac{h_2}{h_1} - 2\,\frac{h_2-h_1}{h_2+h_1}\right]$$

$$= \frac{(6)\left[.0958\,\dfrac{N\text{-sec}}{m^2}\right]\left[346\,\dfrac{m}{\text{sec}}\right](.393\,m)^2}{(3-1)^2\times10^{-6}\;m^2}\left[\ln\frac{3}{1} - 2\,\frac{3-1}{3+1}\right] = 757 \quad kN$$

With six shoes we get:

$$P = 4{,}540 \quad kN$$

http://ingesolucionarios.blogspot.com

# CHAPTER 10

http://ingesolucionarios.blogspot.com
Edu_Zegarr_ch

http://ingesolucionarios.blogspot.com

10.1

The internal energy of a hypothetical perfect gas is given as

$$u = \frac{1}{50}T^{1/2} + 100$$

Determine $c_v$ and $c_p$. Take $R = 50$ ft-lb/(lbm)(°F).

$$u = \frac{1}{50}T^{\frac{1}{2}} + 100 \qquad R = 50 \quad \frac{ft\text{-}lb}{lbm^\circ R}$$

$$R = 50 \quad \frac{ft\text{-}lb}{lbm^\circ R}$$

$$c_v = \frac{du}{dT} = \frac{1}{100}\frac{1}{T^{\frac{1}{2}}} = \frac{10^{-2}}{\sqrt{T}} \quad \frac{BTU}{lbm^\circ R}$$

$$c_p = R + c_v$$

$$c_p = \frac{50}{778} + \frac{10^{-2}}{\sqrt{T}} = .0643 + \frac{10^{-2}}{\sqrt{T}} \quad \frac{BTU}{lbm^\circ R}$$

10.2

Show the validity of Eqs.(10.6a) and (10.6b).

a) $$c_v = \frac{R}{k-1}$$

Start with:

$$c_p - c_v = R \qquad \therefore \quad \frac{c_p}{c_v} - 1 = \frac{R}{c_v}$$

$$k - 1 = \frac{R}{c_v} \qquad c_v = \frac{R}{k-1}$$

b) $$c_p = \frac{k}{k-1}R \qquad c_p - c_v = R$$

$$1 - \frac{c_v}{c_p} = \frac{R}{c_p} \qquad 1 - \frac{1}{k} = \frac{R}{c_p}$$

$$\therefore \quad \boxed{c_p = \frac{k}{k-1}R}$$

http://ingesolucionarios.blogspot.com

10.3

We start with the relation: $$\frac{p_1}{p_2} = \left(\frac{\upsilon_2}{\upsilon_1}\right)^k$$

Using $p\upsilon = RT$ we get $$\left(\frac{T_1}{T_2}\right)\left(\frac{\upsilon_2}{\upsilon_1}\right) = \left(\frac{\upsilon_2}{\upsilon_1}\right)^k$$

$$\therefore \quad \frac{T_1}{T_2} = \left(\frac{\upsilon_2}{\upsilon_1}\right)^{k-1} = \left(\frac{\rho_1}{\rho_2}\right)^{k-1}$$

Using Eq. of state again in the preceding equation:

$$\frac{T_1}{T_2} = \left(\frac{p_1}{p_2}\right)^{k-1}\left(\frac{T_2}{T_1}\right)^{k-1}$$

Hence: $$\left(\frac{T_1}{T_2}\right)^k = \left(\frac{p_1}{p_2}\right)^{k-1}$$

http://ingesolucionarios.blogspot.com Edu_Zegarr_ch

http://ingesolucionarios.blogspot.com

10.4

Air at 15°C and 101,325 Pa is compressed to a pressure of 345,000 Pa absolute. If the compression is adiabatic and reversible, what is the final specific volume? How much work is done per kilogram of the gas?

a)
$$\frac{p_1}{p_2} = \left(\frac{\upsilon_2}{\upsilon_1}\right)^k \qquad \text{(a)}$$

Note that:

$$p = 101{,}325 \quad Pa$$

$$T_1 = 15°C = 288 \ K$$

Using the equation of state we have

$$\upsilon_1 = \frac{(287)(288)}{101{,}325} = .816 \quad m^3/kg$$

Also $p_2 = 345{,}000 \ Pa$ . Now substitute into Eq. (a) to get:

$$\frac{101{,}325}{345{,}000} = \left(\frac{\upsilon_2}{.816}\right)^k$$

$$\upsilon_2 = \left(\frac{101{,}325}{345{,}000}\right)^{\frac{1}{1.4}}(.816) = \ = .340 \quad m^3/kg$$

b)
$$W_k = \int p d\upsilon$$

Since $p\upsilon^k = const.$ we have for $W_k$ :

$$W_k = \int \frac{const.}{\upsilon^k} d\upsilon = (const.)\left(\frac{1}{\upsilon^{k-1}} \frac{1}{1-k}\right)\Bigg|_{\upsilon_1}^{\upsilon_2}$$

$$= (const.)\left(\frac{1}{1-k}\right)\left[\frac{1}{.340^{(.4)}} - \frac{1}{.816^{(.4)}}\right] = -(const.)(2.5)\left(\frac{1}{.65} - \frac{1}{.92}\right)$$

Compute $(const.)$ .

$$const. = (101{,}325)(.816)^k = 76{,}222$$

$$W_k = (-76{,}222)(2.5)(.452) = \boxed{-86{,}130 \ \frac{N-m}{kg}}$$

http://ingesolucionarios.blogspot.com

Do Prob. 10.4 for an isothermal compression.

10.5

a)

$$p_1 \upsilon_1 = p_2 \upsilon_2$$

$$\upsilon_2 = \frac{101{,}325}{345{,}000}(.816) = .24 \quad \frac{m^3}{kg}$$

b)

$$W_k = \int_{\upsilon_1}^{\upsilon_2} p\, d\upsilon = const. \int_{\upsilon_1}^{\upsilon_2} \frac{d\upsilon}{\upsilon} = (const.) \ln \frac{\upsilon_2}{\upsilon_1} = (const.)(-1.22)$$

$$const. = (101{,}325)(.816) = 82{,}680$$

$$W_k = (82{,}680)(-1.22) = \boxed{-100{,}870 \ \frac{N\text{-}m}{kg}}$$

10.6

An airplane is capable of attaining a flight Mach number of 0.8. When it is flying at an altitude of 1000 ft in standard atmosphere, what is the ground speed if the air is not moving relative to the ground? What is the ground speed if the plane is at an altitude of 35,000 ft in standard atmosphere?

$M = .8$ $\quad$ $altitude = 1{,}000\ ft$

At this altitude $c = 1{,}113\ ft/sec$

$$\therefore \quad V = (.8)(1{,}113) = \boxed{890\ ft/sec}$$

At $35{,}000\ ft$ $\quad c = 973\ ft/sec$

$$\therefore \quad V = (.8)(973) = \boxed{778\ ft/sec}$$

10.7

Do the first part of Prob. 10.6 if the air is moving at 60 mi/h directly opposite to the direction of flight.

$$V = 890 - 88 = 802 \quad ft/sec$$

10.8

What is the value of $k$ for standard atmosphere at an altitude of 30,000 ft?

$$c = \sqrt{\frac{kp}{\rho}}$$

$$995 = \sqrt{\frac{(k)(628)}{(.374)(.00238)}}$$

$$k = \frac{(995)^2(.374)(.00238)}{628} = \boxed{1.40}$$

http://ingesolucionarios.blogspot.com

Edu_Zegarr_ch

http://ingesolucionarios.blogspot.com

Suppose that a plane is moving horizontally relative to the ground at a speed of twice the velocity of sound and that the air is moving in the opposite direction at a speed of one-half the velocity of sound relative to the ground. What is the Mach angle?

10.9 Relative to the ground:

$$V_{source} = (2)(340.5) = 681 \quad m/sec$$

$$V_{air} = \frac{1}{2}(340.5) = 170.25 \quad m/sec$$

Velocity of source relative to the air is 851.25 $m/s$ . Hence:

$$M = \frac{851.25}{340.5} = 2.5$$

$$\therefore \quad \sin\alpha = \frac{1}{2.5} = .4$$

$$\boxed{\alpha = 23.6°}$$

Suppose that a cruise missile under test is moving horizontally at M = 2 in the atmosphere at an elevation of 305 m above the earth's surface. How long does it take for an observer on the ground to hear the disturbance from the instant when it is directly overhead? Assume standard atmosphere.

10.10

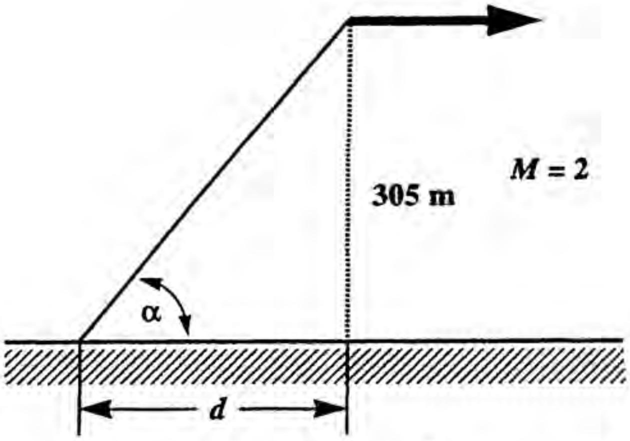


$$\sin\alpha = \frac{1}{2} \qquad \alpha = 30°$$

$$\therefore \quad d = \frac{305}{\tan 30°} = 528.3 \ m$$

Speed of shell is (2)(340) = 680 $m/s$

$$\therefore \quad t = \frac{d}{V} = \frac{528.3}{680} = \boxed{.777 \text{ sec}}$$

10.11

Suppose in Prob. 10.10 that an observer in a plane is moving in the same direction as the missile at a speed of one-half the speed of sound at an elevation of 305 m above the missile. What is the time elapsed between the instant when the missile is directly below and the instant when the observer hears the sound? Neglect changes of c from 305- to 610-m elevation.

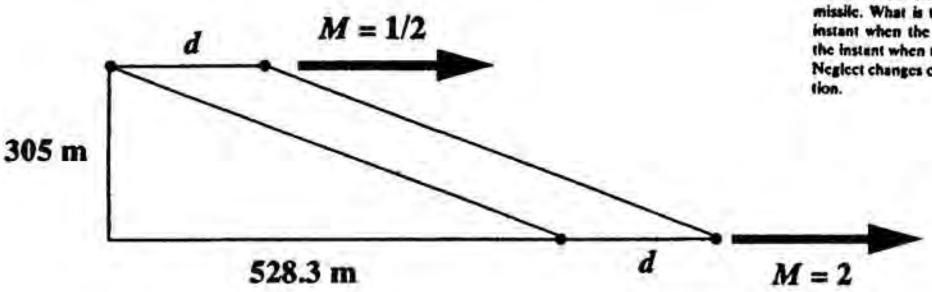


$$680t = 528.3 + \frac{680}{4}t$$

$$\therefore \quad t = \boxed{1.0359 \text{ se}}$$

10.12

What is the velocity of sound for each of the gases in Table B.3 at 60°F in feet per second?

$$c_{AIR} = \sqrt{kRT} = \sqrt{(1.4)(53.3)(g)(460+60)} = 1{,}117.8 \; ft/\text{sec}$$

$$c_{CO} = \sqrt{(1.40)(55.2)(g)(520)} = 1{,}137.5 \; ft/\text{sec}$$

$$c_{He} = \sqrt{(1.66)(386)(g)(520)} = 3{,}275.5 \; ft/\text{sec}$$

$$c_{H_2} = \sqrt{(1.40)(766)(g)(520)} = 4{,}237.5 \; ft/\text{sec}$$

$$c_{N_2} = \sqrt{(1.40)(55.2)(g)(520)} = 1{,}137.5 \; ft/\text{sec}$$

http://ingesolucionarios.blogspot.com

What is the velocity of sound for each of the gases in Table B.3 at 15°C in meters per second?

10.13

$$T = 15°C = 288\ K$$

$$c_{AIR} = \sqrt{kRT} = \sqrt{(1.4)(287)(288)} = 340.2\ m/s$$

$$c_{CO} = \sqrt{(1.4)(297)(288)} = 346\ m/s$$

$$c_{H_e} = \sqrt{(1.67)(2{,}077)(288)} = 999.5\ m/s$$

$$c_{H_2} = \sqrt{(1.4)(4{,}121)(288)} = 1{,}289\ m/s$$

$$c_{N_2} = \sqrt{(1.4)(297)(288)} = 346\ ms$$

http://ingesolucionarios.blogspot.com

Edu_Zegarr_ch

http://ingesolucionarios.blogspot.com

10.14

The inlet velocity of an isentropic diffuser is 305 m/s and the undisturbed pressure and temperature are 34,500 Pa absolute and 235°C, respectively. If the pressure is increased by 30 percent at the exit of the diffuser, determine the exit velocity and temperature. Use tables.

$$V_1 = 305 \quad m/s$$

$$p_1 = 34{,}500 \quad Pa$$

$$T_1 = 508 \quad K$$

$$p_2 = 44{,}850 \quad Pa$$

**Find $M_1$ first.**

$$M_1 = \frac{V_1}{\sqrt{kRT_1}} = \frac{305}{\sqrt{(1.4)(287)(508)}} = .675$$

$$\therefore \quad \frac{p}{p_0} = .737 \qquad p_0 = \frac{34{,}500}{.737} = 46{,}810 \quad Pa$$

$$\frac{p_2}{p_0} = \frac{44{,}850}{46{,}810} = .958$$

$$\therefore \quad M_2 = .249 \qquad \frac{T_2}{T_0} = .988$$

But at section (1) $\quad \frac{T_1}{T_0} = .916 \qquad \therefore \quad T_0 = \frac{508}{.916} = 555$

Hence:

$$T_2 = (555)(.988) = 548 \quad K$$

Also $\quad V_2 = (.249)\sqrt{(1.4)(287)(1)(548)}$

$$\boxed{V_2 = 116.8 \quad m/s}$$

http://ingesolucionarios.blogspot.com

10.15

A rocket has an area ratio $A_{exit}/A^*$ of 3.5 for the nozzle, and the stagnation pressure is $50 \times 10^5$ Pa absolute. Fuel burns at the rate of 45 kg/s and the stagnation temperature is 2870°C. What should the throat area and exit area be? Take $R = 355$ N · m/(kg)(K) and $k = 1.4$.

$$p_0 = 50\times10^5 \quad Pa$$

$$\frac{A_e}{A^*} = 3.5$$

$$T_0 = 3{,}143 \quad K$$

$$w = 45 \quad kg/sec$$

Using tables we get for $A_e/A^* = 3.5$

$$M_2 = 2.80 \qquad \frac{T_2}{T_0} = .389 \qquad \frac{p_2}{p_0} = .037$$

Hence
$$T_2 = (.389)(3{,}143) = 1{,}223 \quad K$$

$$p_2 = (.037)(50\times10^5) = 1.85\times10^5 \quad Pa$$

**Equation of state** gives us:
$$\rho_2 = \frac{1.85\times10^5}{(355)(1{,}223)} = .426 \quad kg/m^3$$

$$V_2 = \sqrt{(1.4)(355)(1{,}223)}\,(2.8) = 2{,}183 \quad m/s$$

Use **continuity** next for $A_2$.
$$A_2 = \frac{45}{(.426)(2{,}183)} = .0484$$

Finally

$$A^* = \frac{.0484}{3.5} = \boxed{.01383 \; m^2}$$

10.16

A missile is moving at Mach number 3 at an altitude of 11,280 m in standard atmosphere. What temperature is the nose of the rocket exposed to if one assumes no detached shocks?

$$M = 3 \qquad altitude = 11{,}280 \quad m$$

At this elevation we have a temperature (see Table B-4) $T$ :

$$T = -55.3°C$$

Imagine an isentropic slow-up from $M=3$ to $M=0$. Then the stagnation temperature is:

$$\frac{T}{T_0} = .357 \qquad \therefore \; T_0 = \frac{217.7}{.357} = 610 \quad K$$

Hence the missile is subject to a temperature $T_0 = 610\ K = 337°C$

http://ingesolucionarios.blogspot.com

10.17

Determine the throat and the exit areas of an ideal rocket motor to give a static thrust of 6670 N at 6100-m altitude standard atmosphere if the chamber pressure is $1.035 \times 10^6$ Pa absolute and chamber temperature is 3315°C. Find the velocity at the throat. Take $k = 1.4$ and $R = 355$ N · m/(kg)(K). Assume that exit pressure is that of surroundings.

$$p_0 = 1.035\times10^6 \quad Pa$$

$$T_0 = 3{,}588 \quad K$$

$$k = 1.4$$

$$R = 355 \quad N\text{-}m/kg\cdot K$$

$$p = 46{,}583 \quad Pa \qquad (see\ Table\ B\text{-}4)$$

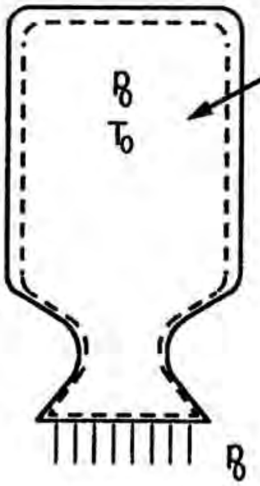


Find exit conditions first. Note: $\dfrac{p_e}{p_0} = \dfrac{46{,}583}{1.035\times10^6} = .045$

Hence: $M_e = 2.67$

Also $\dfrac{T_e}{T_0} = .412$

$$\therefore \quad T_e = (.412)(3{,}588) = 1{,}478 \quad K$$

Hence: $V_e = (2.67)\sqrt{(1.4)(355)(1{,}478)} = 2{,}290 \quad m/sec$

Also from Eq. of state:

$$\rho_e = \frac{46{,}583}{(355)(1{,}478)} = .0888 \quad kg/m^3$$

Now use of **momentum** equation. For steady flow and using gauge pressure we get:

$$6{,}670 = \rho_e V_e^2 A_e$$

$$A_e = \frac{6{,}670}{(.0888)(2{,}290)^2} = .0143 \quad m^2$$

Also $\dfrac{A_e}{A^*} = 3.09 \qquad A^* = \dfrac{.0143}{3.09} = .00463$

Finally we want $V^*$ . For this we need $T^*$ . From tables

$$\frac{T^*}{T_0} = .833 \qquad T^* = (3{,}588)(.833) = 2{,}988 \quad K$$

Hence: $V^* = \sqrt{(1.4)(355)(2{,}988)}$ 

$$\boxed{V^* = 1{,}220 \quad m/sec}$$

http://ingesolucionarios.blogspot.com Edu_Zegarr_ch

http://ingesolucionarios.blogspot.com

10.18

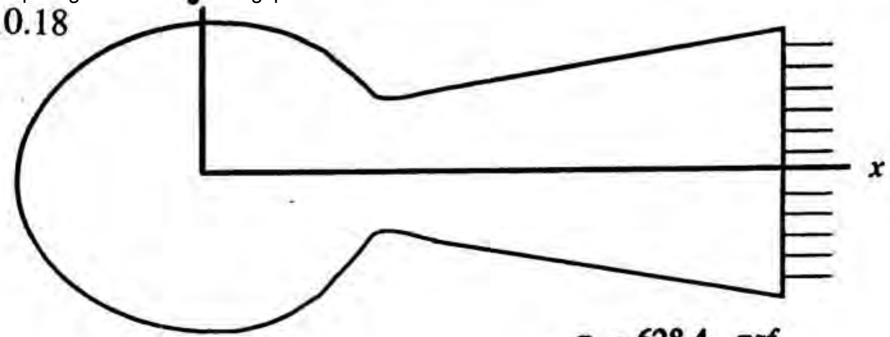


Determine the throat and exit area of an *ideal* rocket motor for flight conditions at 30,000 ft. The chamber pressure is 160 lb/in$^2$ absolute and the temperature is 6000°F. If the mass flow in the engine is 50 lbm/s, what is the thrust of the rocket? Take $k = 1.4$ and $R = 66$ ft · lb/(lbm)(°R).

$$p_e = 628.4 \quad psf$$

$$\therefore \quad \frac{p_e}{p_0} = \frac{\left(\dfrac{628.4}{144}\right)}{160} = .0273$$

$M$=3 from isentropic tables $\qquad \therefore \quad \dfrac{A_e}{A^*} = 4.23 \qquad \dfrac{\rho_e}{\rho_0} = .076$

$$\frac{T_e}{T_0} = .357 \qquad T_e = 2{,}306°\, R$$

**Eq. of state** $\qquad p = \rho RT$

$$\rho_e = \frac{628.4}{(66)(32.2)(2{,}306)} = .0001282 \quad slug/ft^3 = .00413 \quad lbm/ft^3$$

**Continuity** $\qquad \dfrac{50}{g} = (.0001282)(V_e)(A_e)$

$$c = \sqrt{kRT} = [(1.4)(66)(32.2)(2{,}306)]^{\frac{1}{2}} = 2{,}619 \quad ft/\text{sec}$$

$$M = \frac{V}{c} \qquad V = (3)(2{,}619) = 7{,}858 \quad ft/\text{sec}$$

$$A_e = 1.540 \quad ft^2 \qquad A^* = \frac{1.540}{4.23} = .364 \quad ft^2$$

**Momentum**

$$R = (\rho V^2 A)_{exit} = (.0001282)(7{,}858)^2(1.540) = \boxed{12{,}190 \ lb}$$

http://ingesolucionarios.blogspot.com

10.19

$w = 24\ kg/\text{sec}$ $\qquad k = 1.4$

$p_0 = 1.38\times10^6\ Pa$ $\qquad R = 355\ N\text{-}m/kg\cdot K$

$T_0 = 3{,}033\ K$ $\qquad p_e = p_{atm} = 101{,}325\ Pa$

**What static thrust can be expected ideally from a rocket motor burning 25 kg of fuel per second in a test on the ground? The chamber pressure is $1.379 \times 10^6$ Pa absolute, and the chamber temperature is 2760°C. Take $k = 1.4$ and $R = 355$ N · m/(kg)(K) for the products of combustion. What are the exit velocity and the exit temperature of the gases, and what should the exit area be? The exit pressure of the jet is atmospheric pressure?**

To get the thrust we need exit conditions.

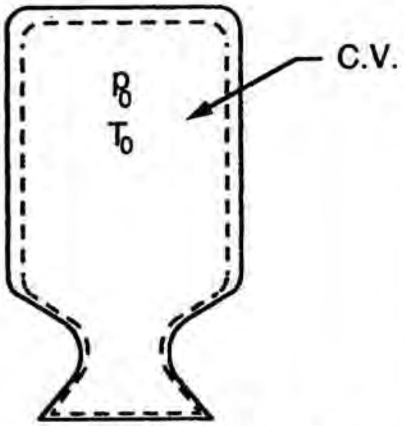


$$\frac{p_e}{p_0} = \frac{101{,}325}{1.379\times10^6} = .0735$$

Hence:

$$M_e = 2.36$$

$$\frac{T_e}{T_0} = .473$$

$$\frac{A_e}{A^*} = 2.32$$

Compute $T_e$ $\qquad T_e = (.473)(3{,}033) = 1{,}435\ K = 1{,}162°C$

For $V_e$ we have: $\qquad V_e = (2.36)\sqrt{(1.4)(355)(1{,}435)} = 1{,}993\ m/\text{sec}$

We now need $\rho_e$. From **Eq. of state** we have:

$$\rho_e = \frac{101{,}325}{(355)(1{,}435)} = .1989\ kg/m^3$$

Now use **continuity** to compute $A_e$.

$$A_e = \frac{25}{(.1989)(1{,}993)} = .063\ m^2$$

Using indicated control volume and gauge pressures we have:

$$T = \rho_e V_e^2 A_e = (.1989)(1{,}993)^2(.063) = \boxed{49{,}770\ N}$$

http://ingesolucionarios.blogspot.com

10.20

An airplane is diving at a speed of 225 m/s and is at an elevation of 3050 m in standard atmosphere. The air-speed indicator which converts the dynamic pressure to a velocity is calibrated for incompressible flow corresponding to conditions at that altitude. What is the percentage of error in the reading given by the indicator?

$$V = 225 \quad m/s \qquad \frac{\rho}{\rho_0} = .7385 \qquad (see\ Table\ B\text{-}4)$$

$$\rho = (.7385)(1.22557) = .90508 \quad kg/m^3 \qquad p = 69{,}665 \quad Pa$$

If flow is considered incompressible, we take $\rho$ as constant equal to $.90508\ \frac{kg}{m^3}$. The **first law of thermo.** becomes:

$$u + \frac{p}{\rho} + \frac{V^2}{2} = u_0 + \frac{p_0}{\rho}$$

We neglect changes in internal energy and we get for $p_0$ :

$$p_0 = 69{,}665 + \frac{V^2}{2}(.90508) \qquad (1)$$

We need actual $p_0$ . Hence consider flow to be compressible. Hence:

$$M = \frac{225}{c}$$

But from Table B-4, $c = 328.6\ m/s$ $\therefore\ M = .685$

Hence from isentropic tables $\frac{p}{p_0} = .731$ $\therefore\ p_0 = \frac{69{,}665}{.731} = 95{,}300\ \ Pa$

Put in $p_0$ from above into Eq. (1).

$$95{,}300 = 69{,}665 + \frac{V^2}{2}(.90508)$$

Solve for $V$ . $V = 238\ \ m/s$

Thus the scale 238 should have been 225 and so we can consider that we get a percent error given as:

$$\%\ error = \frac{238-225}{238}(100) = 5.5\% \qquad \text{on the high side}$$

http://ingesolucionarios.blogspot.com Edu_Zegarr_ch 

http://ingesolucionarios.blogspot.com

10.21

Air is kept in a tank at a pressure of 6.89 × 10⁵ Pa absolute and a temperature of 15°C. If one allows the air to issue out in a one-dimensional isentropic flow, what is the greatest possible flow per unit area? What is the flow per unit area at the exit of the nozzle where $p$ = 101,325 Pa?

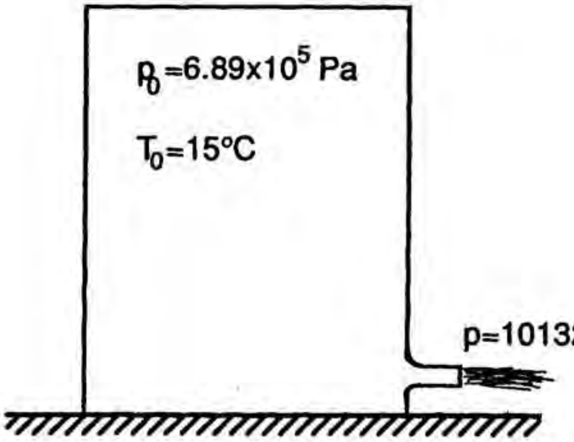


$$\frac{p}{p_0} = \frac{101{,}325}{6.89\times10^5} = .147 \qquad \therefore \quad M_e = 1.91$$

For the largest $G$ we go to the throat. Using Eq. (11.38) we get:

$$G^* = \sqrt{\frac{k}{R}}\,\frac{p_0}{\sqrt{T_0}}\left(\frac{2}{k+1}\right)^{\frac{k+1}{2(k-1)}}$$

$$G^* = \sqrt{\frac{1.4}{(287)}}\left(\frac{6.89\times10^5}{\sqrt{288}}\right)\left(\frac{2}{2.4}\right)^{\frac{2.4}{.8}} = (.0698)(40{,}600)(.58) = 1{,}644 \quad kg/m^2s$$

At the exit we get using Eq. (11.37):

$$G = (.0698)(40{,}600)\,\frac{1.91}{[1+.2(1.91)^2]^3} = (.0698)(40{,}600)\left(\frac{1.91}{5.17}\right) = \boxed{1{,}047 \quad kg/m^2sec}$$

http://ingesolucionarios.blogspot.com

10.22

A nozzle expands air from a pressure $p_0 = 200$ lb/in² absolute and temperature $T_0 = 100°F$ to a pressure of 20 lb/in² absolute. If the mass flow $w$ is 50 lbm/s, what is the throat area and the exit area? Take $k = 1.4$ and $R = 53.3$ ft · lb/(lbm)(°R).

$$\frac{p_e}{p_0} = \frac{20}{200} = .1$$

**From isentropic tables:**

$$\begin{cases} M_e = 2.16 \\ \dfrac{T_e}{T_0} = .517 \qquad \therefore\ T_e = (560)(.517) = 289.5 \quad °R \\ \dfrac{\rho_e}{\rho_0} = .192 \\ \dfrac{A_e}{A^*} = 1.94 \end{cases}$$

**From Eq. of state** $\qquad p\upsilon = RT$

$$\rho_e = \frac{p_e}{RT_e} = \frac{(20)(144)}{(53.3)(32.2)(289.5)} = 5.796\times10^{-3} \quad slug/ft^3$$

$$c_e = \sqrt{kRT_e} = \sqrt{(1.4)(53.3)(g)(289.5)} = 834\ ft/\text{sec}$$

$$V_e = (2.16)(834) = 1{,}801\ ft/\text{sec}$$

**Continuity**

$$\left(\frac{50}{g}\right) = \rho_e V_e A_e = (5.796\times10^{-3})(1{,}801)(A_e)$$

$$A_e = \boxed{.1488\ ft^2}$$

$$A^* = \frac{.1488}{1.94} = \boxed{.0767\ ft^2}$$

http://ingesolucionarios.blogspot.com

10.23

$\eta = .85$ $R = 355 \quad N\text{-}m/kg{\cdot}K$

$c_p = 1{,}214 \quad N\text{-}m/kg{\cdot}K$ $p_e = 46{,}583 \quad Pa$

$p_0 = 1.035\times10^6 \quad Pa$ $k = 1.4$

$T_0 = 3{,}588 \quad K$

Determine the exit area in Prob. 10.17 for a nozzle efficiency of 85 percent. Take $c_p = 1214$ $N \cdot m/(kg)(K)$.

We start with Eq. (11.42)

$$\eta = \frac{\left(\dfrac{V_2^2}{2}\right)_{act}}{c_p(T_1 - T_2)_{isen}}$$

$$\left(\frac{V_2^2}{2}\right)_{act} = (.85)(1{,}214)(3{,}588 - 1{,}478)$$

(see Prob. 11.17 for temperatures).

$$\left(\frac{V_2^2}{2}\right)_{act} = 2.177\times10^6 \qquad (V_2)_{act} = 2{,}087 \quad m/sec$$

Next get $(T_2)_{act}$. Use **first law**.

$$\left(\frac{V_2^2}{2}\right)_{act} = c_p[T_0 - (T_2)_{act}] - \frac{2.177\times10^6}{1{,}214} + 3{,}588 = (T_2)_{act}$$

$$(T_2)_{act} = 3{,}588 - 1{,}793 = 1{,}795 \quad K$$

Hence:
$$(\rho_2)_{act} = \frac{46{,}583}{(355)(1{,}795)} = .07310$$

Finally from **momentum** consideration we get:

$$6{,}670 = (\rho_e V_e^2 A_e)_{act}$$

$$A_e = \frac{6{,}670}{(.07310)(2{,}087)^2} = \boxed{.021 \quad m^2}$$

http://ingesolucionarios.blogspot.com Edu_Zegarr_ch

http://ingesolucionarios.blogspot.com

10.24

A supersonic diffuser, operating ideally, diffuses air from a Mach number of 3 to a Mach number of 1.5. The pressure of the incoming air is 10 lb/in² absolute and the temperature is 20°F. If 280 lbm/s of air flows through the diffuser, determine the inlet and exit areas for the diffuser and the static pressure for the outlet air.

$$M_1 = 3 \qquad M_2 = 1.5$$

$$p_1 = 10 \ psia$$

$$T_1 = 20° F$$

$$w = 280 \ lbm/\text{sec}$$

$$\rho_1 = \frac{p_1}{RT_1} = \frac{(10)(144)}{(53.3)(480)} = .0563 \quad lbm/ft^3$$

Also $$V_1 = (\sqrt{kRT})(M) = \sqrt{(32.2)(1.4)(53.3)(480)}\,(3) = 3{,}220 \quad ft/\text{sec}$$

From continuity: $$A_1 = \frac{280}{(.0563)(3{,}220)} = 1.545 \quad ft^2$$

From tables: $$\frac{A_1}{A^*} = 4.23$$

Hence $$A^* = \frac{1.545}{4.23} = .365 \quad ft^2$$

Also from tables: $$\frac{A_2}{A^*} = 1.18$$

Hence $$A_2 = .431 \ ft^2 \qquad \frac{p_1}{p_0} = .027$$

$$\therefore \quad p_0 = \frac{10}{.027} = 370 \quad psia$$

Also: $$\frac{p_2}{p_0} = .272$$

$$\boxed{p_2 = 100.6 \quad psia}$$



http://ingesolucionarios.blogspot.com Edu_Zegarr_ch

http://ingesolucionarios.blogspot.com

10.25

A De Laval nozzle is connected to a tank containing air at a pressure of 550,000 Pa absolute at a temperature of 25°C. The throat area of the nozzle is 0.0015 $m^2$ and the exit area is 0.0021 $m^2$. What should the *ambient pressure* be if the nozzle is to operate at *design conditions*? What is the *mass flow* if friction is completely neglected? What is the *critical pressure*?

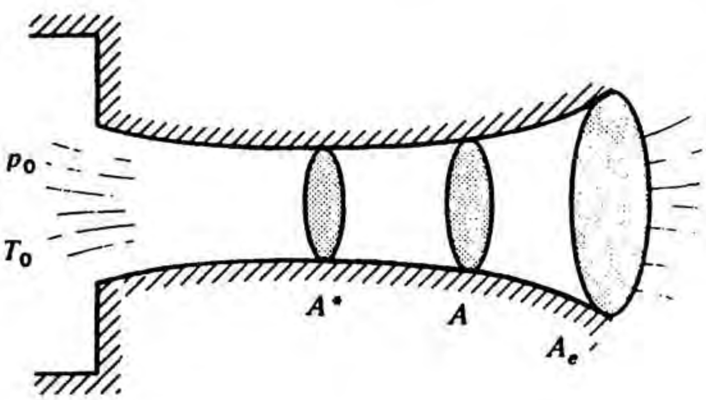


$$\frac{A_e}{A^*} = \frac{.0021}{.0015} = 1.400$$

From **isentropic** tables

$$\boxed{M_e = 1.76}$$

$$\frac{p_e}{p_0} = .185 \qquad \therefore\ p_e = (.185)(550{,}000) = 101{,}750\ Pa$$

$$\therefore\ \boxed{p_e = 101{,}750\ Pa\ abs}$$

$$\frac{T_e}{T_0} = .617 \qquad \therefore\ T_e = (.617)(25 + 273) = 183.87°$$

$$\boxed{T_e = 183.87°\,K}$$

http://ingesolucionarios.blogspot.com

10.26

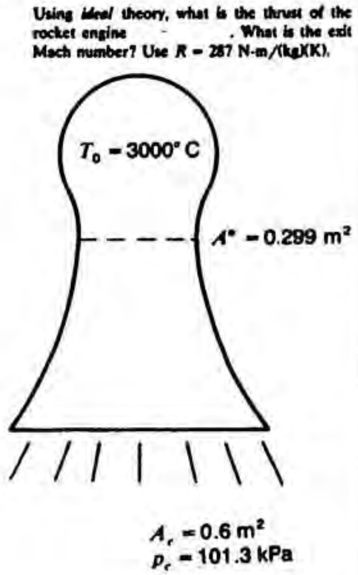


$$\frac{A_e}{A^*} = \frac{.6}{.299} = 2.01$$

**From isentropic tables**

$$\begin{cases} M_e = 2.20 \\ \dfrac{p}{p_0} = .094 \qquad \therefore \quad p_0 = \dfrac{101.3}{.094} = 1{,}078 \ k\ Pa \\ \dfrac{\rho_e}{\rho_0} = .184 \\ \dfrac{T_e}{T_0} = .508 \qquad \therefore \quad T_e = (.508)(3{,}273) = 1{,}663°K \end{cases}$$

$$c_e = \sqrt{kRT_e} = \sqrt{(1.4)(287)(1{,}663)} = 817.4 \ m/s$$

$$V_e = (2.20)(817.4) = 1{,}798.3 \ m/s$$

Use **Eq. of State** for stag. cond.

$$\rho_0 = \frac{p_0}{RT_0} = \frac{1.078 \times 10^6}{(287)(3{,}273)} = 1.148 \ kg/m^3$$

$$\therefore \quad \rho_e = \rho_0(.184) = (1.148)(.184) = .2112 \ kg/m^3$$

**Momentum Eq. for C.V.**

$$T = \rho_e V_e^2 A_e = (.2112)(1{,}798.3)^2(.6)$$

$$\boxed{T = 4.097 \times 10^5 \ N}$$

and

$$\boxed{M_e = 2.20}$$

http://ingesolucionarios.blogspot.com

10.27

A convergent nozzle is operating in the choked condition. The exit area is 0.05 ft². The reservoir temperature is 150°F. The reservoir pressure is varied slowly so that

$$p_0 = 101{,}325 + (1000)t^{1/2}\ \text{Pa}$$

with $t$ in hours. What is the mass flow of air as a function of time? What is the mass flow at $t = 6$ h?

$$G^* = \sqrt{\frac{k}{R}}\,\frac{p_0}{\sqrt{T_0}}\left(\frac{2}{k+1}\right)^{\frac{k+1}{2(k-1)}}$$

$$= \sqrt{\frac{1.4}{(53.3)(g)}}\ \frac{(101{,}325 + 1{,}000t^{\frac{1}{2}})\left(\frac{1}{47.88}\right)}{\sqrt{460 + 150}}\ \left[\frac{2}{1.4 + 1}\right]^{\frac{1.4+1}{2(.4)}}$$

$$= 1.156\times10^{-3}(101{,}325 + 1{,}000t^{\frac{1}{2}})(.01209)$$

$$= 1.398\times10^{-5}(101{,}325 + 1{,}000t^{\frac{1}{2}})$$

$$\therefore\quad w = A^*G^* = (.05)\{(1.398\times10^{-5})(101{,}325 + 1{,}000t^{\frac{1}{2}})$$

$$w = .0708 + 6.99\times10^{-4}t^{\frac{1}{2}}\quad slugs/\text{sec}$$

At $t = 6$ *hrs*

$$\boxed{w = .0724\ slugs/\text{sec}}$$

10.28

Air is drawn from a tank of air having a temperature of 60°C and a pressure of 101.3 kPa absolute through a convergent-divergent nozzle. At one point in the nozzle the static pressure is 40.0 kPa absolute and the cross-sectional area is 0.02 m². What is the mass flow through the nozzle?

$$\begin{cases} p_0 = 101{,}300 \ Pa \\ T_0 = 273 + 60 = 333 \ K \end{cases}$$

From **isentropic tables**

$$\frac{p}{p_0} = \frac{40.0}{101.3} = .395$$

$$\therefore \quad M = 1.233$$

$$\frac{\rho}{\rho_0} = .515$$

$$\frac{T}{T_0} = .767 \qquad \therefore \quad T = (.767)(333) = 255^\circ K$$

**Eq. of State for** $\rho_0$

$$\rho_0 = \frac{p_0}{RT_0} = \frac{101{,}300}{(287)(333)} = 1.060 \ kg/m^3$$

$$\therefore \quad \rho = (.515)(1.060) = .5459 \ kg/m^3$$

$$c = \sqrt{kRT} = \sqrt{(1.4)(287)(256)} = 320.1 \ m/s$$

$$\frac{V}{c} = M = 1.233 \qquad \therefore \quad V = (1.233)(320.1) = 394.7 \ m/s$$

$$w = \rho VA = (.5459)(394.7)(.02) = 4.309 \ kg/s$$

$$\boxed{w = 4.309 \ kg/s}$$

http://ingesolucionarios.blogspot.com

10.29

A blow-down supersonic wind tunnel has a reservoir tank at the entrance having air at $T = 60°F$ and $p = 60$ lb/in² absolute. At the exit the plenum pressure is 5 lb/in² absolute. If in the region between entrance and exit there is a nozzle and the test section is just before the exit and has an area of 0.5 m², what must be the area of the throat for ideal isentropic flow? What is the Mach number at the test section?

$$\begin{cases} p_0 = 60 \ psia \\ T_0 = 520° K \end{cases}$$

$$p_e = 5 \ psia$$

$$\frac{p_e}{p_0} = \frac{5}{60} = .0833$$

**From isentropic tables**

$$\begin{cases} M_e = 2.277 \\ \dfrac{T_e}{T_0} = .491 \\ \dfrac{A_e}{A^*} = 2.146 \end{cases} \qquad \therefore \ A^* = \frac{.5}{2.146} = .233 \ m^2$$

$\therefore$ **Area of Throat = .233 $m^2$**

10.30

A convergent-divergent nozzle is attached to a reservoir where the temperature is 70°C and the pressure is $5 \times 10^5$ Pa absolute. If the exhaust pressure is at ambient pressure of $3 \times 10^5$ Pa absolute, what is the exhaust temperature?

$$T = 70° C \qquad p = 5 \times 10^5 \ Pa$$

$$p_0 = 5 \times 10^5 \ Pa \qquad T_0 = 273 + 70 = 343° C$$

$$\frac{p_e}{p_0} = \frac{3 \times 10^5}{5 \times 10^5} = .6$$

$$\therefore \ \frac{T_e}{T_0} = .8635$$

$$T_e = (343)(.8635) = 296.2$$

$$T_e = 296.2 - 273 = \boxed{23.2° C}$$

http://ingesolucionarios.blogspot.com

10.31

**From Eq. show that as $M_1 \to \infty$ we get a limiting minimum Mach number $M_2$. What is this Mach number for air?**

$$M_2^2 = \frac{\frac{2}{1-k} - M_1^2}{1 + \left(\frac{2k}{1-k}\right)M_1^2}$$

As $M_1 \to \infty$, we have

$$(M_2^2) \to \frac{-M_1^2}{\frac{2k}{1-k}M_1^2} = \frac{-1}{\frac{2k}{1-k}}$$

$$\therefore \quad (M_2^2)_{MIN} = \frac{k-1}{2k}$$

For air

$$(M_2^2)_{MIN} = \frac{1.4 - 1}{2.8} = .1429$$

$$\boxed{(M_2)_{MIN} = .3780}$$

http://ingesolucionarios.blogspot.com

10.32

Water is flowing in a channel at a uniform speed of 6 m/s. At a depth 3 m from the free surface determine (a) stagnation pressure, (b) undisturbed pressure, (c) dynamic pressure, and (d) geometric pressure. Take the flow as incompressible and frictionless.

a) **Stagnation Pressure:**

Using the **first law of thermo.** we have: $$\frac{V^2}{2} + \frac{p}{\rho} = \frac{p_0}{\rho}$$

$$\frac{p_0}{\rho} = 18 + \frac{3\gamma}{\rho}$$

$$p_0 = (1{,}000)(18+29.42) = 47{,}420 \ Pa$$

b) **Undisturbed Pressure:** $p = \gamma z = 29{,}420 \ Pa$

c) **Dynamic Pressure:** $p_d = 47{,}420 - 29{,}420 = 18{,}000 \ Pa$

d) **Geometric Pressure:** Same as (b) in this case.

$$p_g = 29{,}420 \ Pa$$

http://ingesolucionarios.blogspot.com

10.33

Determine the exit area and the exit velocity for isentropic flow of a perfect gas with $k = 1.4$ in the nozzle shown. How small can we make the exit area and still have isentropic flow with the given conditions entering the nozzle? Use tables.

$p_1 = 207{,}000 \quad Pa \qquad A_1 = 0.1 \quad m^2$

$\rho_1 = 1.3 \quad kg/m^3 \qquad p_2 = 172{,}500 \quad Pa$

$V_1 = 47.2 \quad m/sec$

First find $M_1$ .

$$c = \sqrt{\frac{kp}{\rho}} = \sqrt{\frac{(1.4)(207{,}000)}{1.3}} = 472 \ m/sec \qquad \therefore \ M_1 = \frac{47.2}{472} = .1$$

From tables

$$\frac{A}{A^*} = 5.82 \qquad \therefore \ A^* = \frac{0.1}{5.82} = .0172 \quad m^2$$

Also

$$\frac{p}{p_0} = .993 \qquad p_0 = \frac{207{,}000}{.993} = 208{,}460 \quad Pa$$

Now go to exit.

$$\frac{p}{p_0} = \frac{172{,}500}{208{,}460} = .827$$

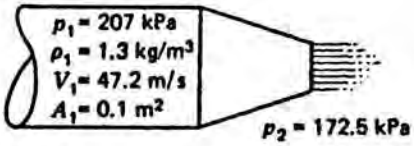


Hence: $\qquad M_e = .53$

And $\qquad \dfrac{A_e}{A^*} = 1.29 \qquad \therefore \ A_e = (.0172)(1.29) = .0222 \quad m^2$

Smallest possible area is $\qquad A^* = .0172 \quad m^2$

At $M = 0.1$ . $\qquad \dfrac{\rho_1}{\rho_0} = 0.995 \qquad \rho_0 = \dfrac{1.3}{0.995} = 1.31 \quad kg/m^3$

At $M_e = 0.53$ (EXIT) $\qquad \dfrac{\rho_2}{\rho_0} = 0.873 \qquad \rho_2 = (0.873)(1.31) = 1.14 \quad kg/m^3$

From continuity:

$$\rho_1 V_1 A_1 = \rho_2 V_2 A_2$$

$$(1.3)(47.2)(0.1) = (1.14)(V_2)(0.0222)$$

$$\boxed{V_2 = 242 \quad m/sec}$$

http://ingesolucionarios.blogspot.com

10.34

**Sketch a passage which will (*a*) increase the pressure in a subsonic flow isentropically, (*b*) increase the pressure in a supersonic flow isentropically, (*c*) increase the Mach number in a supersonic flow isentropically, (*d*) decrease the Mach number in a subsonic flow isentropically.**

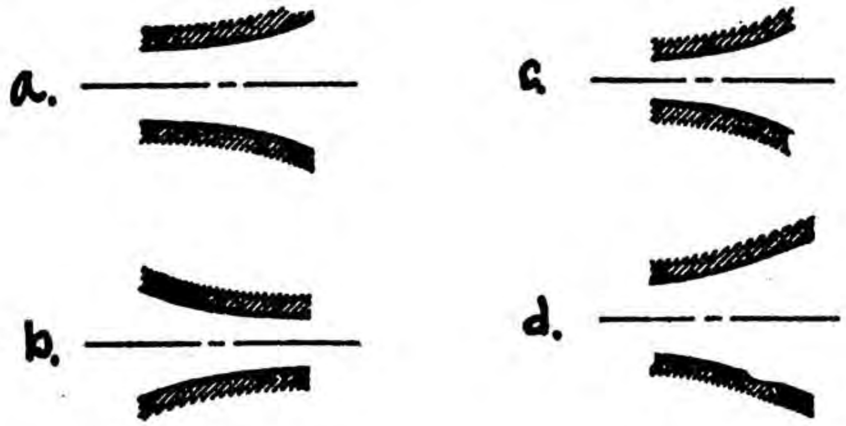


http://ingesolucionarios.blogspot.com
Edu_Zegarr_ch

http://ingesolucionarios.blogspot.com

10.35

Air is moving at high subsonic speed in a duct. If $h$ is 200 mm of mercury, what is the speed of the flow at point $A$ if there is no pitot tube present? The static pressure is 800 mm of mercury. The temperature is 80°C in the undistributed flow.

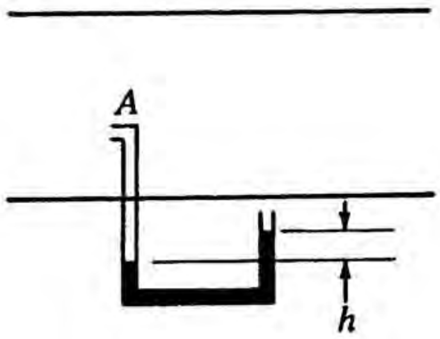


Note that $(\rho_0)_{abs} = (200+760) = 960\ mm\ Hg\ abs$ .

$$\therefore \quad \frac{p}{p_0} = \frac{800}{960} = .833$$

From **isentropic** tables:

$$M = .518$$

**Also**

$$c = \sqrt{kRT} = \sqrt{(1.4)(287)(273+80)} = 376.6 \quad m/\text{sec}$$

$$\frac{V}{c} = M$$

$$\therefore \quad V = (c)(M) = (376.6)(.518) = \boxed{195.0 \ m/\text{sec}}$$

http://ingesolucionarios.blogspot.com Edu_Zegarr_ch

10.36

Determine the exit area in Prob. 10.33 for a nozzle efficiency of 90 percent. Take $c_p$ = 0.24 Btu/(lbm)(°F), $k$ = 1.4, and $R$ = 287 N · m/(kg)(K). Give result in square meters.

$$c_p = 1{,}005 \quad N\text{-}m/kg{\cdot}K$$

$$k = 1.4$$

$$R = 287 \quad N\text{-}m/kg{\cdot}K$$

$$p_1 = 270{,}000 \quad Pa \qquad\qquad p_2 = 172{,}500 \quad Pa$$

$$\rho_1 = 1.3 \quad kg/m^3$$

$$V_1 = 47.2 \quad m/\text{sec}$$

$$A_1 = 0.1 \quad m^2$$

$$\eta = .90$$

We shall need $(T_2)_{isen}$ . To compute $(T_2)_{isen}$ we use the result that $M_1 = .1$ from Prob. 10.33. Hence:

$$T_1 = (T_0)(.998)$$

$$T_0 = \frac{\dfrac{207{,}000}{(1.3)(287)}}{.998} = \frac{555}{.998} = 556 \quad K \qquad\qquad T_1 = 555 \quad K$$

Since $M_2 = .53$ from Prob. 10.33 we have

$$\frac{T_2}{T_0} = .947 \qquad\qquad T_2 = 527 \quad K$$

Now employ Eq. (10.40) using $c_p(T_1 - T_2)$ in place of $(h_1 - h_2)$ . We get:

$$.9 = \frac{\left(\dfrac{V_2^2}{2}\right)_{act}}{\left[\dfrac{V_1^2}{2} + (1{,}005)(555-527)\right]}$$

http://ingesolucionarios.blogspot.com

**(cont.)**

$$\therefore \left(\frac{V_2^2}{2}\right)_{act} = .9(1{,}114 + 28{,}140)$$

$$(V_2)_{act} = 229 \quad m/sec$$

We need $(\rho_2)_{act}$ now. For this we must evaluate $(T_2)_{act}$. If there were no "reheating" then $V_2^2/2 = 30{,}259$ instead of $27{,}233$. Thus we can expect an increase in exit temperature due to reheating of:

$$\frac{(30{,}259-27{,}233)}{(1{,}005)} = (\Delta T_2) = \frac{3{,}026}{(1{,}005)} = 3.01 \quad K$$

Hence $(T_2)_{act} = 527+3 = 530 \ K$. Using the Eq. of state:

$$\rho_2 = \frac{172{,}500}{(287)(530)} = 1.134 \quad kg/m^3$$

From **continuity** we get: $w = (1.3)(0.1)(47.2) = (1.134)(229)(A_2)$

$$\boxed{A_2 = .0236 \quad m^2}$$

http://ingesolucionarios.blogspot.com Edu_Zegarr_ch

10.37

For a plane moving at M = 2 at 30,000 ft in the standard atmosphere, what is the dynamic pressure its pitot tube will record? What is the stagnation temperature?

At 30,000 *ft*

$$\begin{cases} T = -48.0°F \\ p = 628.4\ psf \\ c = 995\ ft/sec \end{cases}$$

From **isentropic tables**

$$\therefore \quad \frac{p}{p_0} = .128$$

$$\frac{628.4}{p_0} = .128$$

$$p_0 = 4{,}909\ psf$$

$$\therefore \quad p_{dyn} = p_0 - p = 4{,}909 - 628.4 = \boxed{4{,}281\ psf}$$

Again, from **isentropic tables**

$$\frac{T}{T_0} = .556$$

$$\frac{460 - 48.0}{T_0} = .556$$

$$T_0 = 741°R = \boxed{281°F}$$

http://ingesolucionarios.blogspot.com

10.38

In an isentropic flow of air the temperature of some point in the flow is 10°C and the velocity is 130 m/s. Determine the velocity of sound at stagnation conditions and at M = 1 for the flow.

At given location

$$c = \sqrt{kRT} = \sqrt{(1.4)(287)(283)} = 337.2\ m/s$$

$$\therefore\ M = \frac{V}{c} = \frac{130}{337.2} = .3855$$

From **isentropic tables**

$$\frac{T}{T_0} = .971$$

$$\therefore\ T_0 = \frac{283}{.971} = 291.4\ K$$

At stagnation conditions

$$c_0 = \sqrt{kRT_0} = \sqrt{(1.4)(287)(291.4)}$$

$$\boxed{c_0 = 342.2\ m/s}$$

For **sonic** conditions $M = 1$

$$V = c$$

From **isentropic tables**

$$\frac{T^*}{T_0} = .833$$

$$T^* = (.833)(291.4) = 242.7$$

$$c^* = \sqrt{(1.4)(287)(242.7)} = \boxed{312.3\ m/s}$$

http://ingesolucionarios.blogspot.com Edu_Zegarr_ch 

http://ingesolucionarios.blogspot.com

10.39

Air is to expand isentropically in a nozzle from a stagnation temperature of 30°C. What is the Mach number when the speed of flow reaches 200 m/s? What is the velocity at the throat?

$$\frac{200}{\sqrt{kRT}} = M$$

$$\therefore \quad \frac{200}{\sqrt{(1.4)(287)(T)}} = M$$

$$M = \frac{9.98}{\sqrt{T}} \tag{1}$$

$$\frac{T}{T_0} = \frac{1}{1 + \left(\frac{k-1}{2}\right)M^2}$$

$$T = 303\,\frac{1}{1 + .2M^2} \tag{2}$$

Subst. for $M$ from (1):

$$T = 303\,\frac{1}{1 + (.2)\,\frac{9.98^2}{T}} = \frac{303}{1 + \frac{19.92}{T}}$$

$$\therefore \quad T + 19.92 = 303$$

$$T = 283.08\ K$$

From Eq. (1)

$$M = .5932$$

At throat

$$T* = 303\,\frac{1}{1 + (.2)(1^2)} = 252.5$$

$$V^* = \sqrt{(1.4)(287)(252.5)} = \boxed{318.5\ m/s}$$

http://ingesolucionarios.blogspot.com

(cont.)

From table

$$\frac{T}{T_0} = .9344 \qquad T_0 = \frac{280.0896}{.9344} = 302.965\ K$$

At $M = 1$

$$\frac{T^*}{T_0} = .833 \qquad T^* = (.833)(302.965) = 252.37\ K$$

$$V^* = c^* = \sqrt{(1.4)(287)(252.37)} = \boxed{318.4\ m/s}$$

10.40

The pitot tube on a plane gives the following data:

$p_0 = 5$ lb/in$^2$ gage

$p = 13.8$ lb/in$^2$ absolute

The ambient temperature is 35°F. What are the Mach number and speed of the plane?

$$\frac{p}{p_0} = \frac{(13.8)}{(5 + 14.7)} = .70$$

From isentropic tables

$$\therefore \boxed{M = .732}$$

$$c = \sqrt{kRT} = \sqrt{(1.4)(53.3)(32.2)(460 + 35)} = 1{,}091\ ft/sec$$

$$V = (1{,}091)(.732) = \boxed{798\ ft/sec}$$

http://ingesolucionarios.blogspot.com

10.41

A convergent nozzle is to discharge air at sonic conditions at a pressure of the atmosphere 101,325 Pa. What is the reservoir pressure required? If a nozzle is to discharge at sonic conditions at a pressure of 150,000 Pa, what is the reservoir pressure?

a) For $M = 1$

From isentropic tables

$$\frac{p}{p_0} = .528$$

$$\therefore \quad p_0 = \frac{101{,}325}{.528} = 191{,}903 \ Pa$$

b)

$$\frac{p}{p_0} = .528$$

$$p_0 = \frac{150{,}000}{.528} = 284{,}091 \ Pa$$

http://ingesolucionarios.blogspot.com

http://ingesolucionarios.blogspot.com

10.42

Prove that the point of maximum entropy on the Fanno line corresponds to sonic conditions. *Hint:*

(*a*) Express the first law of thermodynamics in differential form at point *a*, using enthalpy (steady-flow equation).

(*b*) Express the continuity equation in differential form.

(*c*) Now express the first law of thermodynamics for a system in differential form, and reach the relation

$$dh = \frac{dp}{\rho}$$

(*d*) Noting that $ds = 0$ at the point of interest, indicating that the flow there is isentropic, we can reach the following result by combining the preceding equations:

$$V = \sqrt{\left(\frac{\partial p}{\partial \rho}\right)_s}$$

The flow is thus sonic at the point of maximum entropy.

a) $dh + V\,dV = 0$ (a)

b) $d(\rho V) = 0 \quad , \quad \rho\,dV = -V\,d\rho$ (b)

c) $du = dQ - p\,dv$

But $dQ = 0$

$$\therefore \quad du = -p\,dv \qquad \text{(c)}$$

But $dh = du + p\,dv + v\,dp$

$$\therefore \quad du = dh - p\,dv - v\,dp$$

Substitute into Eq. (c). We get:

$$dh = v\,dp = \frac{dp}{\rho} \qquad \text{(d)}$$

Substituting Eq. (d) into Eq. (a) as well as Eq. (b) into (a), we get:

$$\frac{dp}{\rho} - V\left(V\frac{d\rho}{\rho}\right) = 0$$

$$\frac{dp}{d\rho} = V^2 \qquad V = \sqrt{\left(\frac{dp}{d\rho}\right)}$$

At point (a), $ds = 0$ and without heat transfer the flow is isentropic at this point so that we can say

$$V = \sqrt{\left(\frac{dp}{d\rho}\right)_s}$$

And so point (a) corresponds to sonic conditions.

10.43

a) $d(\rho V) = 0$

$$\rho \, dV + V d\rho = 0 \qquad \text{(a)}$$

b) **Momentum Eq.** in Diff. Form.

$$(p_1 - p)(A) = \rho V^2 A - \rho_1 V_1^2 A$$

Differentiate.

$$-dp = d\rho V^2 + \rho \, 2V dV \qquad \text{(b)}$$

Replace $\rho dV$ using Eq. (b).

$$-dp = d\rho V^2 + 2V(-V d\rho)$$

$$-\frac{dp}{d\rho} = (V^2 - 2V^2) = -V^2$$

$$\frac{dp}{d\rho} = V^2$$

$$V = \sqrt{\frac{dp}{d\rho}}$$

At point $b$

$$ds = 0$$

And flow is **isentropic** since we have no friction and at this point cannot have heat transfer. Hence at point $b$

$$V = \sqrt{\left(\frac{\partial p}{\partial \rho}\right)_s}$$

And the velocity is now the **sonic** velocity.

http://ingesolucionarios.blogspot.com

10.45

Air is moving at Mach number 3 in a duct and undergoes a normal shock. If the undisturbed pressure ahead of the shock is 69,000 Pa absolute, what is the increase in pressure after the shock? What is the loss in stagnation pressure across the shock?

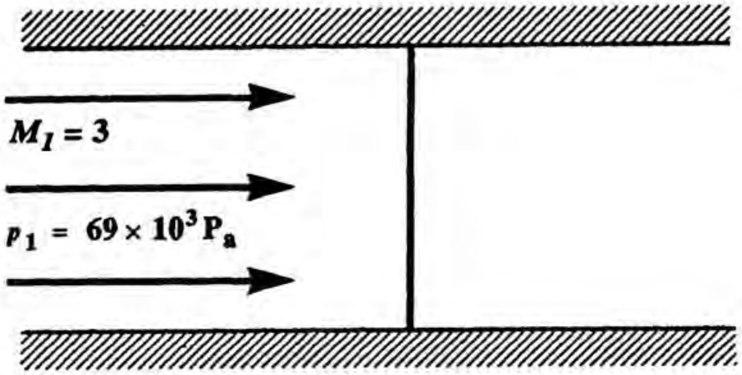


From **normal shock** tables:

$$\begin{cases} M_2 = .475 \\ \dfrac{p_2}{p_1} = 10.333 \\ \dfrac{(p_0)_2}{(p_0)_1} = .328 \end{cases}$$

Hence:

$$p_2 = (10.333)(69{,}000) = 712{,}980 \quad Pa$$

Now go to the **isentropic** tables for $(p_0)_1$ .

$$\frac{p_1}{(p_0)_1} = .027$$

$$(p_0)_1 = \frac{69{,}000}{.027} = 2.56 \times 10^6 \quad Pa$$

Hence:

$$(p_0)_2 = (.328)(2.56 \times 10^6) = 8.38 \times 10^5 \quad Pa$$

Consequently:

$$\Delta p_0 = 2.56 \times 10^6 - 8.38 \times 10^5 = \boxed{1.72 \times 10^6 \ Pa}$$

http://ingesolucionarios.blogspot.com

10.46

An airplane having a diffuser designed for subsonic flight has a normal shock attached to the edge of the diffuser when the plane is flying at a certain Mach number. If at the exit of the diffuser the Mach number is 0.3, what must the flight Mach number be for the plane, assuming isentropic diffusion behind the shock? The inlet area is 0.25 $m^2$ and the exit area is 0.4 $m^2$.

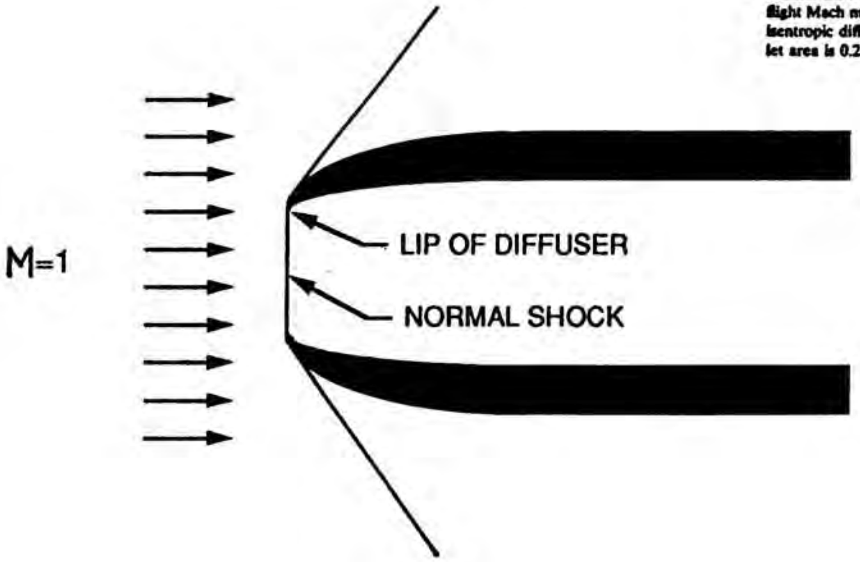


From **isentropic** tables:

$$\frac{A_e}{A^*} = 2.04 \qquad \therefore \quad A^* = \frac{.4}{2.04} = .196 \quad m^2$$

At inlet, $A_i = .25 \quad m^2$ . Hence:

$$\frac{A_i}{A^*} = \frac{.25}{.196} = 1.276$$

From **isentropic** tables: $M_2 = .536$

This is the Mach number behind the inlet shock. From the **normal shock** tables we can now get $M_1$ .

$$\boxed{M_1 = 2.287}$$

http://ingesolucionarios.blogspot.com Edu_Zegarr_ch 

http://ingesolucionarios.blogspot.com

10.47

A normal shock forms ahead of the diffuser of a turbojet plane flying at Mach number 1.2. If the plane is flying at 35,000-ft altitude in standard atmosphere, what is the entering Mach number for the diffuser and the stagnation pressure?

$$M_1 = 1.2$$

Hence from **normal shock** tables:

$$M_2 = .842$$

$$\frac{(p_0)_2}{(p_0)_1} = .993 \qquad \text{(a)}$$

Also, from **isentropic** tables we have for $M_1 = 1.2$ :

$$\frac{p_1}{(p_0)_1} = .412$$

Hence:

$$(p_0)_1 = \frac{498}{.412} = 1{,}210 \quad psf$$

where we have used the **standard atmosphere** table. Now using Eq. (a) we get:

$$(p_0)_2 = (.993)(1{,}210) = 1{,}200 \quad psf$$

10.48

Consider a supersonic flow through a stationary duct wherein a stationary shock is present. The Mach number ahead of the shock is 2 and the pressure and temperature are 103,500 Pa absolute and 40°C, respectively. What is the velocity of propagation of the shock relative to the fluid ahead of the shock? The fluid is air.

$$M_1 = 2$$

$$p_1 = 103{,}500 \quad Pa$$

$$T_1 = 40°\,C$$

$$M_1 = \frac{V_1}{c_1} = \frac{V_1}{\sqrt{kRT_1}}$$

$$V_1 = (2)\sqrt{(1.4)(287)(313)} = \boxed{710 \quad m/sec}$$

10.49

Consider reference of observation is from the plane. The ratio of the pressures across the shock wave is:

$$\frac{p_2}{p_1} = \frac{30.5}{10} = 3.05$$

$\therefore$ $M_1 = 1.66$ from **normal shock** tables. Plane is moving at a Mach no. of 1.66 . The velocity is determined next.

The speed of sound in the undisturbed region ahead of the shock is:

$$c = \sqrt{kRT} = \sqrt{(1.4)(287)(254)} = 319.5 \quad m/\text{sec}$$

$$\therefore \quad V = (1.66)(319.5) = 530 \quad m/\text{sec}$$

Hence the velocity of the plane is 530 $m$/sec .

A jet plane is diving at supersonic speed at close to constant speed. There is a curved shock wave ahead of it. A static pressure gage near the nose of the plane measures 30.5 kPa absolute. The ambient pressure and temperature of the atmosphere are 10 kPa and 254K, respectively. What are the flight Mach number for the plane and its speed if one assumes that in front of the static pressure gage the shock wave is plane?

10.50 **DO DEPEND ON SPATIAL REFERENCE**

(As to whether it is moving relative to the fluid.)

1. Stagnation pressure.
2. Stored energy.
3. Work.

Which of the following quantities depend on the spatial reference of observation, and which do not?
(*a*) Pressure (undistributed)
(*b*) Temperature (undistributed)
(*c*) Stagnation pressure
(*d*) Enthalpy
(*e*) Stored energy
(*f*) Entropy
(*g*) Work
Explain your decisions.

10.52

Rankine-Hugoniot relation

$$\frac{p_2}{p_1} = \frac{\dfrac{k+1}{k-1}\dfrac{\rho_2}{\rho_1} - 1}{\dfrac{k+1}{k-1} - \dfrac{\rho_2}{\rho_1}}$$

If $p_2/p_1 \to \infty$ , it may mean that the denominator goes to zero.

$$\frac{k+1}{k-1} = \frac{\rho_2}{\rho_1}$$

For $k = 1.4$ this becomes:

$$\frac{\rho_2}{\rho_1} = \frac{2.4}{.4} = 6$$

Show in the Rankine-Hugoniot equation that a shock of infinite strength, that is, $p_2/p_1 \to \infty$, implies, for $k = 1.4$, that $\rho_2/\rho_1 \to 6$. This gives the maximum increase in density through a normal shock possible for a perfect gas.

http://ingesolucionarios.blogspot.com

10.53

In a convergent-divergent nozzle a normal shock occurs at M = 2.5. If the pressure just after the shock is 500 kPa absolute, what must the reservoir pressure be?

From normal shock tables

For $M_1 = 2.5$

$$M_2 = .513$$

$$\frac{p_2}{p_1} = 7.125$$

$$\therefore \quad p_1 = \frac{500}{7.125} = 70.18 \; kPa$$

From isentropic tables

$$\frac{p_1}{p_0} = .059$$

$$\therefore \quad p_0 = \frac{70.18}{.059} = 1{,}189 \; kPa$$

$$\boxed{p_0 = 1{,}189 \; kPa}$$

http://ingesolucionarios.blogspot.com
Edu_Zegarr_ch

http://ingesolucionarios.blogspot.com

10.54 **DATA**

What is the static thrust for a rocket engine burning 25 kg/s of fuel on a test stand at the earth's surface where $p = 101{,}325$ Pa. The chamber pressure is $1.38 \times 10^6$ Pa absolute and the chamber temperature is 2760°C. Take $k = 1.4$ and $R = 355$ N-m/kg(K) for products of combustion. The throat area is 0.02 m², the exit area is 0.05 m², and there is a normal shock at $A_s = 0.04$ m².

$$p_0 = 1.38\times10^6 \ Pa$$

$$T_0 = 3{,}033 \ K$$

$$k = 1.4$$

$$R = 355 \ N\text{-}m/kg\,K$$

Go to shock.

$$\frac{A_s}{A^*} = \frac{.04}{.02} = 2$$

From **isentropic tables**

$$\frac{p_1}{p_0} = .09475 \qquad \frac{T_1}{T_0} = .50925 \qquad T_1 = (.50925)(3{,}033) = 1{,}545 \ K$$

$$\therefore \ p_1 = (.09475)(1.38\times10^6) = 130{,}755 \ Pa$$

$$M_1 = 2.195$$

Go to **shock tables** $\quad \dfrac{A}{A^*} = 1.258$

At exit $\quad M_2 = .54775$

$$\frac{p_2}{p_1} = 5.4545$$

$$\therefore \ p_2 = (130{,}755)(5.4545) = 713{,}203 \ Pa$$

$$\frac{T_2}{T_1} = 1.8525 \qquad \therefore \ T_2 = (1.8525)(1{,}544) = 2{,}860 \ K$$

$$\frac{(p_0)_2}{(p_0)_1} = .63025 \qquad (p_0)_2 = (.63025)(1.38\times10^6) = 869{,}745 \ Pa$$

http://ingesolucionarios.blogspot.com

**(cont.)**

$$\frac{.04}{A^*} = 1.258$$

$$A^* = \frac{.04}{1.258} = .0318\ m^2$$

$$\frac{A_e}{A^*} = \frac{.05}{.0318} = 1.572$$

$$M_e = .406$$

$$\frac{T_e}{T_0} = .968 \qquad \therefore\ T_e = (.968)(3{,}033) = 2{,}936\ K$$

Go to **isentropic tables.** Find new $A^*$ . For $M_2 = .54725$

$$\frac{A}{A^*} = \frac{.05}{.0318} = 1.573$$

$$\frac{T_e}{T_0} = .96815 \qquad T_e = (.96815)(3{,}033) = 2{,}936.4\ K$$

$$M_e = .4057$$

$$\frac{p_e}{p_0} = .893 \qquad p_e = (.893)(869{,}745) = 776{,}823\ Pa$$

**Eq. of State**

$$\rho_e = \frac{p_e}{RT_e} = \frac{776{,}823}{(355)(2{,}936)} = .7452$$

$$V_e = M_e c_e = (.4057)\left(\sqrt{(1.4)(355)(2{,}936)}\right) = 490\ m/s$$

**Momentum Eq.**

$$F = \rho_e V_e^2 A_e = (.7452)(490)^2(.05) = 8{,}949\ N$$

http://ingesolucionarios.blogspot.com Edu_Zegarr_ch

http://ingesolucionarios.blogspot.com

10.55

Air flows in a convergent-divergent nozzle and a normal shock occurs where the pressure is 90 kPa absolute. The reservoir conditions are $T$ = 60°C and $p$ = 201.3 kPa absolute. What is the loss in stagnation pressure across the shock? In what sense is this a "loss"?

$$\begin{cases} T_0 = 333\ K \\ (p_0)_1 = 201{,}300\ Pa\ abs \end{cases}$$

$$\therefore \quad \frac{p}{(p_0)_1} = \frac{90}{201.3} = .447$$

∴ From **isentropic tables**

$$M = 1.137$$

Go to normal shock tables

$$M_2 = .884$$

$$\frac{p_2}{p_1} = 1.342$$

$$\frac{(p_0)_2}{(p_0)_1} = .99717$$

$$(p_0)_2 = (201.3)(.99717) = 200.7312$$

$$(\Delta p_0) = (201.3) - (200.7312) = \boxed{.569\ k\,Pa\ abs}$$

This means that this pressure is no longer available to be converted to kinetic energy without losses.

http://ingesolucionarios.blogspot.com
Edu_Zegarr_ch

10.56

A duct has "swallowed" a stationary normal shock as shown. Find $p_e$, $V_e$, $T_e$, and $c_e$ for the plenum chamber.

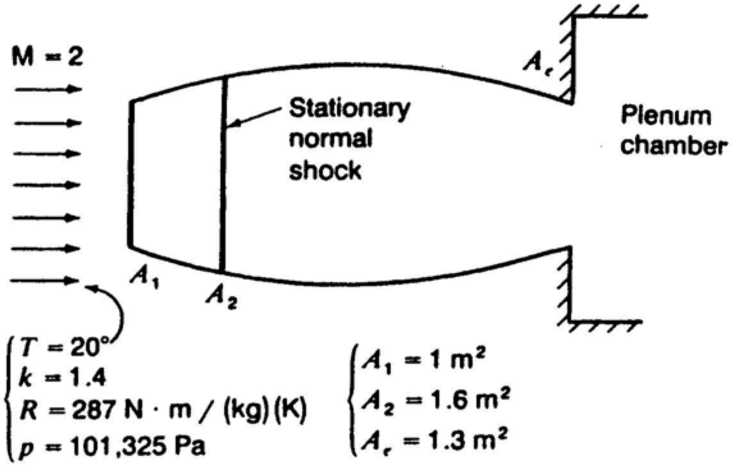


Consider **isentropic tables**

For $M_1 = 2$ , $k = 1.4$ $\begin{cases} \dfrac{A_1}{A^*} = 1.69 \\ \dfrac{p}{p_0} = .128 \end{cases}$ $\dfrac{T}{T_0} = .556$

$$\therefore \begin{cases} T_0 = \dfrac{293}{.556} = 527\ K \\ A^* = \dfrac{1}{1.69} = .5917\ m^2 \\ p_0 = \dfrac{101{,}325}{.128} = 792\ kPa \end{cases}$$

For $A_2 = 1.6\ m^2$

$$\frac{A_2}{A^*} = \frac{1.6}{.5917} = 2.704$$

$$\therefore \begin{cases} M_2 = 2.526 \\ \dfrac{p_2}{p_0} = .0564 \qquad \therefore\ p_2 = (792)(.0564) = 44.7\ kPa \end{cases}$$

http://ingesolucionarios.blogspot.com
**(cont.)**

After the shock (use **normal shock tables**)

$$\begin{cases} M_2' = .5104 \\ \dfrac{(p_0)_2}{(p_0)_1} = .4886 \qquad (p_{0_2}) = (792)(.4886) = 387\ kPa \\ \dfrac{T_2}{T_1} = 2{,}163 \end{cases}$$

At the exit (now use **isentropic tables**), first find **new** $A^*$ after shock.

$$\frac{A_2}{(A^*)} = 1.32 \qquad \therefore\ A^* = \frac{1.6}{1.32} = 1.212\ m^2$$

$$\frac{A_e}{A^*} = \frac{1.30}{1.212} = 1.0725$$

$$\therefore\ M_e = .735$$

$$\frac{p_e}{(p_0)_2} = .698$$

$$p_e = (387)(.698) = 270\ kPa$$

$$\boxed{p_e = 270\ kPa}$$

$$\frac{T_e}{T_0} = .902$$

$$T_e = (.902)(527) = 475\ K$$

$$\boxed{T_e = 475\ K}$$

$$c_e = \sqrt{kRT} = \sqrt{(1.4)(287)(475)} = 437\ m/s \qquad \boxed{c_e = 437\ m/s}$$

$$V_e = (437)(.735) = 321\ m/s \qquad \boxed{V_e = 321\ m/s}$$

http://ingesolucionarios.blogspot.com

10.57

Start with the combined first and second law ($T\,ds = du + p\,dv$). Use the definition of the enthalpy to replace $du$. Using the equation of state, eliminate $v$ and use Eq. (10.3b) to eliminate $h$. Now integrate to get the entropy up to a constant of integration in the form

$$s = c_p \ln T - R \ln p + C$$

Hence the change in entropy across a shock is

$$\Delta s = c_p \ln \frac{T_2}{T_1} - R \ln\left(\frac{p_2}{p_1}\right)$$

$$T\,ds = du + p\,d\upsilon$$

But
$$h = u + p\upsilon$$

$$\therefore \quad dh = du + p\,d\upsilon + \upsilon\,dp$$

$$du = dh - p\,d\upsilon - \upsilon\,dp$$

$$T\,ds = dh - p\,d\upsilon - \upsilon\,dp + p\,d\upsilon$$

$$T\,ds = dh - \upsilon\,dp$$

But
$$\upsilon = \frac{RT}{p}$$

$$\therefore \quad T\,ds = dh - \frac{RT}{p}\,dp$$

Use Eq. [(10.3b)]
$$T\,ds = c_p\,dT - \frac{RT}{p}\,dp$$

$$ds = c_p \frac{dT}{T} - R\frac{dp}{p}$$

$$s = c_p \ln T - R \ln p + C$$

Across a shock

$$\boxed{\Delta s = c_p \ln\left(\frac{T_2}{T_1}\right) - R \ln\left(\frac{p_2}{p_1}\right)}$$

http://ingesolucionarios.blogspot.com

10.58

Figure is a convergent-divergent nozzle attached to a chamber (tank 1) where the pressure is 100 lb/in² absolute and the temperature is 200°F. The area of the throat is 3 in² and $A_1$, where we happen to have a normal shock, is 4 in². Finally $A_e$ is 6 in². What is the Mach number right after the shock wave? What is the Mach number at exit? Compute the stagnation pressure and actual pressure for the jet in tank 2. What is the stagnation temperature at exit? The fluid is air.

$T_0 = 660° R$

$p_0 = 100 \quad psia$

$A^* = 3 \quad in^2 \qquad A_1 = 4 \quad in^2 \qquad A_e = 6 \quad in^2$

a) Find $M_e$ to rt. of shock.

Since $A/A^* = 4/3 = 1.333$, we have $M_1$ from Table B-5.

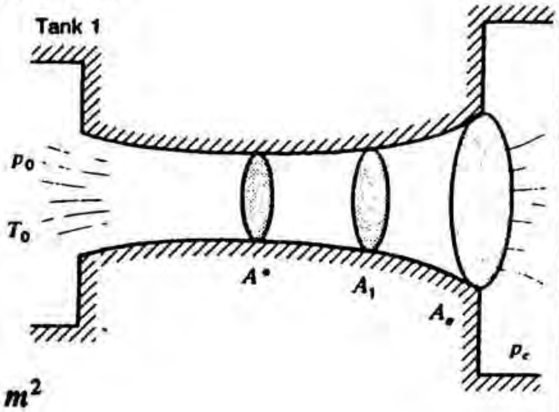


$$M_1 = 1.69$$

$\therefore$ $M_2$ from Table B-6 is .644 .

b) Find $M_e$ at exit.

For $M = .644$ Table B-5 gives:

$$\frac{A_1}{A^*} = 1.16 \qquad \therefore \quad A^* = \frac{4}{1.16} = 3.45 \quad m^2$$

Now at exit: $\dfrac{A_e}{A^*} = \dfrac{6}{3.45} = 1.74$

From Table B-5 $\quad M_e = .360$

From B-5 $\quad \dfrac{p_1}{p_0} = .206 \qquad p_1 = (100)(.206) = 20.6 \; psia$

From B-6 $\quad \dfrac{p_2}{p_1} = 3.165 \qquad p_2 = (3.165)(20.6) = 65.2$

From B-5 $\quad \dfrac{p_2}{p_0} = .759 \qquad p_0 = \dfrac{652}{.759} = 86.0 \quad psia$

From B-5 $\quad \dfrac{p_e}{p_o} = .914 \qquad p_e = (86)(.914) = 78.5 \quad psi$

$$\boxed{T_0 = 200° F}$$

http://ingesolucionarios.blogspot.com

## 10.60

A convergent nozzle has an exit area of $1.3 \times 10^{-3}\ m^2$. It permits flow of air to proceed from a large tank in which the pressure of the air is 138,000 Pa absolute and the temperature is 20°C. If the ambient pressure outside the tank is 101,325 Pa, what are the velocity of the flow on leaving the nozzle and the mass flow? Neglect friction.

$$\frac{p^*}{p} = .528 \qquad p^* = (138{,}000)(.528) = 72{,}800 \quad Pa$$

Hence fluid leaves subsonically and $p_j = 101{,}325\ Pa$ .

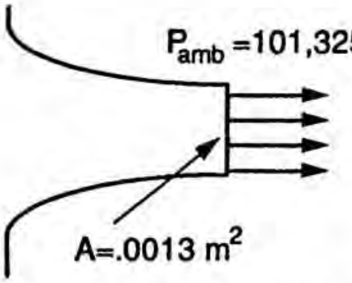


$$\frac{p_j}{p_0} = \frac{101{,}325}{138{,}000} = .734$$

Hence: $M_e = .68$

$$\frac{T_e}{T_0} = .915 \qquad T_e = 268\ K$$

$$V_e = \sqrt{(1.4)(287)(268)}\ (.68) = 223 \quad m/\text{sec}$$

$$\rho_e = \frac{101{,}325}{(287)(268)} = 1.317 \quad kg/m^3$$

$$w = (1.317)(223)(.0013) = .382 \quad kg/\text{sec}$$

## 10.61

In Prob. 10.60 suppose that you are changing the ambient pressure. What is the largest pressure that will permit the maximum flow through the nozzle? What are the maximum mass flow and temperature of the air leaving the nozzle? Neglect friction.

Largest pressure is $72{,}800\ N/m^2$ , i.e., the critical pressure.

At $\quad M = 1 \qquad \dfrac{T^*}{T_0} = .833 \qquad T^* = (293)(.833) = 244 \quad K$

$$V_e = \sqrt{(1.4)(287)(244)} = 313 \quad m/\text{sec}$$

$$\rho_e = \frac{72{,}800}{(287)(244)} = 1.040 \quad kg/m^3$$

$$w = (1.040)(313)(1.3\times10^{-3}) \ \ kg/s = \boxed{.423 \quad kg/s}$$

http://ingesolucionarios.blogspot.com

10.62

A convergent-divergent nozzle with a throat area of 0.0013 m$^2$ and an exit area of 0.0019 m$^2$ is connected to a tank wherein air is kept at a pressure of 552,000 Pa absolute and a temperature of 15°C. If the nozzle is operating at design conditions, what should be the ambient pressure outside and the mass flow? What is the critical pressure? Neglect friction.

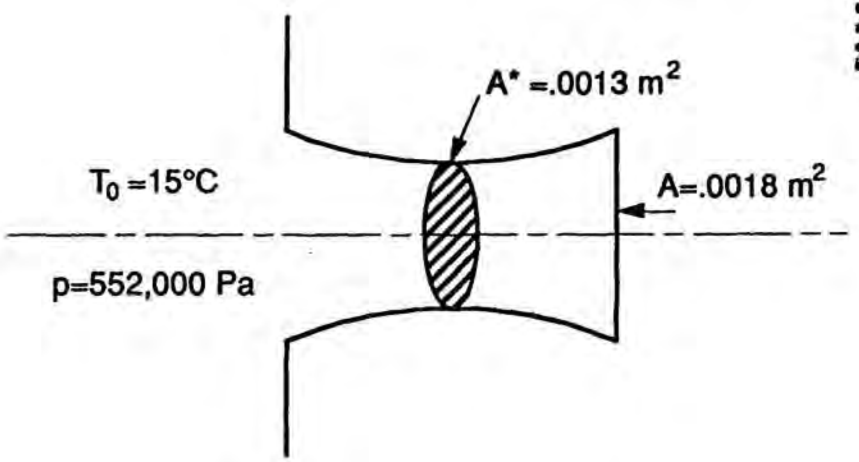


For design operation we can say: $\frac{A_e}{A^*} = 1.46$

From **isentropic** tables: $M_e = 1.82$

$$\frac{p_e}{p_0} = 0.169 \qquad \therefore \; p_e = (.169)(552{,}000) = 93{,}300 \;\; Pa$$

Also

$$\frac{T_e}{T_0} = .602 \qquad T_e = (.602)(288) = 173 \;\; K$$

$$V_e = \sqrt{(1.4)(287)(173)}\,(1.82) = 480 \;\; m/s$$

$$\rho_e = \frac{(93{,}300)}{(287)(173)} = 1.879 \;\; kg/m^3$$

Hence: $w = (1.879)(480)(.0019) = 1.71 \;\; kg/s$

At throat

$$\frac{p^*}{p_0} = .528$$

$p* = 291{,}500 \; Pa$

http://ingesolucionarios.blogspot.com

10.63

In Prob. 10.62 what is the ambient pressure at which a shock will first appear just inside the nozzle? What is the ambient pressure for the completely subsonic flow of maximum mass flow? Neglect friction.

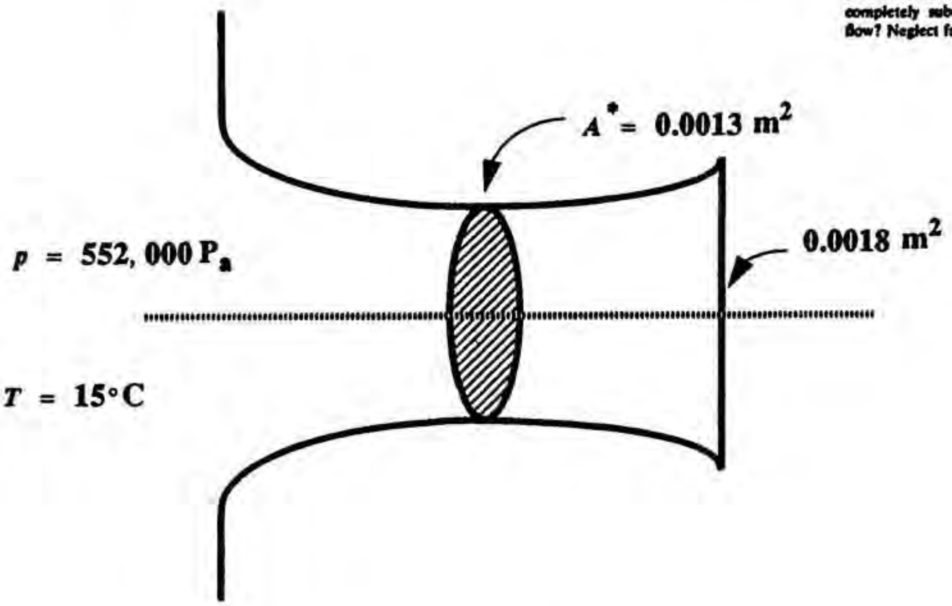


a) From previous problem we know that $M$ just before the shock is 1.82 . From the **normal shock** tables we have just down stream of the shock

$$M_e = .612$$

Also, $$\frac{p_e}{p_1} = 3.698$$

Hence: $$p_e = (3.698)(93,300) = 345,000 \quad Pa$$

(Note the pressure 93,300 $Pa$ was taken from the previous problem.)

b) For completely subsonic flow we assume isentropic flow and using $A_e/A^* = 1.46$ we have from the **isentropic** tables:

$$\frac{p_e}{p_0} = .874$$

Hence:

$$p_e = (552,000)(.874) = \boxed{482,450 \ Pa}$$

http://ingesolucionarios.blogspot.com

10.64

A rocket is operating with a normal shock positioned as shown. What is the thrust of the rocket? Explain what you are doing clearly.

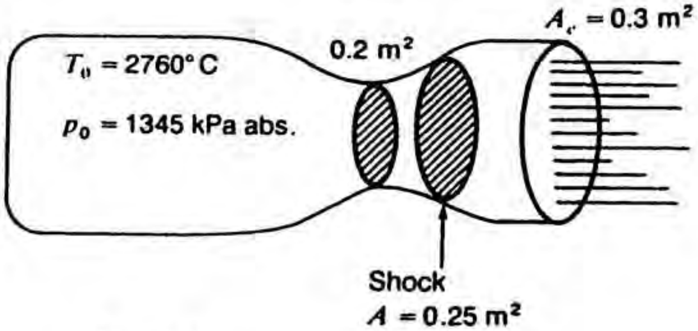


$$\begin{cases} k = 1.4 \\ R = 355\ N \cdot m/(kg)(K) \end{cases}$$

From **isentropic** flow to left of shock

$$\frac{A}{A^*} = \frac{.250}{.2} = 1.250$$

$$\therefore\ M_1 = 1.6$$

$$\frac{p_1}{p_0} = .235 \qquad \therefore\ p_1 = (.235)(1{,}345\times10^3) = 316.1\times10^3\ \ Pa\ abs$$

Go to **normal shock tables**

$$M_2 = .668$$

$$\frac{(p_0)_2}{(p_0)_1} = .895 \qquad \therefore\ (p_0)_2 = (.895)(1{,}345\times10^3) = 1{,}204\times10^3\ \ Pa\ abs$$

Go to **isentropic tables** for flow after the shock. Get a new $A^*$.

For $M = .668$

$$\frac{A}{A^*} = 1.126$$

http://ingesolucionarios.blogspot.com

**(cont.)**

$$\therefore\ A^* = \frac{.25}{1.126} = .222\ m^2$$

$$\therefore\ \frac{A_e}{A^*} = \frac{.3}{.222} = 1.351$$

And so

$$M_e = .4945$$

Hence $\dfrac{p_e}{p_0} = .846 \qquad \therefore\ p_e = (.846)(1{,}204\times10^3) = 1{,}019\times10^3\ \ Pa\ abs$

$$\frac{T_e}{T_0} = .9531 \qquad \therefore\ T_e = (.9531)(2{,}760 + 273) = 2{,}891\ K$$

$$\rho_e = \frac{p_e}{RT_e} = \frac{1{,}019\times10^3}{(355)(2{,}891)} = .9930\ \frac{kg}{m^3}$$

$$c_e = \sqrt{kRT_e} = \sqrt{(1.4)(355)(2{,}891)} = 1{,}199\ m/s$$

$$V_e = M_e c_e = (.4945)(1{,}199) = 592.7\ m/s$$

Now **Momentum Eq.**

$$T = \rho_e V_e^2 A_e = (.9930)(592.7)^2(.3)$$

$$\boxed{T = 1.047\times10^5\ N}$$

http://ingesolucionarios.blogspot.com

10.65

Suppose that you are given the data shown for the convergent-divergent nozzle. A shock is present in the nozzle, as shown. Set up formulations by which one could proceed to ascertain the approximate position and strength of the shock.

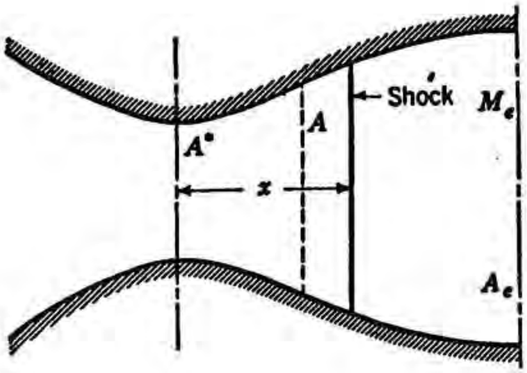


a) First find $M_2$ as a function of $\xi$ using isentropic data starting from exit conditions and working in.

b) Find $M_1$ as a function also of $\xi$ using isentropic data starting from the throat and working downstream.

c) From these curves plot $M_2$ vs. $M_1$ .

d) Also plot $M_2$ vs. $M_1$ using normal shock relations. Where they intersect with curve from (c) gives the proper $M_1$ and $M_2$ .

e) Now with either $M_1$ or $M_2$ go back to the isentropic data of steps (b) or (a), respectively, and give $\xi$ which is the distance of the shock from the exit.

http://ingesolucionarios.blogspot.com
Edu_Zegarr_ch

http://ingesolucionarios.blogspot.com

10.66

In Prob. 10.65, $M_{exit} = 0.5$, $A^* = 2$ in$^2$, and $A_e = 3$ in$^2$, with the divergent part of the nozzle having a conical shape between these two areas. This cone has a half angle of 20°. Take $p_{amb}$ as 70 lb/in$^2$. What is the position of the normal shock? Neglect friction outside the normal shock. Give the result as a distance from the exit of the nozzle.

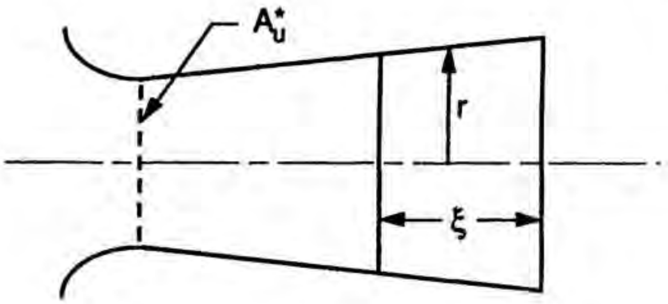


$$A_u^* = 2 \quad in^2 \qquad (upstream\ throat\ area)$$

$$A_e = 3 \quad in^2 \qquad p_e = 70 \quad psia \qquad M_e = .5$$

**Geometrical** considerations. $\qquad A_e = 3 = \pi r_e^2 \qquad \therefore \quad r_e = .977$

$$r = r_e - \xi \tan 20° = .977 - .364\xi \qquad \text{(a)}$$

To get downstream throat area $A_d^*$ we have using **isentropic** tables and $M = .5$ :

$$\frac{A_e}{(A_d^*)} = 1.34 \qquad \therefore \quad (A_d^*) = \frac{3}{1.34} = 2.24 \quad in^2$$

It will be simplest to plot $M_2$ vs. $A$ rather than $\xi$ . The following values of $M_2$ are found using the **isentropic** tables.

| $A$ | $A/A_d^*$ | $M_2$ |
|---|---|---|
| 2.4 | 1.071 | .74 |
| 2.6 | 1.161 | .64 |
| 2.8 | 1.240 | .56 |
| 2.9 | 1.30 | .52 |

Next we find $M_1$ as a function of $A$ upstream of the normal shock.

http://ingesolucionarios.blogspot.com

**(cont.)**

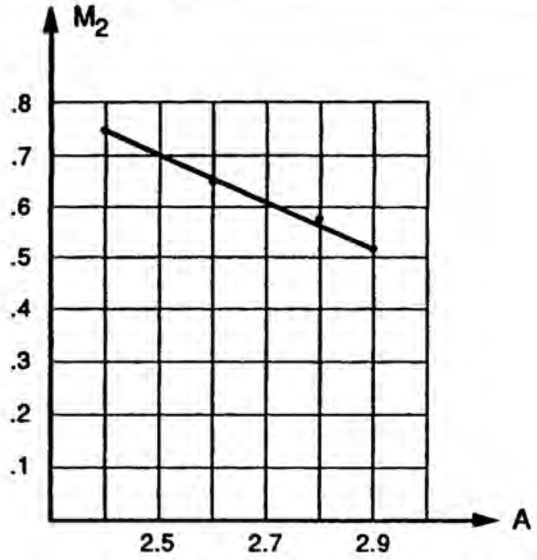


(I)

| $A$ | $A/A_u^*$ | $M_1$ |
|---|---|---|
| 2.2 | 1.10 | 1.38 |
| 2.3 | 1.15 | 1.46 |
| 2.4 | 1.20 | 1.54 |
| 2.5 | 1.25 | 1.60 |
| 2.6 | 1.30 | 1.66 |
| 2.7 | 1.35 | 1.71 |
| 2.8 | 1.40 | 1.76 |
| 2.9 | 1.45 | 1.81 |

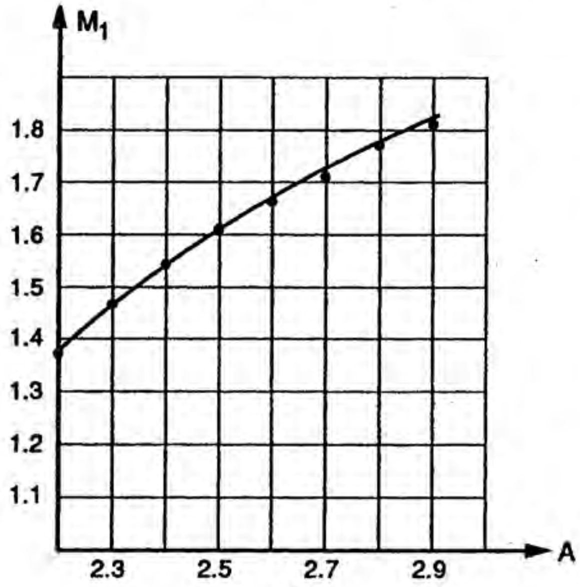


(II)

http://ingesolucionarios.blogspot.com

**(cont.)**

Now we plot $M_1$ vs. $M_2$ using normal shock data as well as data from the preceding curves.

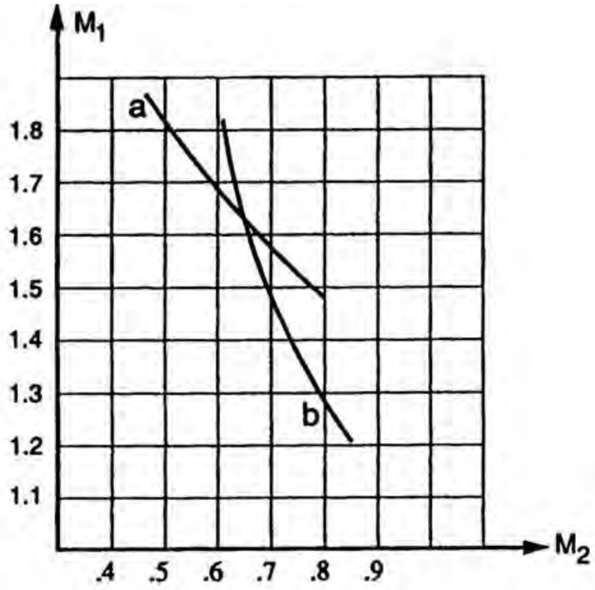


(III)

Curve (a) taken from plots I and II. Curve (b) is from normal shock tables.

The shock occurs at:

$$M_1 \sim 1.65 \qquad M_2 \sim .65$$

Hence: $A_2 = 2.6$

Now going back to Eq. (a) we have: $2.6 = \pi(.977 - .364\xi)^2$

$$.91 - .977 = -.364\xi$$

$$\xi = .184\ in.$$

We can now say that the shock will appear about .18 *in.* from outlet.

http://ingesolucionarios.blogspot.com

10.67

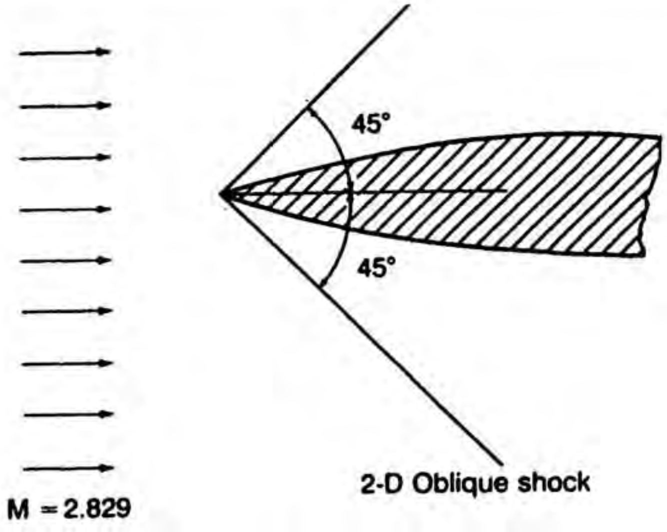


For a flow shown in Fig.
(a) Find the Mach number of the flow directly after the oblique shocks.
(b) Find the direction of streamlines directly after the shocks. Give angle between streamline and shock.

$$\begin{cases} p = 101{,}325 \\ T = 20°C \end{cases}$$

$$M_2^2 = \frac{\left[\frac{2}{1-k}\right] - M_1^2 \sin^2 45°}{\sin^2(45° - \beta)\left\{1 + \left[\frac{2k}{1-k}\right](M_1^2 \sin^2 45°)\right\}}$$

$$M_2^2 = \frac{\left(-\frac{2}{.4}\right) - (2.829)^2(.707)^2}{\sin^2(45° - \beta)\left\{1 + \left[\frac{2(1.4)}{-.4}\right](2.829)^2(.707)^2\right\}}$$

$$M_2^2 = \frac{-5 - 4}{\sin^2(45° - \beta)(-27)}$$

$$M_2^2 = \frac{1}{3 \sin^2(45° - \beta)} \tag{1}$$

Go to Eq. (11.72)

http://ingesolucionarios.blogspot.com

**(cont.)**

$$\frac{\rho_1}{\rho_2} = \frac{2}{k+1}\left(\frac{1 + \left[\frac{k-1}{2}\right]M_1^2\sin^2\alpha}{M_1^2\sin^2\alpha}\right)$$

$$\frac{\rho_1}{\rho_2} = \left(\frac{2}{2.4}\right)\left(\frac{1 + \left(\frac{.4}{2}\right)(2.829)^2(.707)^2}{(2.829^2)(.707)^2}\right) = .3750$$

$$\frac{\tan(45° - \beta)}{\tan 45°} = .3750$$

$$\tan(45° - \beta) = .3750$$

$$45° - \beta = 20.56°$$

$$\boxed{\beta = 24.44°}$$

Go to (1).

$$M_2^2 = \frac{1}{(3)\sin^2(45 - 24.44)}$$

$$\boxed{M_2 = 1.644}$$

http://ingesolucionarios.blogspot.com

10.68

A supersonic flow of air, at Mach number 2.5 approaches a double-wedge airfoil. What is the possible smaller shock angle $\alpha$? What is $M_2$? Does an oblique shock occur as a result of corner $B$? Of corner $C$?

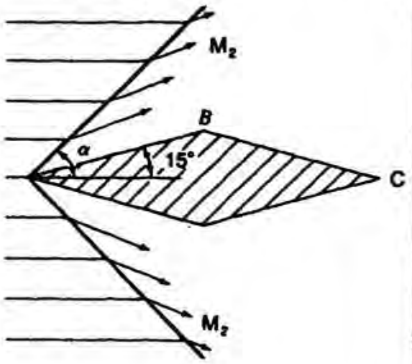


a) Go to Eq. (10.72)

$$\frac{\tan(\alpha-\beta)}{\tan\alpha} = \left(\frac{2}{k+1}\right)\left(\frac{1 + \frac{k-1}{2}M_1^2\sin^2\alpha}{M_1^2\sin^2\alpha}\right)$$

$$\frac{\tan(\alpha-15)}{\tan\alpha} = \left(\frac{2}{2.4}\right)\left(\frac{1 + \frac{.4}{2}(2.5)^2\sin^2\alpha}{2.5^2\sin^2\alpha}\right)$$

$$\frac{\tan(\alpha-15)}{\tan\alpha} = (.833)\frac{1 + 1.250\sin^2\alpha}{6.25\sin^2\alpha}$$

Solve by trial and error

$$\alpha = 36.93°$$

Now go to Eq. (10.72)

$$M_2^2 = \frac{\frac{2}{1-k} - M_1^2\sin^2\alpha}{\sin^2(\alpha-\beta)\left(1 + \frac{2k}{1-k}M_1^2\sin^2\alpha\right)}$$

$$M_2^2 = \frac{\frac{2}{-.4} - (2.5)^2\sin^2 36.93}{\sin^2(36.93-15)\left[1 + \frac{2.8}{-.4}(2.5)^2(\sin^2 36.93)\right]}$$

$$M_2^2 = \frac{-7.256}{-2.064} = 3.516$$

$$M_2 = 1.875$$

b) No. There is an expansion wave

c) Yes

http://ingesolucionarios.blogspot.com

10.69

A two-dimensional supersonic flow of air at M = 3 forms an oblique shock as a result of the corner *A* at the boundary. Verify that one possible angle $\alpha$ is 52°. Compute $M_2$ for this $\alpha$. Verify that another possible angle is $\alpha$ = 75.2°. Compute $M_2$ for this $\alpha$. Note there are two solutions possible: one leading to subsonic flow and another leading to supersonic flow.

Substitute $\alpha = 52°$ into Eq. (10.72).

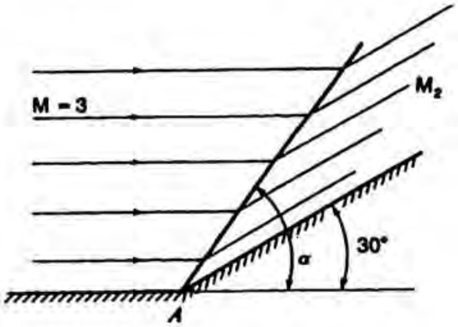


$$\frac{\tan(52° - 30°)}{\tan(52°)} = \frac{2 + (1.4 - 1)(9)(\sin^2 52°)}{(1.4 + 1)(9)(\sin^2 52°)}$$

$$.3157 = .3158$$

From Eq. (10.70)

$$M_2^2 = \frac{-\dfrac{2}{.4} - 9\sin^2 52°}{\sin(22°)\left[1 - \left(\dfrac{2.8}{.4}\right)(9)(\sin^2 52°)\right]}$$

$M_2 = 1.407$ supersonic

Subst. $\alpha = 75.2°$

$$\frac{\tan(75.2° - 30°)}{\tan(75.2°)} = \frac{2 + 3.6\sin^2(75.2°)}{2(.6\sin^2(75.2°)}$$

$$.2661 = .2657$$

Close enough!

$$M_2^2 = \frac{-\dfrac{2}{.4} - 9\sin^2 75.2°}{\sin^2 45.2°\left[1 - \left(\dfrac{2.8}{.4}\right)(9)\sin^2 75.2°\right]} = \frac{-13.41}{-29.15}$$

$$\boxed{M_2 = .6783}$$ subsonic

http://ingesolucionarios.blogspot.com

10.70

An oblique shock is oriented at an angle $\alpha$ of 70° to the flow. The approach Mach number is 3. What is the final Mach number after the shock? The temperature ahead of the shock is 5°C and the fluid is air.

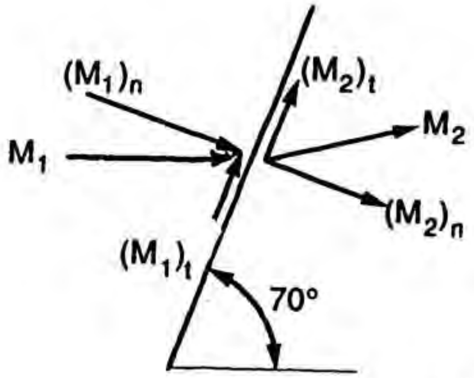


$M_1 = 3 \qquad T = 5°C$

$(M_1)_n = (3)(\cos 20°) = 2.82 \qquad (M_1)_t = (3)(\sin 20°) = 1.026$

We wish to compute $(V_1)_n$ and $(V_1)_t$ next. Hence:

$$c_1 = \sqrt{(1.4)(287)(278)} = 334.2 \quad m/s$$

$$\therefore \quad (V_1)_n = 942 \quad m/s \qquad (V_1)_t = 343 \quad m/s$$

Now from the **normal shock** tables using $(M_1)_n = 2.82$, we get:

$$\frac{T_2}{T_1} = 2.473$$

Hence: $T_2 = (2.473)(278) = 687.5 \ K$

Hence: $c_2 = \sqrt{(1.4)(287)(687.5)} = 526 \quad m/s$

Since $(V_2)_t = (V_1)_t = 343 \quad m/s$

we get for $(M_2)_t$: $(M_2)_t = \frac{343}{526} = .652$

Also from **normal shock** tables $(M_2)_n = .487$

Hence:

$$M_2 = [(.652)^2 + (.487)^2]^{\frac{1}{2}} = \boxed{.814}$$

http://ingesolucionarios.blogspot.com

10.71

Supersonic flow at Mach number 4 undergoes an oblique shock and then has a Mach number of 1.815. What is the inclination of the shock, $\alpha$, with the initial direction of the stream lines? The initial temperature is 10°F and the fluid is air. (Solve by trial and error.)

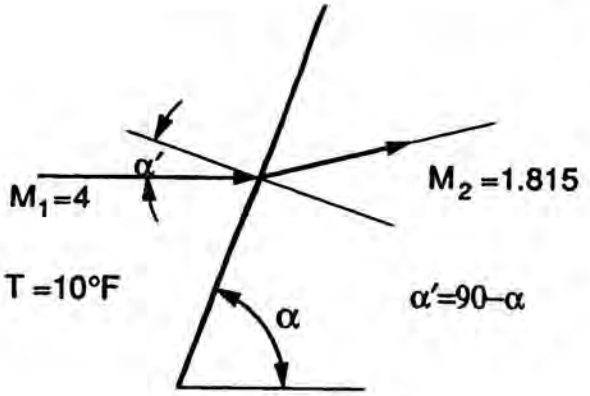


$$(M_1)_n = 4\cos\alpha'$$

Now use Eq. (10.59) for $(M_2)_n$.

$$(M_2)_n^2 = \frac{\dfrac{2}{1-k} - (M_1)_n^2}{1 + \dfrac{2k}{1-k}(M_1)_n^2}$$

$$(M_2)_n^2 = \frac{\dfrac{2}{1-1.4} - 16\cos^2\alpha'}{1 - \dfrac{2.8}{.4}16\cos^2\alpha'} = \frac{-5 - 16\cos^2\alpha'}{1 - 112\cos^2\alpha'} \qquad (1)$$

Now compute $(V_1)_t$.

$$(V_1)_t = (M_1 \sin\alpha')\sqrt{(1.4)(32.2)(53.3)(470)} = 4{,}250\sin\alpha'$$

Hence:

$$(V_2)_t = 4{,}250\sin\alpha'$$

$$(M_2)_t = \frac{4{,}250\sin\alpha'}{\sqrt{(1.4)(53.3)(32.2)(T_2)}} = 86.7\frac{\sin\alpha'}{\sqrt{T_2}} \qquad (2)$$

Now go to Eq. (10.60).

$$T_2 = \frac{T_1[1+3.2\cos^2\alpha'][112\cos^2\alpha'-1]}{115\cos^2\alpha}$$

Hence:

$$T_2 = \frac{4.09}{\cos^2\alpha}[1+3.2\cos^2\alpha'][112\cos^2\alpha'-1]$$

**(cont.)**

We may then write Eq. (2) as follows:

$$(M_2)_t = [86.7\sin\alpha']\left[\frac{\cos\alpha'}{\sqrt{(4.09)(1+3.2\cos^2\alpha')(112\cos^2\alpha'-1)}}\right]$$

$$(M_2)_t = 42.9\,\frac{\sin\alpha'\cos\alpha'}{\sqrt{(1+3.2\cos^2\alpha')(112\cos^2\alpha'-1)}}$$

Now combine $(M_2)_t$ and $(M_2)_n$ .

$$(1.815)^2 = \left[\frac{-5-16\cos^2\alpha'}{1-112\cos^2\alpha'}\right] + \left[(42.9)^2\,\frac{\sin^2\alpha'\cos^2\alpha'}{(1.+3.2\cos^2\alpha')(112\cos^2\alpha'-1)}\right]$$

Solve for $\alpha$ by trial and error to get:

$$\alpha' = 44.1^\circ \quad \therefore \quad \boxed{\alpha = 45.9^\circ}$$

http://ingesolucionarios.blogspot.com

# CHAPTER 11

http://ingesolucionarios.blogspot.com Edu_Zegarr_ch

http://ingesolucionarios.blogspot.com

Indicate whether the following regions are simply or multiply connected:
(*a*) The region between a solid sphere and an enveloping spherical shell
(*b*) The region between two tubes
(*c*) The region between two tubes with end *A* closed
(*d*) The region inside the big tube and inside the little tube with end *A* open

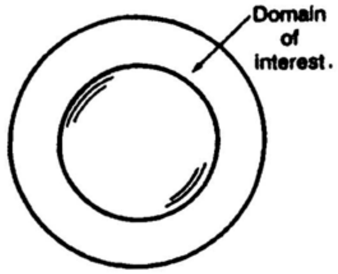


(*a*)

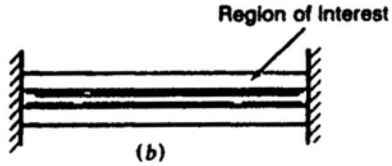


(*b*)

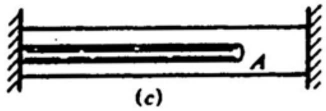


(*c*)

a) Simply connected

b) Multiply connected

c) Simply connected

d) Simply connected


http://ingesolucionarios.blogspot.com
Edu_Zegarr_ch

 http://ingesolucionarios.blogspot.com

Given the following velocity field

$$\mathbf{V} = 2x^2y\mathbf{i} + 2y^2x\mathbf{j} + 10\mathbf{k} \text{ m/s}$$

what is the circulation $\Gamma$ around a square path in the $xy$ plane about the origin at the center of the square? The square is 2 m per side. What can you say about curl **V**?

$$\Gamma = \oint \vec{V} \cdot d\vec{l} = \oint (V_x\,dx + V_y\,dy + V_z\,dz)$$

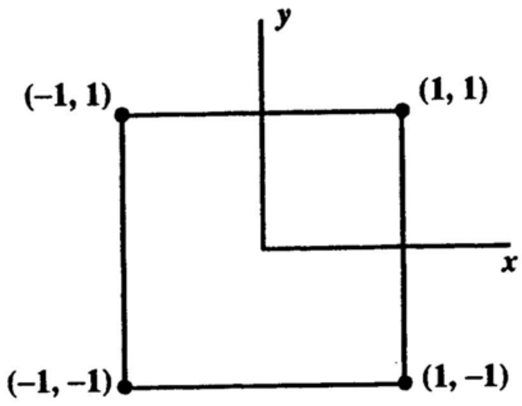


$$\therefore \quad \Gamma = \oint (2x^2y\,dx + 2y^2x\,dy + 10\,dz)$$

$$= \int_{-1}^{1} 2y^2x\big|_{x=1}\,dy + \int_{1}^{-1} 2x^2y\big|_{y=1}dx + \int_{1}^{-1} 2y^2x\big|_{x=1}dy + \int_{-1}^{1} 2x^2y\big|_{y=-1}dx$$

$$= \int_{-1}^{1} 2y^2dy + \int_{1}^{-1} 2x^2dx - \int_{1}^{-1} 2y^2dy - \int_{-1}^{1} 2x^2dx$$

$$= \frac{2y^3}{3}\bigg|_{-1}^{1} + \frac{2x^3}{3}\bigg|_{1}^{-1} - \frac{2y^3}{3}\bigg|_{1}^{-1} - \frac{2x^3}{3}\bigg|_{-1}^{1}$$

$$\Gamma = \frac{4}{3} - \frac{4}{3} + \frac{4}{3} - \frac{4}{3} = 0$$

$$\therefore \quad (curl\,\vec{V})_z = 0$$

http://ingesolucionarios.blogspot.com

http://ingesolucionarios.blogspot.com

11.3

A stream function $\psi$ is given as $\psi = -(x^2 + 2xy + 4t^2y)$. When $t = 2$, what is the flow rate across the semicircular path shown in Fig. P12.3? What is the flow across the $x$ axis from $A$ to $x = 10$?

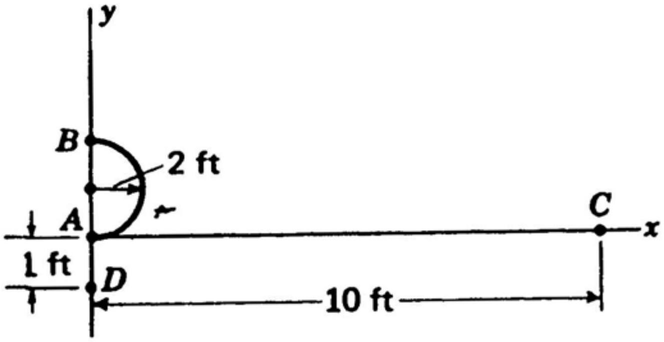


$$\psi = -(x^2+2xy+4t^2y)$$

$$q_{A\to B} = (\psi)_B - (\psi)_A = -(4t^2)(4) - 0$$

At $t = 2$ ,

$$q_{A\to B} = -64 \ c.f.s.$$

Also:

$$q_{10,A} = -(x^2) = -100 \ c.f.s.$$

11.4

In Prob. 11.3 point $A$, the origin of $xy$, has been used as the anchor point. Suppose that we use point $D$ at $y = -1$ as the anchor point. What will be the difference between the flows through paths to points $B$ and $C$ from the new anchor point as compared with using the old anchor point at any time $t$?

$$\psi_{DA} = -\ 4t^2(-1)\ -\ 0 =\ \ 4t^2$$

Difference from old anchor point and new anchor point is $4t^2$ .

11.5

Show that $V_y = -\partial\psi/\partial x$.

$$\psi_{x_0y_0}(x,y,t) + \frac{\partial\psi(x,y,t)}{\partial x}\,dx = \psi_{x_0y_0}(x,y,t) - V_y dx$$

$$\therefore \quad V_y = -\frac{\partial\psi}{\partial x}$$

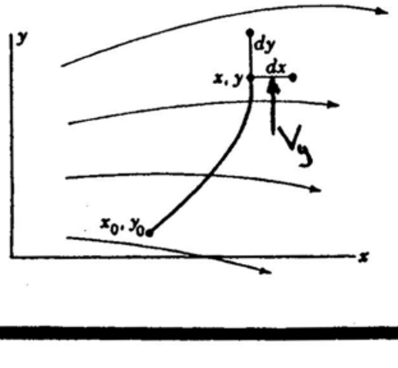

http://ingesolucionarios.blogspot.com

11.6

If the stream function of a flow is $\psi = -2xy$, what is the velocity at position $x = 2$, $y = 5$?

$$\psi = -2xy$$

$$V_x = \frac{\partial \psi}{\partial y} = -2x$$

$$V_y = -\frac{\partial \psi}{\partial x} = 2y$$

$$\therefore \quad \vec{V} = -2x\,\hat{i} + 2y\,\hat{j}$$

At (2,5) we have:

$$\vec{V} = -4\,\hat{i} + 10\,\hat{j}$$

11.7

In Prob. 11.6 sketch the streamline pattern. What is the significance of the spacing between your streamlines?

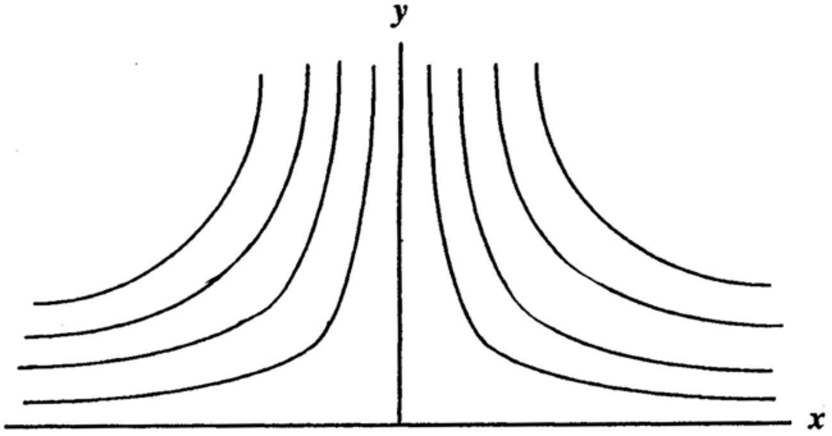


rectangular
hyperbolae

The greater the spacing for incompressible flow, the smaller the speed.

11.8 http://ingesolucionarios.blogspot.com

If the flow in Prob. 11.6 is irrotational, what should the proper velocity potential be within a constant?

$$\psi = -2xy$$

$$\frac{\partial \psi}{\partial y} = -2x = \frac{\partial \phi}{\partial x} \qquad \text{(a)}$$

$$\frac{\partial \psi}{\partial x} = -2y = -\frac{\partial \phi}{\partial y} \qquad \text{(b)}$$

Integrating each equation:

$$\phi = -x^2 + f(y)$$

$$\phi = y^2 + g(x)$$

Comparing equations we conclude:

$$\phi = -x^2 + y^2 + C$$

The contour lines are a set of hyperbolae.

11.9

Sketch the flow net for the flow given in Prob. 11.6.

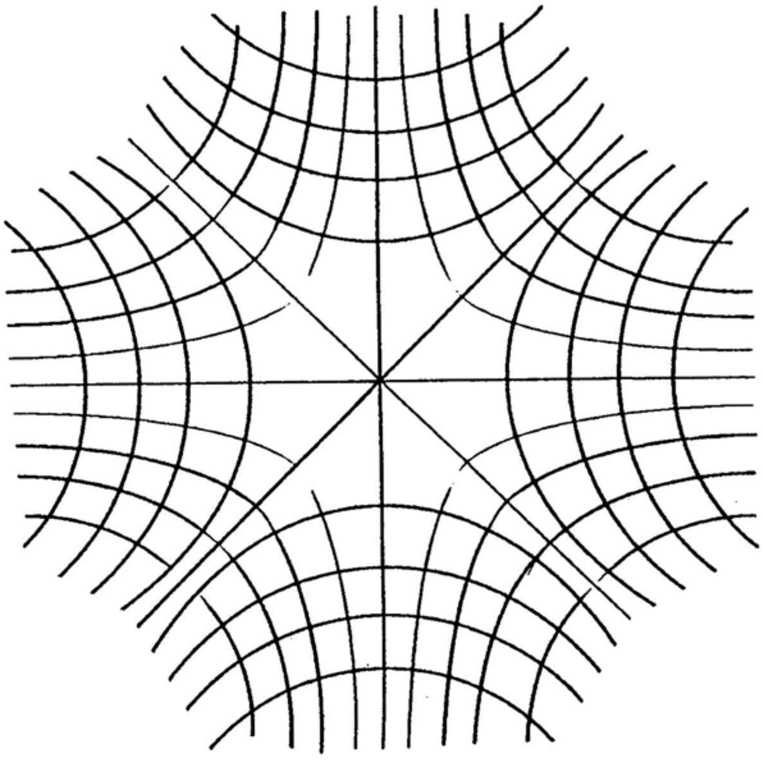

http://ingesolucionarios.blogspot.com

## 11.11

Show that $\phi = (\Lambda/2\pi)\ln r$ is a harmonic function.

$$\phi = \frac{\Lambda}{2\pi}\ln r$$

$$\nabla^2\phi = \frac{1}{r}\,\frac{\partial\left(r\,\dfrac{\partial\phi}{\partial r}\right)}{\partial r} + \frac{1}{r^2}\,\frac{\partial^2\phi}{\partial\theta^2} = 0$$

$$\nabla^2\phi = \frac{1}{r}\,\frac{\partial\left[r\left(-\dfrac{\Lambda}{2\pi}\right)\dfrac{1}{r}\right]}{\partial r} = \frac{1}{r}\,\frac{\partial\left(-\dfrac{\Lambda}{2\pi}\right)}{\partial r}$$

$$\nabla^2\phi = 0$$

## 11.12

Consider the potential function

$$\phi = -A(x^2 - y^2).$$

Show that it is a harmonic function. What is the stream function $\psi$? Express this stream function in polar coordinates. Draw the flow net. Is there a stagnation point? If so, where? Is there a singular point? If so, where?

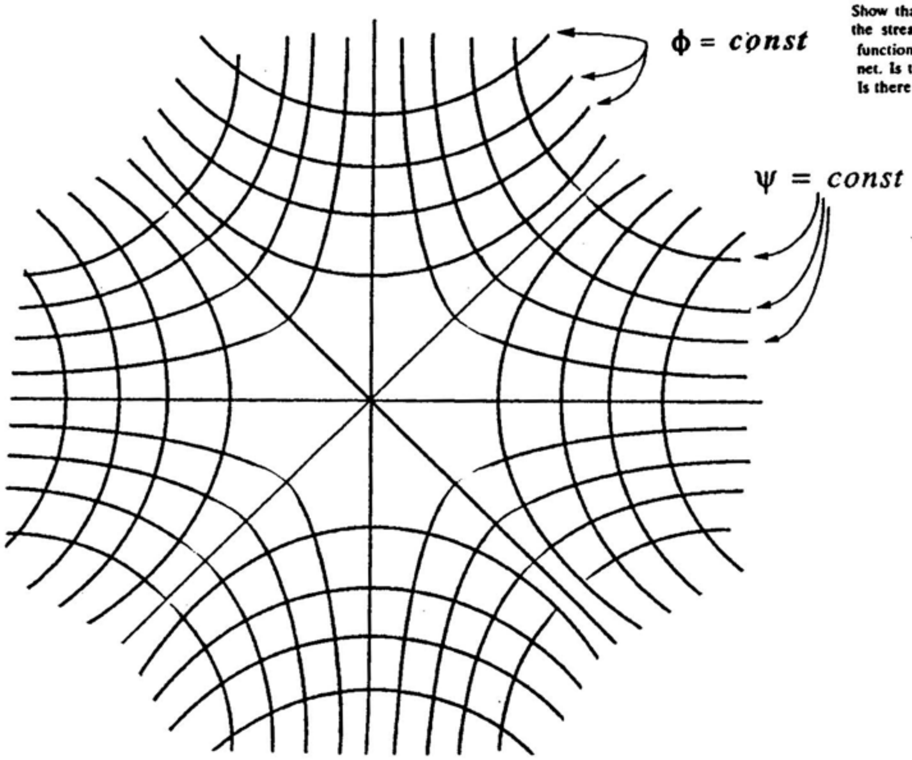

http://ingesolucionarios.blogspot.com

a) $\dfrac{\partial^2\phi}{\partial x^2} + \dfrac{\partial^2\phi}{\partial y^2} = 0$ Laplace's Eq.

(cont.)

$$\therefore \left(\frac{\partial^2}{\partial x^2} + \frac{\partial^2}{\partial y^2}\right)(A)\,(-x^2 + y^2) = -2A + 2A = 0$$

$\therefore\ \nabla^2\phi = 0$ , $\phi$ is harmonic.

b)

$$\frac{\partial\psi}{\partial y} = \frac{\partial\phi}{\partial x} \qquad \psi = \int \frac{\partial\phi}{\partial x}\,dy + g(x) = -\int 2Ax\,dy + g(x)$$

$$\frac{\partial\psi}{\partial x} = -\frac{\partial\phi}{\partial y} \qquad \psi = -\int \frac{\partial\phi}{\partial y}\,dx + h(y) = -\int 2Ay\,dx + h(y)$$

$$\therefore \begin{cases} \psi = -2Axy + g(x) \\ \phi = -2Axy + h(x) \end{cases} \qquad g(x) = h(x)$$

$$\psi = -2Axy$$

c) $\psi = -2Ar\cos\theta\ r\ \sin\theta = -2Ar^2\cos\theta\sin\theta$

d) $V_x = \dfrac{\partial\phi}{\partial x} = -2Ax \qquad V_y = \dfrac{\partial\phi}{\partial y} = 2Ay$

$\therefore$ Stagnation point at **origin**.

e) No singular point except at $\infty$ .

http://ingesolucionarios.blogspot.com

11.13

Show that the stream function for $\phi = (\Lambda\theta/2\pi)$ is $\psi = -(\Lambda/2\pi)\ln r$. (This is the simple vortex.)

$$\phi = \frac{\Lambda\theta}{2\pi}$$

$$\frac{\partial\psi}{r\partial\theta} = \frac{\partial\phi}{\partial r} = 0 \qquad \text{(a)}$$

$$\frac{\partial\psi}{\partial r} = -\frac{\partial\phi}{r\partial\theta} = -\frac{\Lambda}{2\pi r} \qquad \text{(b)}$$

$$\begin{cases} \psi = \int r\left(\frac{\partial\phi}{\partial r}\right)d\theta + f(r) \\ \psi = -\int\left(\frac{\partial\phi}{r\partial\theta}\right)dr + g(\theta) \end{cases}$$

$$\begin{cases} \psi = 0 + f(r) \\ \psi = \int -\frac{\Lambda}{2\pi r}\,dr + g(\theta) = -\frac{\Lambda}{2\pi}\ln r + g(\theta) \end{cases}$$

Compare.

$$f(r) = -\frac{\Lambda}{2\pi}\ln r \qquad g(\theta) = 0$$

$$\therefore \quad \boxed{\psi = -\frac{\Lambda}{2\pi}\ln r}$$


http://ingesolucionarios.blogspot.com Edu_Zegarr_ch

http://ingesolucionarios.blogspot.com

11.14

Show that the stream function for $\phi = (\chi \cos\theta)/r$ is $\psi = -(\chi \sin\theta)/r$. (This is a doublet.)

$$\phi = \frac{\chi \cos\theta}{r}$$

$$\frac{\partial\psi}{r\partial\theta} = \frac{\partial\phi}{\partial r} = -\frac{\chi\cos\theta}{r^2} \qquad \text{(a)}$$

$$\frac{\partial\psi}{\partial r} = -\frac{\partial\phi}{r\partial\theta} = \frac{\chi\sin\theta}{r^2} \qquad \text{(b)}$$

Integrating (a) and (b) we get:

$$\psi = r\left[-\frac{\chi\sin\theta}{r^2} + g(r)\right]$$

$$\psi = -\frac{\chi\sin\theta}{r} + h(\theta)$$

Comparing the equations we conclude that

$$\psi = -\frac{\chi\sin\theta}{r}$$

if we disregard the arbitrary constant.

11.15

Demonstrate that the circulation around a doublet is zero. See Prob. 11.14.

$$\Gamma = \oint \vec{V}\cdot d\vec{l} = \int_0^{2\pi} V_\theta r\, d\theta$$

$$V_\theta = \frac{\partial\phi}{r\partial\theta} = -\frac{1}{r^2}\chi\sin\theta$$

Substituting, we get using a unit circle:

$$\Gamma = \int_0^{2\pi}\left(-\frac{1}{1}\right)\chi\sin\theta\,(1)d\theta = \chi\cos\theta\Big|_0^{2\pi} = 0$$

Show that the function $\phi = -(\Lambda/r^2)\cos 2\theta$ is harmonic and that the stream function for this potential is $(\Lambda/r^2)\sin 2\theta$. What is the flow net for this flow? *Hint:* Consult your text on analytic geometry for its discussion on lemniscates.

$$\phi = -\frac{\Lambda}{r^2}\cos 2\theta$$

a) Show $\nabla^2\phi = 0$

$$\nabla^2\phi = \frac{1}{r}\frac{\partial\left(\frac{r\partial\phi}{\partial r}\right)}{\partial r} + \frac{1}{r^2}\frac{\partial^2\phi}{\partial\theta^2} = \frac{1}{r}\frac{\partial\left(\frac{2\Lambda}{r^2}\cos 2\theta\right)}{\partial r} + \left(\frac{1}{r^2}\right)\left(\frac{\Lambda}{r^2}4\cos 2\theta\right)$$

$$= -4\frac{\Lambda\cos 2\theta}{r^4} + \frac{4\Lambda\cos 2\theta}{r^4} = 0$$

$$\therefore\quad \nabla^2\phi = 0$$

b)

$$\frac{\partial\psi}{r\partial\theta} = \frac{\partial\phi}{\partial r} = \frac{2\Lambda}{r^3}\cos 2\theta$$

$$\frac{\partial\psi}{\partial r} = -\frac{1}{r}\frac{\partial\phi}{\partial\theta} = -\frac{2\Lambda}{r^3}\sin 2\theta$$

Integrating the equations we have:

$$\psi = r\left[\frac{\Lambda}{r^3}\sin 2\theta + g(r)\right]$$

$$\psi = \frac{\Lambda}{r^2}\sin 2\theta + h(\theta)$$

Comparing the equations we conclude that:

$$\psi = \frac{\Lambda}{r^2}\sin 2\theta$$

c) Consider

$$-\frac{\Lambda}{r^2}\cos 2\theta = const.$$

$$\frac{\Lambda}{r^2}\sin 2\theta = const.$$

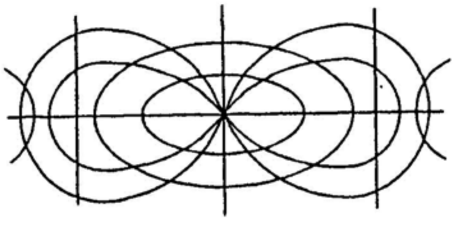

These potential lines are lemniscapes. (See Eq. 11, pg. 265, **Calculus and Analytic Geometry**, by Thomas.)



http://ingesolucionarios.blogspot.com Edu_Zegarr_ch

http://ingesolucionarios.blogspot.com

11.17

In Example 3.1 we presented the following two-dimensional velocity field:

$$V_x = -Ax$$
$$V_y = Ay$$

where $A$ is a constant. Is the flow irrotational? Does it satisfy continuity? Determine $\phi$ and $\psi$ if the answers to these questions are "yes."

$$curl\ \vec{V} = \frac{1}{2}\left(\frac{\partial V_x}{\partial y} - \frac{\partial V_y}{\partial x}\right)\hat{k} = \frac{1}{2}(0+0)\hat{k} = \vec{0}$$

∴ Irrotational

Look at **continuity**

$$\frac{\partial V_x}{\partial x} + \frac{\partial V_y}{\partial y} = 0 \qquad -A + A = 0$$

∴ Satisfies continuity.

**Compute $\phi$**

$$\frac{\partial \phi}{\partial x} = -Ax \qquad \phi = -A\frac{x^2}{2} + h(y) \tag{1}$$

$$\frac{\partial \phi}{\partial y} = Ay \qquad \phi = A\frac{y^2}{2} + g(x) \tag{2}$$

$$\therefore \boxed{\phi = -A\frac{x^2}{2} + A\frac{y^2}{2} = \frac{A}{2}(y^2 - x^2)}$$

For $\psi$

$$\frac{\partial \psi}{\partial y} = -Ax \qquad \psi = -Ayx + h(x) \tag{3}$$

$$\frac{\partial \psi}{\partial x} = -Ay \qquad \psi = -Ayx + g(y) \tag{4}$$

$$\therefore \boxed{\psi = -Ayx}$$

11.18

http://ingesolucionarios.blogspot.com

A two-dimensional flow has the following velocity field:

$$\mathbf{V} = x^2\mathbf{i} + (-2xy + 4x)\mathbf{j}\ \text{m/s}$$

Is this an irrotational flow? Does it satisfy continuity? If so, what is $\psi$ up to an arbitrary constant?

**Examine** ***curl*** $\vec{V}$

$$curl\ \vec{V} = \frac{1}{2}\left(\frac{\partial V_x}{\partial y} - \frac{\partial V_y}{\partial x}\right)\hat{k} + \vec{0}$$

$$= \frac{1}{2}[0 - (-2y+4)] \neq 0$$

$\therefore$ **Not irrotational.**

Look at **continuity.**

$$\frac{\partial V_x}{\partial x} + \frac{\partial V_y}{\partial y} \stackrel{?}{=} 0$$

$$2x + (-2x + 0) = 0$$

$\therefore$ We satisfy **continuity**. $\psi$ exists.

$$\frac{\partial \psi}{\partial y} = x^2$$

$$\psi = x^2 y + g(x) \qquad (1)$$

$$\frac{\partial \psi}{\partial x} = -V_y = 2xy - 4x$$

$$\psi = \frac{2x^2 y}{2} - \frac{4x^2}{2} + h(y) \qquad (2)$$

$\therefore \quad g(x) = -2x^2 \qquad h(y) = 0$

$$\boxed{\psi = x^2 y - 2x^2}$$



http://ingesolucionarios.blogspot.com Edu_Zegarr_ch

 http://ingesolucionarios.blogspot.com

Consider the potential function

$$\phi = A(x^2 - y^2)$$

Show that it is a harmonic function. What is the stream function $\psi$? Express this stream function in polar coordinates. Draw the flow net. Is there a stagnation point? If so, where?

a) Laplace's Eq.

$$\frac{\partial^2\phi}{\partial x^2} + \frac{\partial^2\phi}{\partial y^2} = 0$$

$$2A - 2A = 0 \qquad \phi \;\; \textit{harmonic}$$

b)

$$\frac{\partial\psi}{\partial y} = \frac{\partial\phi}{\partial x} \qquad \frac{\partial\psi}{\partial x} = -\frac{\partial\phi}{\partial y}$$

$$\therefore \quad \psi = \int 2Ax\,dy + h(x) = 2Axy + h(x)$$

$$\psi = -\int -2Ay\,dx + g(y) = 2Axy + g(y)$$

$$g(y) = h(x) = 0$$

$$\therefore \quad \boxed{\psi = 2Axy}$$

c)

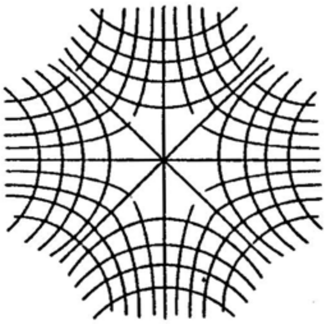

d)

$$\frac{\partial\phi}{\partial x} = V_x = 2Ax \qquad \textit{Stagnation point at origin}$$

$$\frac{\partial\phi}{\partial y} = V_y = -2Ay$$

e) No singular point.

http://ingesolucionarios.blogspot.com

11.20

A velocity potential $\phi$ is given as

$$\phi = 5x^2y + 10yz^3 + 3zt^2 \ m^2/s$$

Formulate the acceleration field.

$$\vec{V} = \frac{\partial\phi}{\partial x}\hat{i} + \frac{\partial\phi}{\partial y}\hat{j} + \frac{\partial\phi}{\partial z}\hat{k}$$

$$\vec{V} = (10xy)\hat{i} + (5x^2+10z^3)\hat{j} + (3t^2+30yz^2)\hat{k}$$

$$\vec{a} = V_x\frac{\partial\vec{V}}{\partial x} + V_y\frac{\partial\vec{V}}{\partial y} + V_z\frac{\partial\vec{V}}{\partial z} + \frac{\partial\vec{V}}{\partial t}$$

$$= (10xy)(10y\hat{i}+10x\hat{j}) + (5x^2+10z^3)(10x\hat{i}+30z^2\hat{k})$$

$$+ (3t^2+30yz^2)(30z^2\hat{j}+60yz\hat{k}) + 6t\hat{k}$$

$$\vec{a} = (100xy^2 + 50x^3 + 100z^3x)\hat{i}$$

$$+ (100x^2y + 90t^2z^2 + 900yz^4)\hat{j}$$

$$+ (150x^2z^2 + 300z^5 + 180yt^2z + 1{,}800y^2z^3 + 6t)\hat{k}$$

11.21

Show that the curl of any potential flow must be zero by examining curl($\nabla\phi$).

$$curl\,(\nabla\phi) = curl\left(\frac{\partial\phi}{\partial x}\hat{i} + \frac{\partial\phi}{\partial y}\hat{j} + \frac{\partial\phi}{\partial z}\hat{k}\right)$$

NOTE $$curl\,\vec{A} = \left(\frac{\partial A_z}{\partial y} - \frac{\partial A_y}{\partial z}\right)\hat{i} + \left(\frac{\partial A_x}{\partial z} - \frac{\partial A_z}{\partial x}\right)\hat{j} + \left(\frac{\partial A_y}{\partial x} - \frac{\partial A_x}{\partial y}\right)\hat{k}$$

$$\therefore \quad curl\,(\nabla\phi) = \left[\frac{\partial}{\partial y}\left(\frac{\partial\phi}{\partial z}\right) - \frac{\partial}{\partial z}\left(\frac{\partial\phi}{\partial y}\right)\right]\hat{i} + \left[\frac{\partial}{\partial z}\left(\frac{\partial\phi}{\partial x}\right) - \frac{\partial}{\partial x}\left(\frac{\partial\phi}{\partial z}\right)\right]\hat{j} + \left[\frac{\partial}{\partial x}\left(\frac{\partial\phi}{\partial y}\right) - \frac{\partial}{\partial y}\left(\frac{\partial\phi}{\partial x}\right)\right]\hat{k}$$

$$curl\,(\nabla\phi) = \left(\frac{\partial^2\phi}{\partial y\partial z} - \frac{\partial^2\phi}{\partial z\partial y}\right)\hat{i} + \left(\frac{\partial^2\phi}{\partial z\partial x} - \frac{\partial^2\phi}{\partial x\partial z}\right)\hat{j} + \left(\frac{\partial^2\phi}{\partial x\partial y} - \frac{\partial^2\phi}{\partial y\partial x}\right)\hat{k}$$

If the partial derivatives are continuous, then we can interchange order of partial derivatives.

$$\therefore \quad curl(\nabla\phi) = \vec{0}$$



http://ingesolucionarios.blogspot.com Edu_Zegarr_ch

http://ingesolucionarios.blogspot.com

If the velocity field is given as

$$\mathbf{V} = (2x^2 + 3y)\mathbf{i} + 10yz^2\mathbf{j} + 10z^2t\mathbf{k}$$

is the flow irrotational? If not, what is the curl V?

Take *curl* $\vec{V}$ .

$$curl\ \vec{V} = \left(\frac{\partial V_z}{\partial y} - \frac{\partial V_y}{\partial z}\right)\hat{i} + \left(\frac{\partial V_x}{\partial z} - \frac{\partial V_z}{\partial x}\right)\hat{j} + \left(\frac{\partial V_y}{\partial x} - \frac{\partial V_x}{\partial y}\right)\hat{k}$$

$$= \left[\frac{\partial}{\partial y}(10z^2t) - \frac{\partial}{\partial z}(10yz^2)\right]\hat{i}$$

$$+ \left[\frac{\partial}{\partial z}(2x^2+3y) - \frac{\partial}{\partial x}(10z^2t)\right]\hat{j}$$

$$+ \left[\frac{\partial}{\partial x}(10yz^2) - \frac{\partial}{\partial y}(2x^2+3y)\right]\hat{k}$$

$$curl\ \vec{V} = [0 - 20yz]\hat{i} + [0 + 0]\hat{j} + [0 - 3]\hat{k}$$

$$curl\ \vec{V} = -20yz\hat{i} - 3\hat{k} \quad \text{sec}^{-1}$$

 http://ingesolucionarios.blogspot.com

If we have an irrotational steady flow with the following velocity field:

$$\mathbf{V} = 2x\mathbf{i} + 2\mathbf{j} \text{ m/s}$$

what is the velocity potential up to an undetermined constant?

$$\begin{cases} \dfrac{\partial \phi}{\partial x} = 2x \\ \dfrac{\partial \phi}{\partial y} = 2 \\ \dfrac{\partial \phi}{\partial z} = 0 \end{cases}$$

Each integration yields functions of integration.

$$\begin{cases} \phi = \dfrac{2x^2}{2} + f(y,z) + C_1 \\ \phi = 2y + g(x,z) + C_2 \\ \phi = h(x,y) + C_3 \end{cases}$$

But comparing the three results we conclude for the same $\phi$ in all three cases:

$$\begin{cases} f(y,z) = 2y \qquad C_1 = C_2 = C_3 = C \\ g(x,z) = x^2 \\ h(x,y) = x^2 + 2y \end{cases}$$

$$\therefore \quad \boxed{\therefore \quad \phi = x^2 + 2y + C}$$



http://ingesolucionarios.blogspot.com Edu_Zegarr_ch

11.24

Which of the following functions could be stream functions or velocity potentials for two-dimensional potential flows?
(a) $x^2 - y^2$
(b) $\sin(x + y)$
(c) $\ln(x - y)$
(d) $K \ln r$
(e) $D\theta$

a) $$\frac{\partial^2}{\partial x^2}(x^2-y^2) + \frac{\partial^2}{\partial y^2}(x^2-y^2) \stackrel{?}{=} 0 \qquad 2-2=0$$

$\therefore$ $x^2-y^2$ is harmonic and can be $\phi$ or $\psi$ for 2-D potential flow.

b)

$$\frac{\partial^2}{\partial x^2}\sin(x+y) + \frac{\partial^2}{\partial y^2}\sin(x+y) \stackrel{?}{=} 0$$

$$\frac{\partial}{\partial x}\cos(x+y) + \frac{\partial}{\partial y}\cos(x+y) \stackrel{?}{=} 0$$

$$-\sin(x+y) - \sin(x+y) \neq 0$$

$\therefore$ Does not qualify.

c)

$$\frac{\partial^2}{\partial x^2}\ln(x-y) + \frac{\partial^2}{\partial y^2}\ln(x-y) \stackrel{?}{=} 0$$

$$\frac{\partial}{\partial x}\left(\frac{1}{x-y}\right) - \frac{\partial}{\partial y}\left(\frac{1}{x-y}\right) \stackrel{?}{=} 0$$

$$-\frac{1}{(x-y)^2} + \frac{-1}{(x-y)^2} \neq 0$$

$\therefore$ $\ln(x-y)$ does not qualify for $\phi$ or $\psi$.

d) $$\nabla^2 = \frac{1}{\bar{r}}\frac{\partial\left(\bar{r}\frac{\partial}{\partial \bar{r}}\right)}{\partial \bar{r}} + \frac{1}{\bar{r}^2}\frac{\partial^2}{\partial \theta^2} + \frac{\partial^2}{\partial z^2}$$

http://ingesolucionarios.blogspot.com

11.24 **(cont.)**

$$\therefore \quad \nabla^2(K\ln\bar{r}) = \frac{K}{\bar{r}}\frac{\partial\left(\bar{r}\dfrac{1}{\bar{r}}\right)}{\partial\bar{r}} \stackrel{?}{=} 0$$

$$\nabla^2(K\ln\bar{r}) = \frac{K}{\bar{r}}\frac{\partial}{\partial\bar{r}}(1) = 0$$

$\therefore$ $K\ln r$ qualifies for $\phi$ or $\psi$ .

e)

$$\nabla^2(D\theta) = \frac{D}{\bar{r}^2}\frac{\partial^2}{\partial\theta^2}(\theta) = 0$$

$\therefore$ $D\theta$ qualifies for $\phi$ or $\psi$ .

11.25

If $\phi_1$ and $\phi_2$ are harmonic, show that for

$$\phi = C\phi_1 + D\phi_2 + E$$

then $\phi$ is also harmonic if $C$, $D$, and $E$ are constants.

$$\nabla^2\phi = \frac{\partial^2}{\partial x^2}(C\phi_1 + D\phi_2 + E) + \frac{\partial^2}{\partial y^2}(C\phi_1 + D\phi_2 + E) \stackrel{?}{=} 0$$

$$= \left(C\frac{\partial^2\phi_1}{\partial x^2} + D\frac{\partial^2\phi_2}{\partial x^2} + 0\right) + \left(C\frac{\partial^2\phi_1}{\partial y^2} + D\frac{\partial^2\phi_2}{\partial y^2} + 0\right) \stackrel{?}{=} 0$$

$$\therefore \quad C\left(\frac{\partial^2\phi_1}{\partial x^2} + \frac{\partial^2\phi_1}{\partial y^2}\right) + D\left(\frac{\partial^2\phi_2}{\partial x^2} + \frac{\partial^2\phi_2}{\partial y^2}\right) \stackrel{?}{=} 0$$

$$\therefore \quad C(0) + D(0) = 0$$

$\therefore$ $\phi$ is harmonic.

http://ingesolucionarios.blogspot.com Edu_Zegarr_ch

11.26

For any two-dimensional incompressible flow (not necessarily irrotational) show that the vorticity vector $\omega$ has the magnitude equal to $\frac{1}{2}\nabla^2\psi$.

$$\vec{\omega} = \frac{1}{2} \, curl \, \vec{V}$$

For 2-d flow in $xy$ plane

$$\vec{\omega} = \frac{1}{2}\left(\frac{\partial V_y}{\partial x} - \frac{\partial V_x}{\partial y}\right)\hat{k}$$

But

$$\begin{cases} V_y = -\dfrac{\partial \psi}{\partial x} \\ V_x = \dfrac{\partial \psi}{\partial y} \end{cases}$$

$$\therefore \quad \vec{\omega} = \frac{1}{2}\left(-\frac{\partial^2 \psi}{\partial x^2} - \frac{\partial^2 \psi}{\partial y^2}\right)\hat{k}$$

$$\therefore \quad |\vec{\omega}| = \frac{1}{2}\nabla^2\psi$$

We examined the laminar flow between two parallel infinite plates and found that

$$u = \frac{\beta}{2\mu}(h^2 - y^2)$$

What is the stream function $\psi$ for this flow?

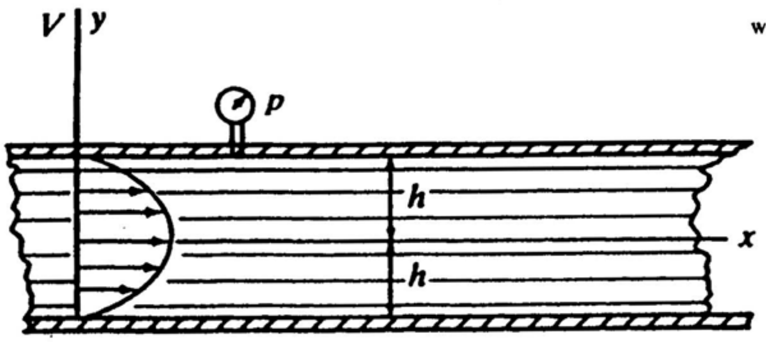


We know that

$$V_x = \frac{\partial \psi}{\partial y}$$

$$\therefore \quad \frac{\beta}{2\mu}(h^2 - y^2) = \frac{\partial \psi}{\partial y}$$

$$\psi = \frac{\beta}{2\mu}\left(h^2 y - \frac{y^3}{3}\right) + f(x)$$

But $\qquad V_y = 0$

$$\therefore \quad \frac{\partial \psi}{\partial x} = 0$$

$$\therefore \quad \frac{\partial f}{\partial x} = 0$$

Hence $f$ can only be a constant.

$$\psi = \frac{\beta}{2\mu}\left(h^2 y - \frac{y^3}{3}\right) + C_1$$

http://ingesolucionarios.blogspot.com

We examined Couette flow. Recall that here the flow between two infinite parallel plates is instituted by moving the upper plate. For viscous fluids we found that

$$\frac{u}{U} = \frac{y}{h} - \left[\frac{h^2}{2\mu U}\frac{\partial p}{\partial x}\right]\frac{y}{h}\left(1 - \frac{y}{h}\right)$$

What is the stream function?

$$V_x = \frac{\partial \psi}{\partial y}$$

$$\therefore \quad \frac{\partial \psi}{\partial y} = U\left\{\frac{y}{h} - \left[\frac{h^2}{2\mu U}\left(\frac{\partial p}{\partial x}\right)\right]\left(\frac{y}{h}\right)\left(1 - \frac{y}{h}\right)\right\}$$

Let $\frac{h^2}{2\mu U}\frac{\partial p}{\partial x} = C_1$ a constant.

$$\therefore \quad \frac{\partial \psi}{\partial y} = U\left\{\frac{y}{h} - C_1\left[\frac{y}{h} - \left(\frac{y}{h}\right)^2\right]\right\}$$

Integrate

$$\psi = U\left\{\frac{y^2}{2h} - C_1\left[\frac{y^2}{2h} - \frac{y^3}{3h^2}\right]\right\} + f(x)$$

But

$$V_y = 0$$

$$\therefore \quad \frac{\partial \psi}{\partial x} = 0$$

$$\therefore \quad \frac{\partial f}{\partial x} = 0$$

$$f = const. = C_2$$

$$\boxed{\psi = U\left\{\frac{y^2}{2h} - \left[\frac{h^2}{2\mu U}\left(\frac{\partial p}{\partial x}\right)\right]\left[\frac{y^2}{2h} - \frac{y^3}{3h^2}\right]\right\} + C_2}$$

 http://ingesolucionarios.blogspot.com

A two-dimensional potential flow is shown flowing radially in toward a small opening. What is the velocity potential for the flow if 15 $m^3/s$ is flowing into the opening per unit length of the opening?

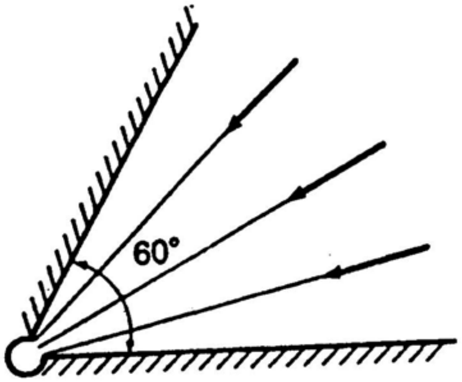


We can use the same velocity potential as that of the sink. Thus

$$\phi = -\frac{\Lambda}{2\pi}\ln r$$

$$\therefore \quad V_r = \frac{\partial\phi}{\partial r} = -\frac{\Lambda}{2\pi r}$$

To find $\Lambda$ we use continuity at any position $R$. Thus

$$-15 = \int_0^{\frac{\pi}{3}} V_r R\, d\theta = -\frac{\Lambda}{2\pi}\int_0^{\frac{\pi}{3}} \frac{1}{R} R\, d\theta$$

$$15 = \frac{\Lambda}{2\pi}\left(\frac{\pi}{3}\right) = \frac{\Lambda}{6}$$

$$\Lambda = 90$$

$$\therefore \quad \phi = -\frac{90}{2\pi}\ln r = -\frac{45}{\pi}\ln r$$

http://ingesolucionarios.blogspot.com

If $\phi = -\Lambda r^{\pi/\alpha}\sin(\pi\theta/\alpha)$, show that it satisfies Laplace's equation and that $\phi = -\Lambda r^{\pi/\alpha}\cos(\pi\theta/\alpha)$. Show that this may represent a flow over a straight boundary as shown

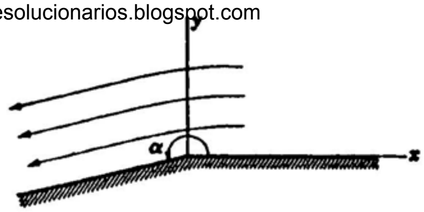


$$\psi = -\Lambda r^{\frac{\pi}{\alpha}}\sin\left(\frac{\pi\theta}{\alpha}\right)$$

a) Show $\nabla^2\psi = 0$

$$\nabla^2\psi = \frac{1}{r}\frac{\partial}{\partial r}\left[r\frac{\partial\left(-\Lambda r^{\frac{\pi}{\alpha}}\sin\frac{\pi\theta}{\alpha}\right)}{\partial r}\right] + \frac{1}{r^2}\frac{\partial^2\left(-\Lambda r^{\frac{\pi}{\alpha}}\sin\frac{\pi\theta}{\alpha}\right)}{\partial\theta^2}$$

$$= \frac{1}{r}\frac{\partial}{\partial r}\left[-r\Lambda\frac{\pi}{\alpha}r^{\frac{\pi}{\alpha}-1}\sin\left(\frac{\pi\theta}{\alpha}\right)\right] + \frac{1}{r^2}\left[\Lambda r^{\frac{\pi}{\alpha}}\left(\frac{\pi}{\alpha}\right)^2\sin\left(\frac{\pi\theta}{\alpha}\right)\right]$$

$$= -\frac{1}{r}\Lambda\left(\frac{\pi}{\alpha}\right)^2 r^{\frac{\pi}{\alpha}-1}\sin\left(\frac{\pi\theta}{\alpha}\right) + \Lambda\left(\frac{\pi}{\alpha}\right)^2 r^{\left(\frac{\pi}{\alpha}-2\right)}\sin\left(\frac{\pi\theta}{\alpha}\right)$$

Clearly

$$\nabla^2\psi = 0$$

b)

$$\frac{\partial\phi}{\partial r} = \frac{\partial\psi}{r\partial\theta} = \frac{1}{r}\left[-\Lambda r^{\frac{\pi}{\alpha}}\frac{\pi}{\alpha}\cos\frac{\pi\theta}{\alpha}\right]$$

$$\frac{\partial\phi}{r\partial\theta} = -\frac{\partial\psi}{\partial r} = \frac{\pi}{\alpha}r^{\left(\frac{\pi}{\alpha}-1\right)}\sin\frac{\pi\theta}{\alpha}$$

Integrating we have:

$$\phi = -\Lambda\frac{\pi}{\alpha}\cos\frac{\pi\theta}{\alpha}r^{\frac{\pi}{\alpha}}\left(\frac{\alpha}{\pi}\right) + g(\theta)$$

$$\phi = r\left[-\Lambda\frac{\pi}{\alpha}r^{\left(\frac{\pi}{\alpha}-1\right)}\left(\cos\frac{\pi}{\alpha}\theta\right)\left(\frac{\alpha}{\pi}\right) + h(r)\right]$$

http://ingesolucionarios.blogspot.com

http://ingesolucionarios.blogspot.com

**(cont.)**

Comparing results we see that:

$$\phi = -\Lambda r^{\frac{\pi}{\alpha}} \cos \frac{\pi\theta}{\alpha}$$

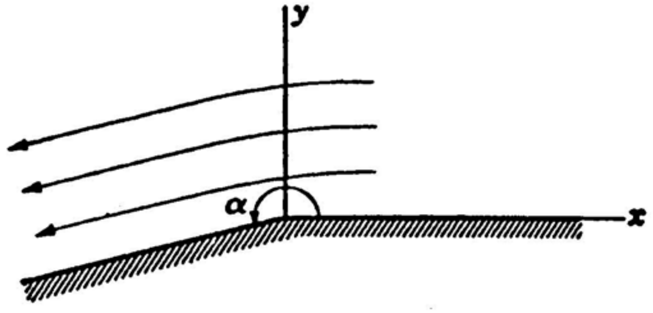


c) $$V_\theta = -\frac{\partial\psi}{\partial r} = \Lambda \frac{\pi}{\alpha} r^{\left(\frac{\pi}{\alpha} - 1\right)} \sin \frac{\pi\theta}{\alpha}$$

When $\theta = 0$ , $V_\theta = 0$ and so we satisfy the boundary condition on the x axis. When $\theta = \alpha$ we again have $V_\theta = 0$ and we satisfy the condition on the remaining boundary.

$$V_r = \frac{\partial\phi}{\partial r} = -\Lambda \frac{\pi}{\alpha} r^{\frac{\pi}{\alpha} - 1} \cos \frac{\pi\theta}{\alpha}$$

when

$$\begin{cases} \theta = 0 , & V_r = -\Lambda \dfrac{\pi}{\alpha} r^{\frac{\pi}{\alpha} - 1} \\ \theta = \alpha , & V_r = \Lambda \dfrac{\pi}{\alpha} r^{\frac{\pi}{\alpha} - 1} \end{cases}$$

11.31 a) Let $\alpha = \pi$ . We get for $\phi$ and $\psi$ :

http://ingesolucionarios.blogspot.com

(a) Show that the flow given in Prob. 11.30 reduces to the uniform flow of Sec. 11.16 when $\alpha = \pi$.
(b) When $\alpha = \pi/2$, draw an approximate flow net, making use of the fact that the potential lines and streamlines are orthogonal. Show that this can represent a flow in a corner. If $\Lambda = 1$, what is the velocity of flow along the horizontal wall at 10 ft from the corner?

$$\phi = -\Lambda r \cos\theta = -\Lambda x$$

$$\psi = -\Lambda r \sin\theta = -\Lambda y$$

This represents uniform flow since:

$$V_x = \frac{\partial\phi}{\partial x} = -\Lambda$$

$$V_y = 0$$

b) Let $\alpha = \dfrac{\pi}{2}$ .

$$\phi = -\Lambda r^2 \cos 2\theta$$

$$\psi = -\Lambda r^2 \sin 2\theta$$

Examine streamlines $\psi = const.$

$$\Lambda r^2 \sin 2\theta = const.$$

Replace $\sin 2\theta$ by $2\sin\theta\cos\theta$ . Thus:

$$2\Lambda r^2 \sin\theta\cos\theta = const.$$

$$2\Lambda xy = const.$$

$$xy = \frac{const.}{2\Lambda}$$

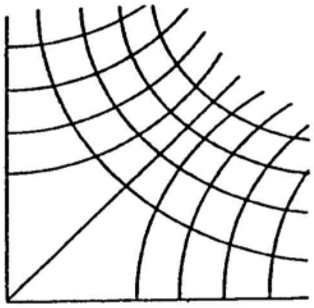

We thus have a system of rectangular hyperbolae.

$$V_r = \frac{\partial\psi}{r\partial\theta} = -\frac{1}{r}(2\Lambda r^2 \cos 2\theta) = -2\Lambda r\cos 2\theta$$

$$V_\theta = -\frac{\partial\psi}{\partial r} = 2\Lambda r \sin 2\theta$$

At (10,0) we have for $\Lambda = 1$ : $\begin{cases} V_r = -20 \\ V_\theta = 0 \end{cases}$ $\therefore$ $\vec{V} = -20\hat{i}$



http://ingesolucionarios.blogspot.com Edu_Zegarr_ch

 http://ingesolucionarios.blogspot.com

A source and sink of equal strength of 20 ft³/s is shown. What is the velocity at position (15, 15)?

$$\phi = \frac{-\Lambda}{4\pi}\left[\ln(r^2+a^2-2ra\cos\theta) + \ln(r^2+a^2+2ra\cos\theta)\right] - V_0 r\cos\theta$$

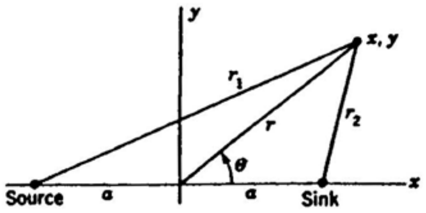


$$V_r = \frac{\partial\phi}{\partial r}$$

$$\therefore\quad V_r = -\frac{\Lambda}{4\pi}\left[\frac{2r-2a\cos\theta}{r^2+a^2-2ra\cos\theta} - \frac{2r+2a\cos\theta}{r^2+a^2+2ra\cos\theta}\right] + V_0\cos\theta$$

**Note:**

$$r = \frac{15}{.707}$$

$$\theta = 45°$$

$$a = 10$$

$$\Lambda = 20$$

$$V_r = -\frac{40}{4\pi}\left[\frac{\frac{15}{.707} - 7.07}{\frac{225}{.5}+100-(2)\left(\frac{15}{.707}\right)(10)(.707)} - \frac{\frac{15}{.707}+.707}{450+100+300}\right] + (10)(.707)$$

$$V_r = -\frac{40}{4\pi}\left(\frac{14.14}{250} - \frac{28.28}{850}\right) + 7.07 = -\frac{40}{4\pi}(.0565-.0333) + 7.07 = 6.997 \ ft/\text{sec}$$

$$V_\theta = -\frac{1}{r}\frac{\partial\phi}{\partial\theta}$$

$$V_\theta = -\frac{20}{4r\pi}\left(\frac{2ra\sin\theta}{r^2+a^2-2ra\cos\theta} - \frac{-2ra\sin\theta}{r^2+a^2+2ra\cos\theta}\right) - V_0\sin\theta$$

$$V_\theta = -\frac{40}{4\pi}\left(\frac{7.07}{250} + \frac{7.07}{850}\right) - 7.07 = -\frac{40}{4\pi}(.0283+.00832) - 7.07 = -7.19 \ ft/\text{sec}$$

$$V = (7.19^2+6.997^2)^{\frac{1}{2}} = 10.03 \ ft/\text{sec}$$

http://ingesolucionarios.blogspot.com

11.33

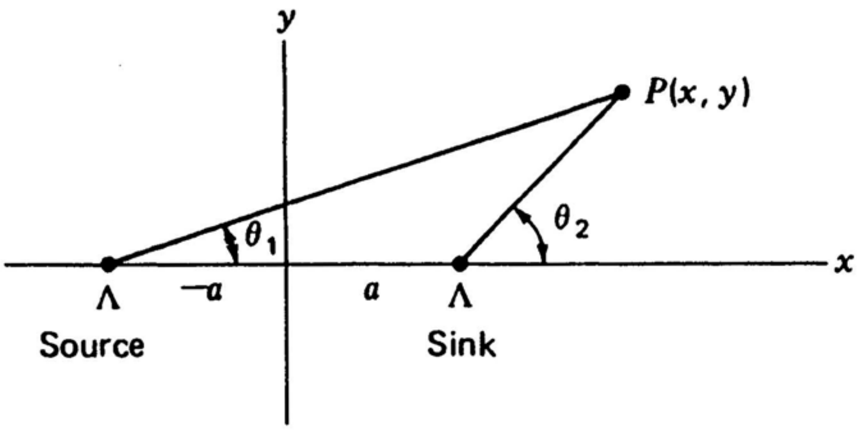


Consider a source and a sink of equal strength $\Lambda$ positioned at $x = \pm a$ along the $x$ axis as shown in . Show that the combined stream function is given as follows:

$$\psi = \frac{\Lambda}{2\pi}\left(\tan^{-1}\frac{y}{x+a} - \tan^{-1}\frac{y}{x-a}\right) \quad (a)$$

Using the identity,

$$\tan^{-1}A - \tan^{-1}B = \tan^{-1}\frac{A-B}{1+AB} \quad (b)$$

show that the streamlines are give by the equation

$$x^2 + y^2 - a^2 = \left[\frac{2ay}{\tan\left(\frac{2\pi\psi}{\Lambda}\right)}\right] \quad (c)$$

Show that the streamlines are circles with centers on the $y$ axis by putting Eq. $(c)$ in the form $x^2 + (y - C_1)^2 = C_2^2$, where $C_1$ and $C_2$ are constants for a streamline. Show that the radii of the circles are given as

$$R = a\csc\frac{2\pi\psi}{\Lambda}$$

Also, show that the circles all pass through the source and sink points.

$$\psi = \frac{\lambda\theta_1}{2\pi} - \frac{\lambda\theta_2}{2\pi}$$

$$\psi = \frac{\lambda}{2\pi}\left[\tan^{-1}\frac{y}{x+a} - \tan^{-1}\frac{y}{x-a}\right]$$

**Hence**

$$\frac{2\pi\psi}{\lambda} = \left[\tan^{-1}\frac{y}{x+a} - \tan^{-1}\frac{y}{x-a}\right]$$

$$\frac{2\pi\psi}{\lambda} = \tan^{-1}\left[\frac{\frac{y}{x+a} - \frac{y}{x-a}}{1 + \frac{y^2}{x^2-a^2}}\right]$$

$$= \tan^{-1}\left[\frac{\frac{y(x-a-x-a)}{x^2-a^2}}{\frac{x^2-a^2+y^2}{x^2-a^2}}\right]$$

$$\frac{2\pi\psi}{\lambda} = \tan^{-1}\left(\frac{-2ay}{x^2-a^2+y^2}\right)$$

$$\tan\frac{2\pi\psi}{\lambda} = \frac{-2ay}{x^2-a^2+y^2}$$

http://ingesolucionarios.blogspot.com

**(cont.)**

Let $\tan \frac{2\pi\psi}{\lambda} = C$

$$x^2+y^2-a^2 = -\frac{2ay}{C}$$

$$x^2 + \left(y + \frac{a}{C}\right)^2 = a^2 + \frac{a^2}{C^2} \qquad (1)$$

Hence we have circles with centers along the $y$ axis with radii given as

$$R = \left[a^2\left(1 + \frac{1}{C^2}\right)\right]^{\frac{1}{2}} = a\left(1 + ctn^2\,\frac{2\pi\psi}{\lambda}\right)^{\frac{1}{2}} = a\left(csc^2\,\frac{2\pi\psi}{\lambda}\right)^{\frac{1}{2}}$$

$$\therefore \quad R = a\,csc\,\frac{2\pi\psi}{\lambda}$$

Also, when $y=0$, we get from (1)

$$x^2 + \frac{a^2}{C^2} = a^2 + \frac{a^2}{C^2} \qquad x = \pm a$$

Thus circles go through the source point and the sink point.

http://ingesolucionarios.blogspot.com

In Prob. 11.30 what is the velocity at the corner for $0 < \alpha < \pi$ and for $\pi < \alpha < 2\pi$?

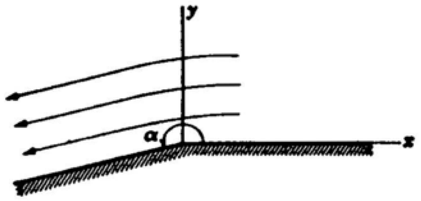


$$V_r = \frac{\partial \psi}{r \partial \theta}$$

$$V_\theta = -\frac{\partial \psi}{\partial r}$$

$$\therefore \quad V_r = \frac{1}{r}\frac{\partial}{\partial \theta}\left[-\Lambda r^{\frac{\pi}{\alpha}} \sin\left(\frac{\pi\theta}{\alpha}\right)\right] = \frac{1}{r}\left[-\Lambda r^{\frac{\pi}{\alpha}} \cos\left(\frac{\pi\theta}{\alpha}\right)\left(\frac{\pi}{\alpha}\right)\right] = -\left(\Lambda \frac{\pi}{\alpha}\right) r^{\frac{\pi}{\alpha}-1} \cos\left(\frac{\pi\theta}{\alpha}\right)$$

$$V_\theta = -\frac{\partial}{\partial r}\left[-\Lambda r^{\frac{\pi}{\alpha}} \sin \frac{\pi\theta}{\alpha}\right] = \Lambda (r^{\frac{\pi}{\alpha}-1})\left(\frac{\pi}{\alpha}\right) \sin \frac{\pi\theta}{\alpha} = \frac{\Lambda\pi}{\alpha} r^{\frac{\pi}{\alpha}-1} \sin \frac{\pi\theta}{\alpha}$$

$\therefore$ For $0 < \alpha < \pi$ at $r = 0$

$$\begin{cases} V_r = \Lambda \dfrac{\pi}{\alpha} r^{\frac{\pi-\alpha}{\alpha}} \cos \dfrac{\pi\theta}{\alpha} \\ V_\theta = \dfrac{\Lambda\pi}{\alpha} r^{\frac{\pi-\alpha}{\alpha}} \sin \dfrac{\pi\theta}{\alpha} \end{cases}$$

$\frac{\pi - \alpha}{\alpha}$ is positive.

$$\therefore \quad V_r = V_\theta = 0$$

For $\pi < \alpha < 2\pi$ at $r = 0$

$\frac{\pi - \alpha}{\alpha}$ is negative.

$$\therefore \quad V_r = V_\theta = \infty$$

Examine the flow of a pair of two-dimensional opposite vortices placed at $(a, 0)$ and $(-a, 0)$, respectively, of strength $\Lambda$. Take the counterclockwise vortex at $x = -a$ and the clockwise vortex at $x = a$. Show that the streamlines $\psi = C$ are given as

$$y^2 + \left[x + a\left(\frac{1 + e^{4\pi C/\Lambda}}{1 - e^{4\pi C/\Lambda}}\right)^2\right] = \left[\frac{2a}{e^{-2\pi C/\Lambda} - e^{2\pi C/\Lambda}}\right]^2$$

Hence they are circles of radii $2a/(e^{-2\pi C/\Lambda} - e^{2\pi C/\Lambda})$.

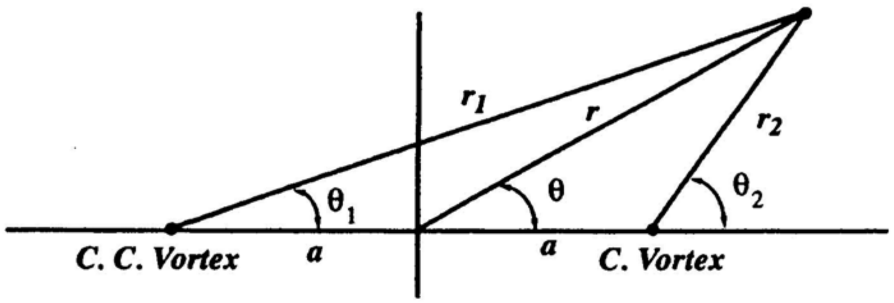


$$\psi = -\frac{\Lambda}{2\pi}\ln r_1 + \frac{\Lambda}{2\pi}\ln r_2 = \frac{\Lambda}{2\pi}\ln\frac{r_2}{r_1}$$

$$\begin{cases} r_1 = [(x+a)^2 + y^2]^{\frac{1}{2}} \\ r_2 = [(x-a)^2 + y^2]^{\frac{1}{2}} \end{cases}$$

$$\therefore \quad \psi = \frac{\Lambda}{2\pi}\ln\left[\frac{(x+a)^2 + y^2}{(x-a)^2 + y^2}\right]^{\frac{1}{2}}$$

Take antilog.

$$\frac{(x+a)^2 + y^2}{(x-a)^2 + y^2} = e^{\psi\frac{4\pi}{\Lambda}}$$

$$\therefore \quad (x+a)^2 + y^2 = [(x-a)^2 + y^2]e^{\psi\frac{4\pi}{\Lambda}}$$

Let $\psi = const. = C$ for potential line. Let $e^{\frac{C4\pi}{\Lambda}} = D$

$$\therefore \quad x^2 + 2xa + a^2 + y^2 = (x^2 - 2xa + a^2 + y^2)D$$

http://ingesolucionarios.blogspot.com

**(cont.)**

$$x^2(1-D) + 2xa(1+D) + a^2(1-D) + y^2(1-D) = 0$$

Divide by $1-D$

$$x^2 + y^2 + a^2 + 2xa\,\frac{(1+D)}{(1-D)} = 0$$

$$y^2 + \left[x + a\left(\frac{1+D}{1-D}\right)\right]^2 - a^2\left(\frac{1+D}{1-D}\right)^2 + a^2 = 0$$

$$y^2 + \left[x + a\left(\frac{1+D}{1-D}\right)\right]^2 + a^2\left[1 - \left(\frac{1+D}{1-D}\right)^2\right] = 0$$

$$y^2 + \left[x + a\left(\frac{1+D}{1-D}\right)\right]^2 + a^2\left[\frac{(1-D)^2 - (1+D)^2}{(1-D)^2}\right] = 0$$

$$y^2 + \left[x + a\left(\frac{1+D}{1-D}\right)\right]^2 + a^2\,\frac{1 - 2D + D^2 - 1 - 2D - D^2}{(1-D)^2} = 0$$

$$y^2 + \left[x + a\left(\frac{1+D}{1-D}\right)\right]^2 - \frac{a^2(4D)}{(1-D)^2} = 0$$

$$y^2 + \left[x + a\left(\frac{1+D}{1-D}\right)^2\right] - \frac{(2a)^2}{D\left(\frac{1}{D} - 1\right)^2} = 0$$

$$y^2 + \left[x + a\left(\frac{1+D}{1-D}\right)^2\right] = \left[\frac{(2a)^2}{e^{\frac{-2\pi C}{\Lambda}} + e^{\frac{2\pi C}{\Lambda}}}\right]^2$$

Hence

$$y^2 + \left[x + a\left(\frac{1+e^{\frac{4\pi C}{\Lambda}}}{1-e^{\frac{4\pi C}{\Lambda}}}\right)^2\right] = \left[\frac{2a}{e^{\frac{-2\pi C}{\Lambda}} - e^{\frac{2\pi C}{\Lambda}}}\right]^2$$



http://ingesolucionarios.blogspot.com Edu_Zegarr_ch

http://ingesolucionarios.blogspot.com

11.36

What is the circulation about the singular point in the flow given in Prob. 11.16?

$$\Gamma = \oint \vec{V} \cdot d\vec{l}$$

Using a unit circle we have

$$\Gamma = \int_0^{2\pi} V_\theta \, d\theta$$

$$V_\theta = \frac{\partial \phi}{r \partial \theta} = \frac{1}{r} \frac{\partial}{\partial \theta}\left(-\frac{\Lambda}{r^2}\cos 2\theta\right) = -\frac{1}{r}\frac{\Lambda}{r^2}(-\sin 2\theta)(2) = \frac{2\Lambda}{r^3}\sin 2\theta$$

$$\therefore \quad \Gamma = \int_0^{2\pi} 2\Lambda \sin 2\theta \, d\theta = 2\Lambda\left(\frac{-\cos 2\theta}{2}\right)\Big|_0^{2\pi} = \lambda(-1+1) = 0$$

http://ingesolucionarios.blogspot.com
Edu_Zegarr_ch

11.37

We wish to represent the potential flow about a cylinder of radius 2 ft without circulation, where the free-stream velocity at infinity is 10 ft/s. What should the stream function be? What is the drop in pressure at the top of the cylinder from the free-stream pressure at infinity? What is the increase in pressure above the free-stream pressure at the stagnation point? Take the fluid as air having $\rho = 0.002378$ slug/ft$^3$.

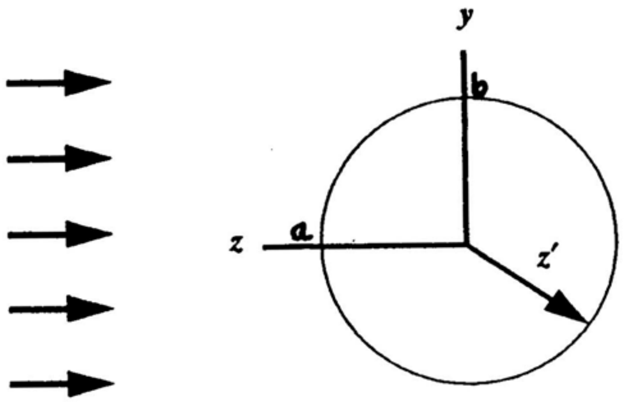


a) $$\phi = V_0 y - \frac{\chi \sin\theta}{r}$$

Clearly $V_0 = 10$ . To get the proper value of $\chi$ for this case, note from Eq. 12.87 that:

$$r^2 = \frac{\chi}{V_0}$$

$$\therefore \quad \chi = r^2 V_0 = (4)(10) = 40$$

$$\psi = 10y - \frac{40\sin\theta}{r} = 10r\sin\theta - \frac{40\sin\theta}{r}$$

Hence:

$$\phi = 10x + \frac{40\cos\theta}{r} = 10r\cos\theta + \frac{40\cos\theta}{r}$$

b) The speed at the top of the cylinder (point b) is:

$$(V_\theta) = -\frac{\partial\psi}{\partial r} = -10\sin\theta - \frac{40\sin\theta}{r^2}$$

http://ingesolucionarios.blogspot.com

**(cont.)**

At $r = 2$ and $\theta = \pi/2$ :

$$(V_\theta)_b = -10 - \frac{40}{4} = -20 \quad ft/\text{sec}$$

Now use **Bernoulli**:

$$\frac{p_\infty}{\rho} + \frac{V_\infty^2}{2} = \frac{p_b}{\rho} + \frac{V_b^2}{2}$$

$$\therefore \quad (p_b - p_\infty) = \frac{\rho}{2}(V_\infty^2 - V_b^2) = \frac{.002378}{2}(100-400)$$

$$\Delta p = -.357 \quad psf$$

We have a drop in pressure of .357 *psf*

c) At the stagnation point, $V = 0$ .

$$\therefore \quad (p_0 - p_\infty) = \frac{\rho}{2}(V_\infty^2) = .1189 \ psf$$

There is a pressure rise of .1189 *psf* at the stagnation point.



http://ingesolucionarios.blogspot.com

Edu_Zegarr_ch

http://ingesolucionarios.blogspot.com
11.38

Show that the lift of a cylinder without circulation is zero.

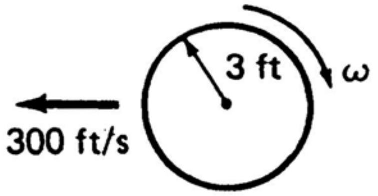


Using **Bernoulli** we get for $p_b$ :

$$p_b = \gamma\left[\frac{V_0^2}{2g} + \frac{p_0}{\gamma} - \frac{(2V_0 \sin\theta)^2}{2g}\right]$$

$$L = -\int_0^{2\pi} p_b \sin\theta \left(\frac{\chi}{V_0}\right)^{\frac{1}{2}} d\theta$$

$$L = -\int_0^{2\pi} \gamma\left(\frac{\chi}{V_0}\right)^{\frac{1}{2}}\left[\frac{V_0^2}{2g} + \frac{p_0}{\gamma} - \frac{(2V_0 \sin\theta)^2}{2g}\right]\sin\theta\, d\theta$$

This becomes:

$$L = -\gamma\left(\frac{\chi}{V_0}\right)^{\frac{1}{2}}\left(\frac{V_0^2}{2g} + \frac{p_0}{\gamma}\right)\int_0^{2\pi} \sin\theta\, d\theta + \gamma\left(\frac{\chi}{V_0}\right)^{\frac{1}{2}}\left(\frac{2V_0^2}{g}\right)\int_0^{2\pi} \sin^3\theta\, d\theta$$

Since $\int_0^{2\pi} \sin\theta\, d\theta = 0$ and

$$\int_0^{2\pi} \sin^3\theta\, d\theta = -\frac{1}{3}\cos\theta\,(\sin^2\theta + 2)\Big|_0^{2\pi} = -\frac{1}{3}(2) + \frac{1}{3}(2) = 0$$

We conclude $L = 0$ .

 http://ingesolucionarios.blogspot.com

A whirlpool has a velocity of 2 m/s at a distance $r = 1$ m from the center of the core. What is the decrease in elevation of the free surface from $r = 3$ m to $r = 1$ m?

For a whirlpool

$$V = \frac{\Lambda}{2\pi r}$$

At $r=1$ , $V=2$

$$\therefore \quad 2 = \frac{\Lambda}{2\pi(1)}$$

$$\Lambda = 4\pi$$

**Bernoulli** at free surface:

$$\frac{V_1^2}{2g} + z_1 + \frac{p_{atm}}{\gamma} = \frac{V_2^2}{2g} + z_2 + \frac{p_{atm}}{\gamma}$$

$$z_2 - z_1 = \frac{V_1^2}{2g} - \frac{V_2^2}{2g}$$

Hence for prob. at hand.

$$V_1 = \frac{4\pi}{(2\pi)(3)} = \frac{4}{6} = \frac{2}{3} \ m/s$$

$$V_2 = \frac{4\pi}{2\pi(1)} = 2 \quad m/s$$

$$\therefore \quad z_2 - z_1 = \frac{\left(\frac{2}{3}\right)^2}{2g} - \frac{2^2}{2g} = \frac{1}{2g}(.667^2 - 4)$$

$$\Delta z = -.1812 \ m \qquad Decrease = .1812 \ m$$

http://ingesolucionarios.blogspot.com

11.41

Show that the superposition of equal sources at a distance $2a$ apart gives the flow of a single source with an infinite wall normal to the line of connection of the sources and at a position halfway between the sources. (This method of creating boundaries mathematically is called the *method of images*.)

The superposition of the two flows gives a zero velocity in the x direction, along surface A-A .

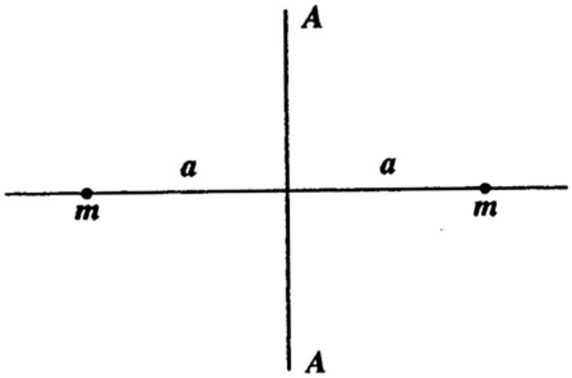


A single source with a solid boundary as shown above has the same condition along A-A and looking at the right side has the same singularity.

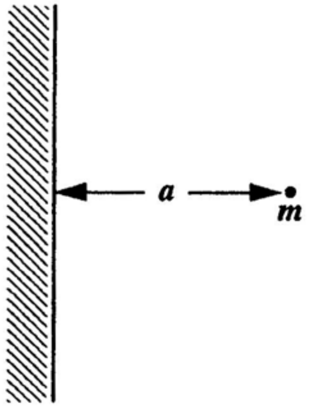

http://ingesolucionarios.blogspot.com

11.42

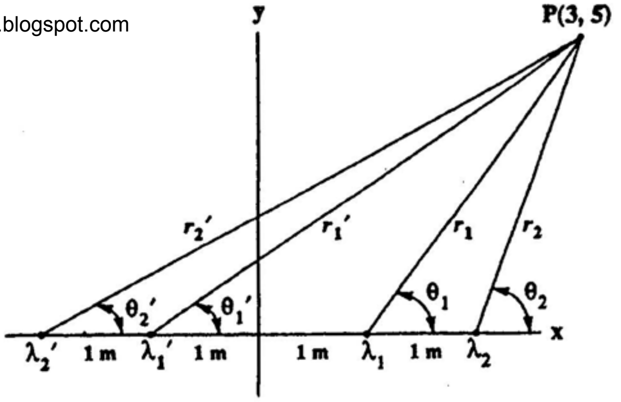


Using the method of images as presented in Prob. 11.41, what is the speed of flow at position (3, 5) m from two sources near an infinite wall as shown. The strengths of the sources are $\Lambda_1 = 10\ m^2/s$ and $\Lambda_2 = 5\ m^2/s$.

We use the method of images to create the wall as shown.

$$\begin{cases} \theta_1 = \tan^{-1}\left(\frac{5}{2}\right) = 68.2° \\ \theta_2 = \tan^{-1}\left(\frac{5}{1}\right) = 78.7° \\ \theta_1' = \tan^{-1}\left(\frac{5}{4}\right) = 51.3° \\ \theta' = \tan^{-1}\left(\frac{5}{5}\right) = 45° \end{cases}$$

$$V_{r_1} = \frac{10}{2\pi r_1} = \frac{10}{2\pi(5^2+2^2)^{\frac{1}{2}}} = .2955\ m/s$$

$$V_{r_2} = \frac{5}{2\pi r_2} = \frac{5}{2\pi(5^2+1^2)^{\frac{1}{2}}} = .1561\ m/s$$

$$V_{r_2'} = \frac{10}{2\pi r_1'} = \frac{10}{2\pi(5^2+4^2)^{\frac{1}{2}}} = .2486\ m/s$$

$$V_{r_2'} = \frac{5}{2\pi r_2'} = \frac{5}{2\pi(5^2+5^2)^{\frac{1}{2}}} = .1125\ m/s$$

$$\vec{V} = .2955(\cos 68.2°\ \hat{i} + \sin 68.2°\ \hat{j}) + .1561(\cos 78.7°\ \hat{i} + \sin 78.7°\ \hat{j})$$

$$+ .2486(\cos 51.3°\ \hat{i} + \sin 51.3°\ \hat{j}) + .1125(\cos 45°\ \hat{i} + \sin 45°\ \hat{j})$$

$$\vec{V} = .3753\ \hat{i} + .701\ \hat{j}\ m/\text{sec}$$

 http://ingesolucionarios.blogspot.com

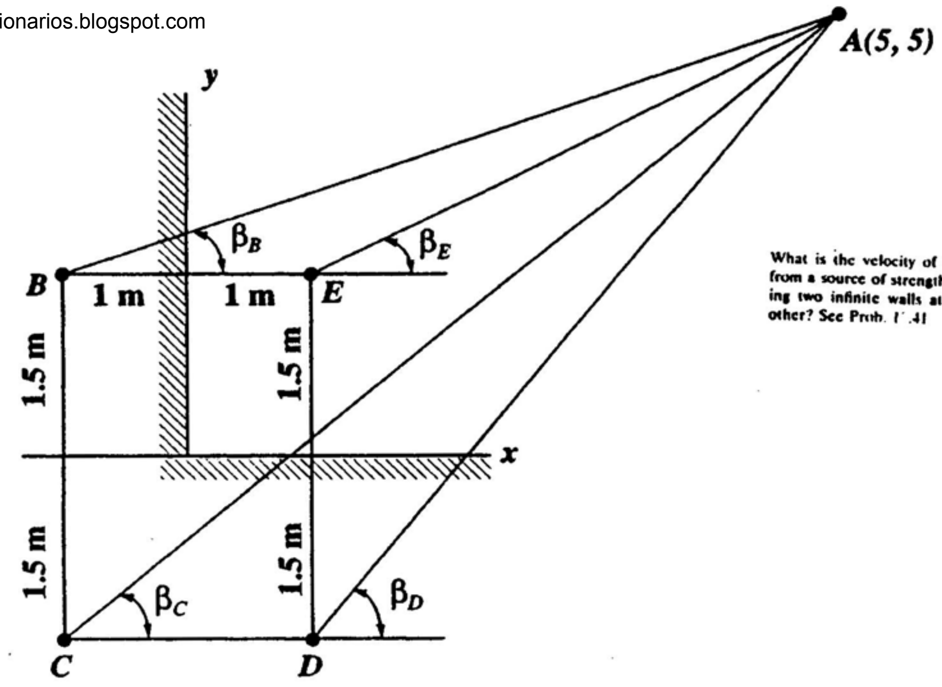


What is the velocity of flow at position (5, 5) from a source of strength Λ = 10 m²/s involving two infinite walls at right angles to each other? See Prob. 11.41

$$AB = [(5+1)^2 + (5-1.5)^2]^{1/2} = 6.946$$

$$\beta_B = \tan^{-1}\left(\frac{5-1.5}{5+1}\right) = 30.26°$$

$$EA = [(5-1)^2 + (5-1.5)^2]^{1/2} = 5.315$$

$$\beta_E = \tan^{-1}\left(\frac{3.5}{5-1}\right) = 41.186°$$

$$AD = [(5+1.5)^2 + (5-1)^2]^{1/2} = 7.632$$

$$\beta_D = \tan^{-1}\left(\frac{6.5}{5-1}\right) = 58.39°$$

$$AC = [(5+1)^2 + (5+1.5)^2]^{1/2} = 8.846$$

$$\beta_C = \tan^{-1}\left(\frac{5+1.5}{1+5}\right) = 47.29°$$

$$\vec{V} = V_x\hat{\imath} + V_y\hat{\jmath} =$$

$$\frac{10}{2\pi}\left[\left(\frac{1}{6.946}\cos 30.26° + \frac{1}{5.315}\cos 41.186° + \frac{1}{7.632}\cos 58.39° + \frac{1}{8.846}\cos 47.29°\right)\hat{\imath} + \left(\frac{1}{6.946}\sin 30.26° + \frac{1}{5.315}\sin 41.186° + \frac{1}{7.632}\sin 58.39° + \frac{1}{8.846}\sin 47.29°\right)\hat{\jmath}\right]$$

$$\boxed{\vec{V} = 0.6546\hat{\imath} + 0.6225\hat{\jmath} \text{ m/s}}$$

http://ingesolucionarios.blogspot.com 

11.44 http://ingesolucionarios.blogspot.com

In the previous problems, we have used point sources or sinks in conjunction with the method of images. Explain why this would not work if we were to consider the flow about something like a cylinder near a wall as shown.

The flow from the "image" would combine with the flow from the actual case to render the stream lines there no longer to represent a flow about a cylinder. For point sources the superpositions do not affect the singularities.

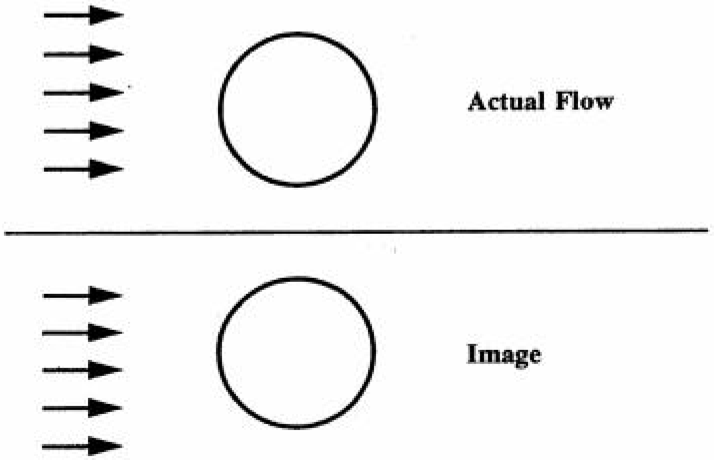

http://ingesolucionarios.blogspot.com

Consider the superposition of a uniform flow in the positive $x$ direction with velocity of 2 m/s and a source at the origin with a strength $\Lambda = 3\ m^2/s$. Where is the stagnation point? What is the shape of the boundary about which this might represent a flow pattern? Sketch the boundary.

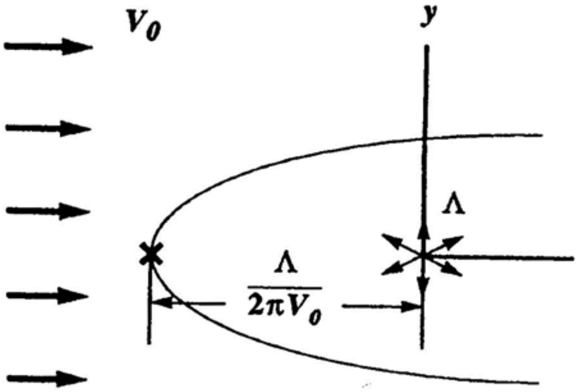


$$\phi = V_0 x + \frac{\Lambda}{2\pi} \ln r$$

$$\therefore \quad \phi = 2x + \frac{3}{2\pi} \ln r = 2r\cos\theta + \frac{3}{2\pi} \ln r$$

a) Find stagnation point.

$$\begin{cases} V_r = \dfrac{\partial\phi}{\partial r} = 2\cos\theta + \dfrac{3}{2\pi}\dfrac{1}{r} = 0 \\[2ex] V_\theta = \dfrac{\partial\phi}{r\partial\theta} = -\dfrac{2r}{r}\sin\theta = -2\sin\theta = 0 \end{cases}$$

$$\therefore \quad \theta = 0\,,\ \pi$$

$$2\cos\theta + \frac{3}{2\pi}\frac{1}{r} = 0$$

Let $\theta = \pi$ to make $r$ positive.

$$(2)(-1) = \frac{-3}{2\pi}\frac{1}{r_{STAG}}$$

$$\therefore \quad r_{STAG} = .2387\ m$$

$$\psi = V_0 y + \frac{\Lambda}{2\pi}\theta$$

$$\psi = V_0 r\sin\theta + \frac{\Lambda}{2\pi}\theta$$

Set $r = .2387$ $\theta = \pi$ .


http://ingesolucionarios.blogspot.com Edu_Zegarr_ch

http://ingesolucionarios.blogspot.com
(cont.)

$$\psi = (2)(.2387)\sin\pi + \frac{3}{2\pi}(\pi) = \frac{3}{2}$$

$$\therefore \quad \psi = \frac{3}{2}$$

Hence the boundary is given by the following equation.

$$V_0 r \sin\theta + \frac{\Lambda}{2\pi}\theta = \frac{\Lambda}{2}$$

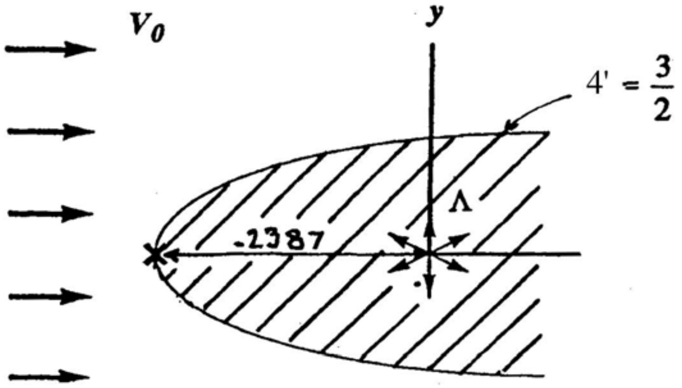


For problem at hand:

$$2r\sin\theta + \frac{3}{2\pi}\theta = \frac{3}{2}$$

http://ingesolucionarios.blogspot.com

In the preceding problem, if the free stream pressure is 101,325 Pa, what is the gage pressure on the boundary at $r = 4$ m? The boundary of the body is found from the preceding problem to be

$$V_0 r \sin\theta + \frac{\Lambda}{2\pi}\theta = \frac{\Lambda}{2}$$

The fluid is water at 30°C.

At $r = 4$ we have for $\theta$ :

$$8\sin\theta + \frac{3}{2\pi}\theta = \frac{3}{2}$$

Solve for $\theta$ by trial and error.

$$\theta = 10.19° = .1778\ rad$$

$$V_r = 2\cos\theta + \frac{3}{2\pi}\frac{1}{r} = 2\cos(10.19) + \left(\frac{3}{2\pi}\right)\left(\frac{1}{4}\right) = 2.088\ m/s$$

$$V_\theta = -2\sin(10.19) = -.3538\ m/s$$

**Bernoulli**

$$Set \begin{cases} r = \infty \\ \theta = \pi \end{cases}$$

$$\therefore\ V_r = -2\ m/s \qquad \text{This is } V_0 .$$

Hence

$$\frac{2^2}{2g} + \frac{101{,}325}{995.7g} = \frac{(2.088^2 + .3538^2)}{2g} + \frac{p}{995.7g}$$

$$p_{gauge} = (2)(995.7) - \frac{(2.088^2 + .3538^2)}{2}(995.7)$$

$$p_{gauge} = -241.42\ \ Pa\ gauge$$

http://ingesolucionarios.blogspot.com

11.47

In Probs. 11.45 and 11.46 we considered the flow about a half body formed by a source and a uniform flow. If the strength of the source is $3\ m^3/(s\times m)$ and the uniform velocity is 5 m/s, where is the stagnation point and what is the maximum total width of the half body?

$$\Lambda = 3\ m^3/s/m \qquad V_0 = 5\ m/s$$

$$\phi = V_0 x + \frac{\Lambda}{2\pi}\ln r = 5r\cos\theta + \frac{3}{2\pi}\ln r$$

$$\begin{cases} V_r = \dfrac{\partial\phi}{\partial r} = 5\cos\theta + \dfrac{3}{2\pi}\left(\dfrac{1}{r}\right) \\ V_\theta = \dfrac{\partial\phi}{r\partial\theta} = -5\sin\theta \end{cases}$$

At stag. point $\quad V_r = V_\theta = 0$

$$\therefore \quad \theta = 0\,,\ \pi \qquad (use\ \ \pi)$$

$$5(-1) + \frac{3}{2\pi}\frac{1}{r_{STAG}} = 0$$

$$\boxed{r_{STAG} = .09549\ m}$$

$$\psi = 5y + \frac{3}{2\pi}\theta = 5r\sin\theta + \frac{3}{2\pi}\theta$$

Set $\quad r = .09549 \quad$ and $\quad \theta = \pi$

$$\psi = (5)(.09549)\sin(\pi) + \frac{3}{2\pi}\pi = \frac{3}{2}$$



http://ingesolucionarios.blogspot.com

Edu_Zegarr_ch

http://ingesolucionarios.blogspot.com

**(cont.)**

Set $\psi = \frac{3}{2}$

$$\therefore \ \frac{3}{2} = 5r\sin\theta + \frac{3}{2\pi}\theta$$

$$\therefore \ 5y + \frac{3}{2\pi}\theta = \frac{3}{2}$$

To get max $y$, set $\theta = 0$

$$\therefore \ 5y_{max} = \frac{3}{2}$$

$$\boxed{y_{max} = .3 \quad m}$$

$$\boxed{(Width)_{max} = .6 \quad m}$$



http://ingesolucionarios.blogspot.com
Edu_Zegarr_ch

11.48 http://ingesolucionarios.blogspot.com

A source at the origin and normal to the *xy* plane of strength 10 m³/(s)(m) and a uniform flow are superposed to form a half body. What should the uniform velocity be to have a maximum width of 0.8 m? Use results of Probs. 11.45 and 11.46.

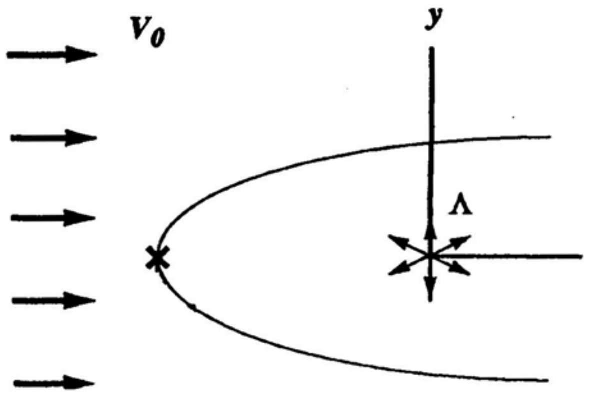


$$V_0 y + \frac{\Lambda}{2\pi} = \frac{\Lambda}{2}$$

Let $\Lambda = 10$ . Set $\theta = 0$ , $y = .4$ . Solve for $V_0$ .

$$V_0(.4) = \frac{10}{2}$$

$$\boxed{V_0 = 12.5 \ m/s}$$



http://ingesolucionarios.blogspot.com Edu_Zegarr_ch

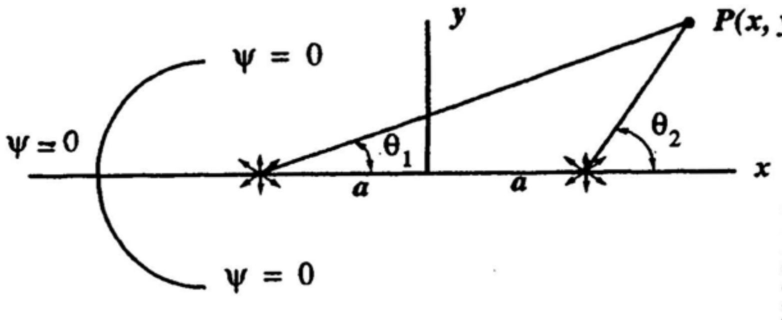


Consider a uniform flow in the $x$ direction at speed $V_0$ superposed on a source of strength $\Lambda$ and at $x = -a$ and a sink of strength $\Lambda$ at $x = +a$. The streamline along the $x$ axis will split and form an oval-shaped region which is called a *Rankine oval*. First, show that the streamlines that open at points $A$ and $B$ must be $\psi = 0$. Then, show that the width of the oval $h$ satisfies the equation

$$\frac{h}{a} = 2\tan\left(\frac{\pi}{2} - \frac{\pi V_0 h}{2\Lambda}\right)$$

The stream function for the combined flow is:

$$\psi = V_0 y + \frac{\Lambda}{2\pi}\theta_1 - \frac{\Lambda}{2\pi}\theta_2 \qquad (a)$$

At position $y = 0$ along the negative axis to the left of $x = -a$, we see that

$$\theta_1 = \theta_2 = \pi$$

Hence we see from ***Eq. (a)***. that $\psi = 0$

Now set $\psi = 0$ for ***Eq. (a)***. We have:

$$V_0 y + \frac{\Lambda}{2\pi}\theta_1 - \frac{\Lambda}{2\pi}\theta_2 = 0 \qquad (b)$$

Set $\theta_1 = \tan^{-1}\left[\frac{\frac{h}{2}}{a}\right]$ and $\theta_2 = \pi - \tan^{-1}\left[\frac{\frac{h}{2}}{a}\right]$

Let $y = \frac{h}{2}$ We get from ***Eq. (b)***

$$V_0\frac{h}{2} + \frac{\Lambda}{2\pi}\left[\tan^{-1}\frac{h}{2a} - \pi + \tan^{-1}\frac{h}{2a}\right] = 0$$

$$\frac{V_0\pi h}{\Lambda} + \left[2\tan^{-1}\frac{h}{2a} - \pi\right] = 0$$

$$\tan^{-1}\frac{h}{2a} = \frac{1}{2}\left[\pi - \frac{V_0\pi h}{\Lambda}\right]$$

$$\frac{h}{a} = 2\tan\left[\frac{\pi}{2} - \frac{V_0\pi h}{2\Lambda}\right]$$

http://ingesolucionarios.blogspot.com

**11.50**

In Prob. 11.49 determine the length $L$ as a function of $V_0$, $\Lambda$, and $a$ for the Rankine oval. *Hint:* Superpose Eq. (11.68) for $\phi$ of the source and sink combination with a uniform flow of velocity $V_0$ using cylindrical coordinates for the latter. Show that

$$\frac{L}{a} = 2\left(1 + \frac{\Lambda}{\pi V_0 a}\right)^{1/2}$$

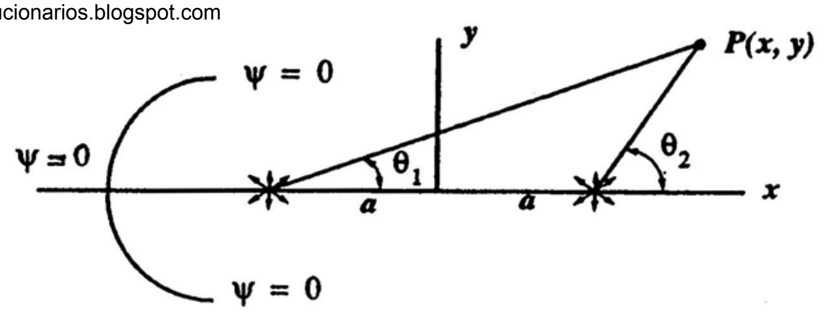


Point $A$ is a stagnation point. Use the velocity potential $\phi$.

$$\phi = V_0 r\cos\theta + \frac{\Lambda}{4\pi}\left[\ln(r^2 + a^2 + 2ra\cos\theta) - \ln(r^2 + a^2 - 2ra\cos\theta)\right]$$

$$\frac{\partial\phi}{\partial r} = 0$$

$$V_0\cos\theta + \frac{\Lambda}{4\pi}\left[\frac{2r + 2a\cos\theta}{r^2 + a^2 + 2ra\cos\theta} - \frac{2r - 2a\cos\theta}{r^2 + a^2 - 2ra\cos\theta}\right] = 0$$

Set $\theta = \pi \quad \therefore \cos\theta = -1$

$$-V_0 + \frac{\Lambda}{2\pi}\left[\frac{r-a}{r^2 - 2ra + a^2} - \frac{r+a}{r^2 + 2ra + a^2}\right] = 0$$

$$-V_0 + \frac{\Lambda}{2\pi}\left[\frac{r-a}{(r-a)^2} - \frac{r+a}{(r+a)^2}\right] = 0$$

$$-V_0 + \frac{\Lambda}{2\pi}\left[\frac{1}{r-a} - \frac{1}{r+a}\right] = 0$$

$$-V_0 + \frac{\Lambda}{2\pi}\left[\frac{(r+a) - (r-a)}{r^2 - a^2}\right] = 0$$

$$V_0 = \frac{\Lambda}{2\pi}\left[\frac{2a}{r^2 - a^2}\right]$$

$$\frac{r^2 - a^2}{a^2} = \frac{\Lambda}{\pi V_0 a}$$

Now $r = \dfrac{L}{2}$

$$\boxed{\frac{L}{a} = 2\left(1 + \frac{\Lambda}{\pi V_0 a}\right)^{1/2}}$$

A Rankine oval is formed by a uniform flow $V_0$ of 5 m/s and a source and sink with strengths Λ equal to 8 $m^3/(s)(m)$. If the source and sink are at distance $a = 0.2$ m, respectively, what is the maximum width of the oval and what is the maximum velocity of the flow? (See Probs. 11.49 and 11.50.)

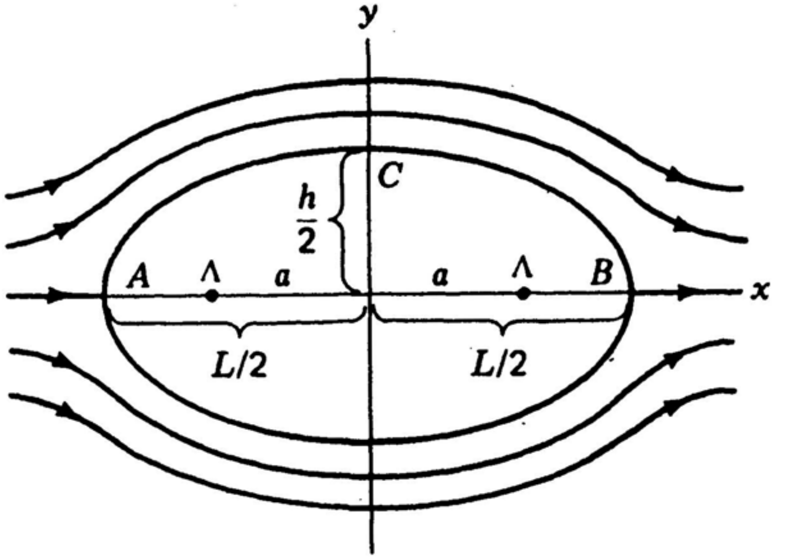


a)
$$\frac{h}{a} = 2\tan\left(\frac{\pi}{2} - \frac{\pi V_0 h}{2\Lambda}\right)$$

Insert numerical data.

$$\frac{h}{.2} = 2\tan\left[\frac{\pi}{2} - \frac{\pi}{2}\left(\frac{5h}{8}\right)\right]$$

$$\therefore \quad 2.5 = \frac{1}{h}\tan\left[\frac{\pi}{2}(1 - .625\,h)\right]$$

Solve for $h$ by trial and error.

$$h = .5993\ m$$

b) **Look at $V_\theta$ .**

$$\psi = 5r\sin\theta + \frac{8}{2\pi}\left[\tan^{-1}\frac{y}{x+.2} - \tan^{-1}\frac{y}{x-.2}\right]$$

$$\psi = 5r\sin\theta + 1.273\left[\tan^{-1}\left(\frac{r\sin\theta}{r\cos\theta + .2}\right) - \tan^{-1}\left(\frac{r\sin\theta}{r\cos - .2}\right)\right]$$

$$(V_\theta)_{max} \rightarrow \text{occurs at} \quad x = 0 \ , \ y = \frac{.5993}{2}$$

http://ingesolucionarios.blogspot.com
**(cont.)**

$$\therefore \quad \theta = \frac{\pi}{2} \qquad r = .3$$

$$V_\theta = -\frac{\partial \psi}{\partial r} = -5\sin\theta - 1.273\left[\frac{1}{1+\left(\frac{r\sin\theta}{r\cos\theta+.2}\right)^2}\left(\frac{\sin\theta}{r\cos\theta+.2} - \frac{r\sin\theta}{(r\cos\theta+.2)^2}\cos\theta\right)\right.$$

$$\left. - \frac{1}{1+\left(\frac{r\sin\theta}{r\cos\theta-.2}\right)^2}\left(\frac{\sin\theta}{r\cos\theta-.2} - \frac{r\sin\theta}{(r\cos\theta-.2)^2}\cos\theta\right)\right]$$

Set $\theta = \frac{\pi}{2}, \quad r = \frac{.5993}{2} = .3 \; m$

$$(V_\theta)_{max} = -5 - 1.273\left[\left(\frac{1}{1+\left(\frac{.3}{.2}\right)^2}\right)\left(\frac{1}{.2} - 0\right) - \frac{1}{1+\left(\frac{.3}{-.2}\right)^2}\left(\frac{1}{(-.2)} + 0\right)\right]$$

$$(V_\theta)_{max} = -5 - 1.273[1.5385 + 1.5835] \qquad (V_\theta)_{max} = 8.92 \; m/s$$

At boundary at top or bottom, $V_r = 0$ and $|V_\theta| = 8.92 \; m/s$

$$\therefore \quad |V_{max}| = 8.92 \; m/s$$

http://ingesolucionarios.blogspot.com

We wish to have a Rankine oval of length $L = 4$ m (see Fig. P12.49). If the free stream velocity is 8 m/s and the strengths of source and sink are 6 m²/s, what will be width of the oval $h$? (See Probs. 12.49 and 12.50.)

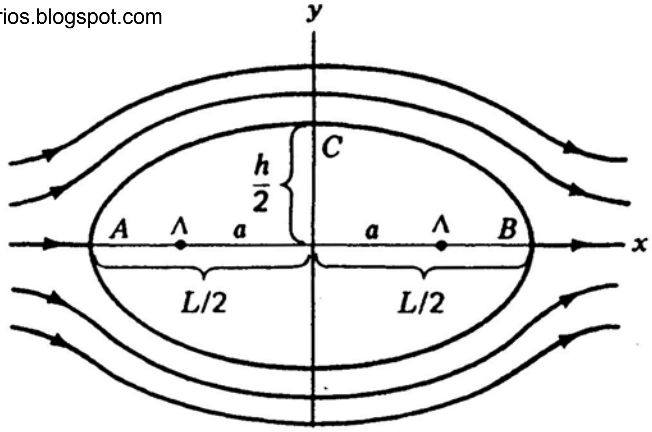


Go to Prob. 12.49

$$\frac{L}{a} = 2\left(1 + \frac{\Lambda}{\pi V_0 a}\right)^{\frac{1}{2}}$$

$$\frac{4}{a} = 2\left(1 + \frac{6}{(\pi)(8)(a)}\right)^{\frac{1}{2}}$$

$$2 = a\left(1 + \frac{.2387}{a}\right)^{\frac{1}{2}}$$

Solve for $a$ by trial and error.

$$a = 1.883\ m$$

Now go to Prob. 12.49.

$$\frac{h}{a} = 2\tan\left(\frac{\pi}{2} - \frac{\pi V_0 h}{2\Lambda}\right)$$

Insert numerical data.

$$\frac{h}{1.883} = 2\tan\left[\frac{\pi}{2}\left(1 - \frac{8h}{6}\right)\right]$$

$$.2655 = \frac{1}{h}\tan\left[\frac{\pi}{2}(1 - 1.333h)\right]$$

Solve for $h$ by trial and error.

$$\boxed{h = .667\ m}$$

http://ingesolucionarios.blogspot.com

http://ingesolucionarios.blogspot.com

A potential flow with a free stream uniform velocity of 5 m/s flows over a long semicircular bump. If the free stream pressure is 101,325 Pa and temperature is 60°C, what is the force from the flow on the bump per unit length of the hump? The radius of the hump is 2 m.

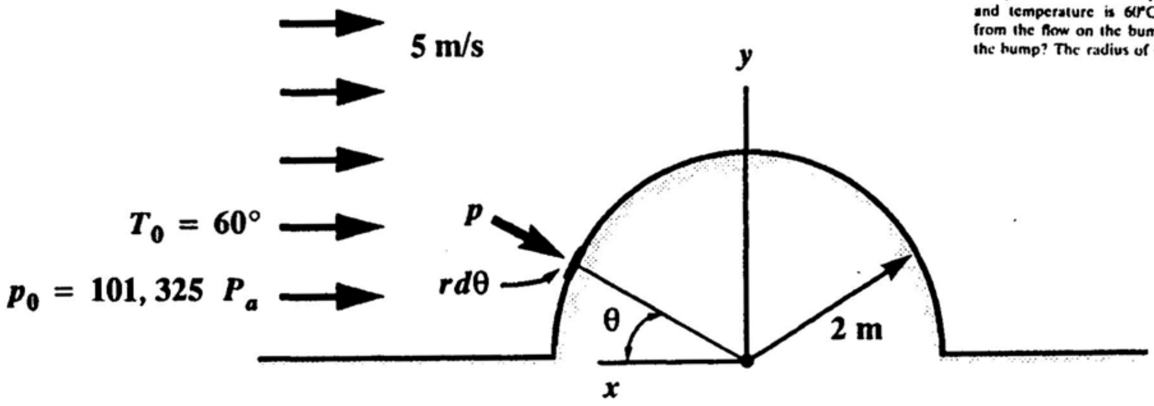


From Eq. 12.103

$$p_b = \gamma\left[\frac{V_0^2}{2g} + \frac{p_0}{\gamma} - \frac{(2V_0 \sin\theta)^2}{2g}\right] = \frac{\rho V_0^2}{2} + p_0 - \frac{\rho(2V_0\sin\theta)^2}{2}$$

For $\rho$ use **Eq. of State** at free stream.

$$p\frac{1}{\rho} = RT$$

$$\rho = \frac{p}{RT} = \frac{101,325}{(287)(273+60)} = 1.0602\ kg/m^3$$

$$p_b = \frac{1.0602}{2}(5)^2 + 101,325 - \frac{(1.0602)(100\sin^2\theta)}{2} = 101,338 - 53.01\sin^2\theta$$

$$F_V = \int_0^\pi p(r\,d\theta)\sin\theta = \int_0^\pi (101,338 - 53.01\sin^2\theta)(2)(\sin\theta\, d\theta)$$

$$= \int_0^\pi (202,676\sin\theta - 106.02\sin^3\theta)d\theta = -202,676\cos\theta\Big|_0^\pi - 106.02\int_0^\pi \sin^3\theta\, d\theta$$

$$= (202,676)(2) - 106.02\left[-\frac{1}{3}\cos\theta(\sin^2\theta+2)\right]\Big|_0^\pi = 405,352 + 35.34\,[-1(0+2) - 1(0+2)]$$

$$= 405,352 - 4(35.34)$$

$$\therefore \quad \boxed{F_V = 405,211\quad N}$$

In the previous problem, assume we have the potential flow over *half* the cylinder essentially the same as that of a semicylinder but that separation takes place at the top with no pressure recovery. What would the drag be on the half cylinder per unit length?

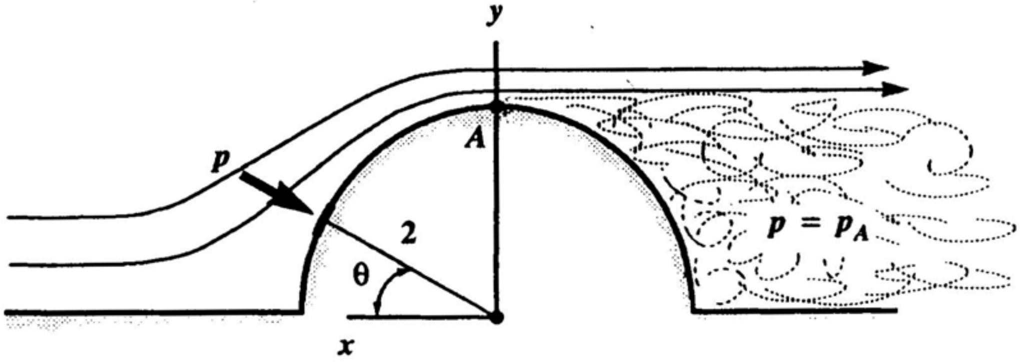


From Eq. (12.91)

$$p_b = \gamma\left[\frac{V_0^2}{2g} + \frac{p_0}{\gamma} - \frac{(2\,V_0 \sin\theta)^2}{2g}\right] = \frac{\rho V_0^2}{2} + p_0 - \rho\,\frac{(2\,V_0 \sin\theta)^2}{2}$$

For $\rho$ use **Eq. of State** at free stream.

$$\rho = \frac{p}{RT} = \frac{101{,}325}{(287)(333)} = 1.0602\ kg/m^3$$

$$\therefore\ \ p_b = \frac{1.0602}{2}(5^2) + 101{,}325 - (1.0602)\,\frac{(100 \sin^2\theta)}{2}$$

$$p_b = 101{,}338 - 53 \sin^2\theta$$

At $A$, $\theta = \frac{\pi}{2}$

$$\therefore\ \ p_b = 101{,}338 - 53 = \boxed{101{,}285\ Pa}$$

http://ingesolucionarios.blogspot.com
**(cont.)**

$$DRAG = \int_0^{\frac{\pi}{2}} p_b(r\,d\theta)\cos\theta - (101{,}285)(2)$$

$$= \int_0^{\frac{\pi}{2}} (101{,}338 - 53\sin^2\theta)(2)\cos\theta\,d\theta - 202{,}570$$

$$= \int_0^{\frac{\pi}{2}} 202{,}676\cos\theta\,d\theta - 106\int_0^{\frac{\pi}{2}} \sin^2\theta\cos\theta\,d\theta - 202{,}570$$

$$= (202{,}676)\sin\theta\Big|_0^{\frac{\pi}{2}} - 106\,\frac{\sin^3\theta}{3}\Big|_0^{\frac{\pi}{2}} - 202{,}570$$

$$= 202{,}676 - \frac{106}{3} - 202{,}570$$

$$D = 70.7\ N$$

http://ingesolucionarios.blogspot.com



A doublet distributed along the $x$ axis is of strength $\chi = 6\ m^3/(s)(m)$. It is developed along and issues in the direction

$$v = 0.6\mathbf{j} + 0.8\mathbf{k}$$

What is the velocity at position

$$r = 3\mathbf{i} + 2\mathbf{j} + 4\mathbf{k}\ m$$

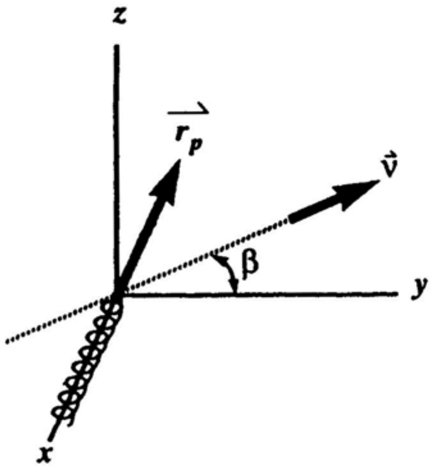


Use **projection** of $\vec{r}$ in $xz$ plane denoted as $\vec{r}_p$ .

$$\cos\alpha = \frac{\vec{r}_p \cdot \hat{v}}{|\vec{r}|} = \frac{(2\hat{j} + 4\hat{k})\cdot(.6\hat{j} + .8\hat{k})}{\sqrt{2^2+4^2}} = \frac{1.2 + 3.2}{\sqrt{20}} = .9839$$

$$\boxed{\alpha = 10.305°}$$

$$\phi = -\frac{\chi\cos\theta}{r} = -\frac{6\cos\theta}{r}$$

$$\begin{cases} (V_r)_v = \dfrac{\partial\phi}{\partial r} = \dfrac{6\cos\theta}{r^2} \\ (V_\theta)_v = \dfrac{\partial\phi}{r\partial\theta} = \dfrac{6\sin\theta}{r^2} \end{cases}$$

$$\theta = \alpha = 10.305°$$



http://ingesolucionarios.blogspot.com
Edu_Zegarr_ch

http://ingesolucionarios.blogspot.com

**(cont.)**

$$r = r_p = \sqrt{2^2 + 4^2} = 4.472$$

$$(V_r)_v = \frac{6 \cos 10.305}{4.472^2} = .2952 \;\; m/s$$

$$(V_\theta)_v = \frac{6 \sin 10.305}{4.472^2} = .0537 \;\; m/s$$

$$\beta = \tan^{-1} \frac{.8}{.6} = 53.13°$$

$$\therefore \quad V_y = (V_r)_v \cos(\alpha + \beta) - (V_\theta)_v \sin(\alpha + \beta)$$

$$= (.2952)\cos(10.305 + 53.13) - (.0537)\sin(10.305 + 53.13) = .0840 \;\; m/s$$

$$V_y = (V_r)_v \sin(63.44) + (V_\theta)_v \cos(63.44)$$

$$= .2952 \sin(63.44) + .0537 \cos(63.44) = .2881$$

$$\vec{V} = .0840\hat{j} + .2881\hat{k} \quad m/s$$



http://ingesolucionarios.blogspot.com Edu_Zegarr_ch

http://ingesolucionarios.blogspot.com

A source of strength $\Lambda_1 = 3\ m^3/(s)(m)$ is oriented normal to the $xy$ plane at position $x = 3$ m, $y = 5$ m. A doublet is at the origin with strength $\chi = 4\ m^3/(s)(m)$ and issues in the plus $x$ direction. A uniform flow of speed 6 m/s is directed in the $+y$ direction. What is the velocity at position

$$\mathbf{r} = -4\mathbf{i} + 6\mathbf{j} + 3\mathbf{k}\ \text{m}$$

when these two flows are superposed?

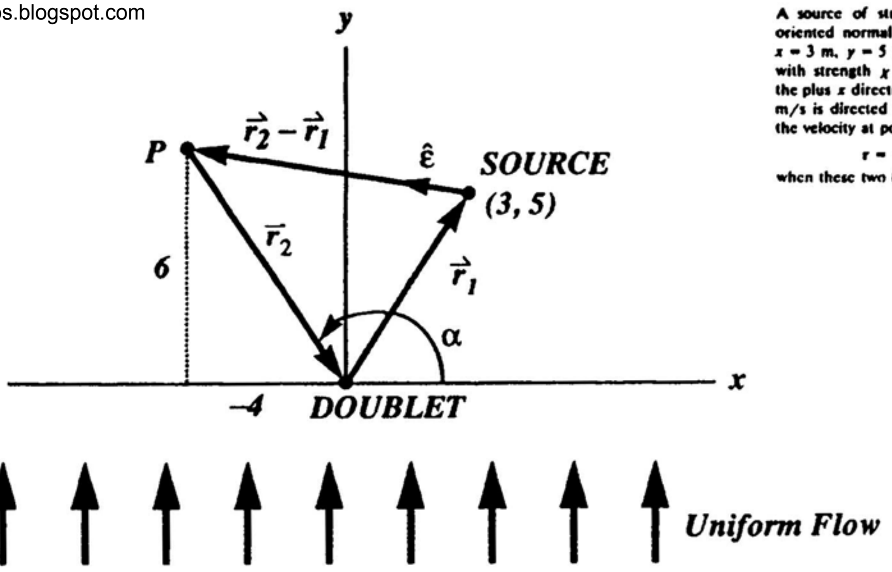


a) **Look at Source**

$$\vec{r}_2 - \vec{r}_1 = (-4\hat{i} + 6\hat{j}) - (3\hat{i} + 5\hat{j}) = -7\hat{i} + \hat{j} \quad m$$

$$\hat{\varepsilon} = \frac{(\vec{r}_2 - \vec{r}_1)}{|\vec{r}_2 - \vec{r}_1|} = \frac{-7\hat{i} + \hat{j}}{\sqrt{49+1}} = -.9899\hat{i} + .1414\hat{j}$$

$$(V_r)_{SOURCE} = \frac{\Lambda}{2\pi r} = \frac{3}{(2\pi)(7.071)} = .0675 \quad m/s$$

$$\begin{cases} V_x = (.0675)(-.9899) = -.0668\ m/s \\ V_y = (.0675)(.1414) = .009545\ m/s \end{cases}$$

b) **Look at Doublet**

$$\begin{cases} V_r = \dfrac{4\cos\theta}{r^2} & \theta = \alpha = 123.7° \\ V_\theta = \dfrac{4\sin\theta}{r^2} & r_2 = \sqrt{6^2+4^2} = 7.21 \end{cases}$$

$$V_r = \frac{4\cos(123.7)}{7.21^2} = -.0427$$

$$V_\theta = \frac{4\sin(123.7)}{7.21^2} = .06402$$

http://ingesolucionarios.blogspot.com Edu_Zegarr_ch

http://ingesolucionarios.blogspot.com
(cont.)

$$\begin{cases} V_x = (.04269)(\cos 56.3°) + (-.06402)\sin 56.3° = -.02958 \ m/s \\ V_y = (-.04269)(\sin 56.3°) - (.06402)\cos 56.3° = -.07104 \ m/s \end{cases}$$

c) **Uniform Flow**

$$\begin{cases} V_y = 6 \quad m/s \\ V_x = 0 \end{cases}$$

The total velocity at P

$$\begin{cases} V_x = -.0668 - .02958 + 0 = -.09638 \ m/s \\ V_y = .009545 - .07104 + 6 = 5.939 \ m/s \\ V_z = 0 \end{cases}$$

$$\boxed{\vec{V} = -.09638\hat{i} + 5.939\hat{j}}$$

http://ingesolucionarios.blogspot.com Edu_Zegarr_ch

http://ingesolucionarios.blogspot.com

A thin-walled tank in Fig. formed from two semicylinders having an outside diameter of 3 m and a length of 10 m sits on end outdoors exposed to a wind of speed 10 km/h. If the inside pressure is 200 Pa gage and if there are 10 bolts each side, what is tensile stress per bolt as a result of the inside and outside pressures? The cross-sectional area of each bolt is 12 mm². Take $\rho_{air}$ = 1.225 kg/m³ and note that $\int \sin^3\theta\, d\theta = -\frac{1}{3}\cos\theta(\sin^2\theta + 2)$.

We will use potential flow on the outside. We compute first the lift on one of the semicylinders.

Consider unit length of semicylinder. On outside we have:

$$p_B = \gamma\left[\frac{V_0^2}{2g} + \frac{p_0}{\gamma} - \frac{(2V_0\sin\theta)^2}{2g}\right]$$

Downward force $F_1$ on semicylinder from outside flow is:

$$F_1 = -\int_0^\pi (r d\theta)\,(1)\,(p_B)\sin\theta =$$

$$-r\int_0^\pi \gamma\left[\frac{V_0^2}{2g} + \frac{p_0}{\gamma} - \frac{(2V_0\sin\theta)^2}{2g}\right]\sin\theta d\theta - 1.5\gamma\int_0^\pi\left[\left(\frac{V_0^2}{2g} + \frac{p_0}{\gamma}\right)\sin\theta - \frac{4V_0^2}{2g}\sin^3\theta\right]d\theta$$

Using gage pressures, $p_0 = 0$. We then have:

$$F_1 = -1.5\gamma\left\{\frac{V_0^2}{2g}(-\cos\theta)\Big|_0^\pi - \frac{4V_0^2}{2g}\left[-\frac{1}{3}\cos\theta(\sin^2\theta + 2)\right]\Big|_0^\pi\right\}$$

$$= -\frac{1.5}{2}\left(\frac{\gamma}{g}\right)V_0^2\left\{2 - 4\left[-\frac{1}{3}(-1)(2) + \frac{1}{3}(1)(2)\right]\right\}$$

$$= -\frac{1.5}{2}\rho V_0^2\left\{2 - \frac{16}{3}\right\} = \left(\frac{1.5}{2}\right)(\rho)\left(\frac{10}{3.6}\right)^2\left(\frac{10}{3}\right)$$

$$= \left(\frac{1.5}{2}\right)(1.225)\left(\frac{10}{3.6}\right)^2\left(\frac{10}{3}\right) = 23.63 \quad \text{N}$$

$$\therefore \quad 10F = 236.3 \text{ N}$$

From *inside* we get upward force using gage pressure:

$$F_2 = (200)\,(10)\,(3) = 6000 \quad \text{N}$$

Total upward force is:

$$F_T = 6000 + 236.3 = 6236.3 \quad \text{N}$$

Per bolt

$$F_B = \frac{6236.3}{20} = 311.815$$

$$\tau = \frac{311.815}{12\times 10^{-6}} = 2.598\times 10^7 \quad \text{Pa}$$

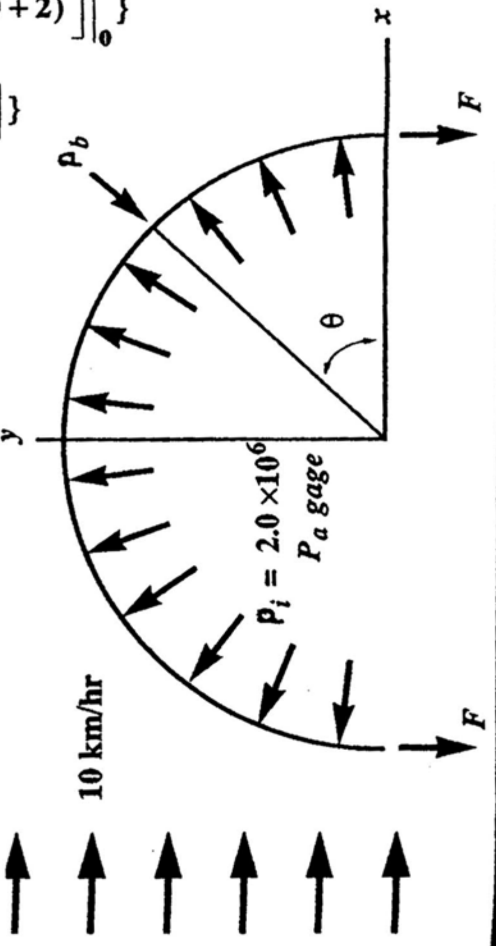


http://ingesolucionarios.blogspot.com

http://ingesolucionarios.blogspot.com

11.58

A horizontal circular cylinder of diameter 6 ft is rotating at a rate of speed $\omega$ of 400 r/min and is moving through the air at a speed of 300 ft/s. What is the lift per unit length of the cylinder if the circulation is 40 percent of the maximum possible circulation? $\rho = 0.002378$ slug/ft$^3$.

$$L = \rho V \Gamma$$

$$\Gamma_{max} = \oint \vec{V} \cdot d\vec{\ell} = \int_0^{2\pi} (\omega)(r) r \, d\theta$$

$$= \omega r^2 (2\pi) = (400)\left(\frac{2\pi}{60}\right)(9)(2\pi) = 2{,}369 \ ft^2/\text{sec}$$

$$L = (.002378)(300)(.40)(2{,}369) = 676 \ lb/ft$$



http://ingesolucionarios.blogspot.com Edu_Zegarr_ch

http://ingesolucionarios.blogspot.com

11.59

There were early attempts in the development of the airplane to use two rotating cylinders as airfoils. Consider such cylinders each having a diameter of 3 ft and length of 30 ft. If each cylinder is rotated at 800 r/min while the plane moves at a speed of 60 mi/h through the air at 2000 ft standard atmosphere, estimate the lift that could be developed on the plane disregarding end effects. Assume the circulation for the cylinder is 35 percent of the theoretical maximum.

$$L = \rho V_0 \Gamma$$

$$\rho = (0.9428)\,(0.002378)$$

$$V_0 = 88 \text{ ft/sec}$$

To get $\Gamma$ assume fluid has same speed as periphery of the cylinder. Then:

$$\Gamma_{max} = \int_0^{2\pi} V_\theta r d\theta = \left[\frac{2\pi\,(800)}{60}\,(\tfrac{3}{2})\,(\tfrac{3}{2})\,(2\pi)\right] = 1184 \quad \text{ft}^2/\text{sec}$$

$$\therefore\; L = (0.9428)\,(0.002378)\,(88)\,(1184) = 233.7 \text{ lb/ft.}$$

The total estimated lift would be for the two rotors:

$$\text{LIFT} = (0.35)\,(2)\,(233.7)\,(30) = \boxed{4907 \text{ lb.}}$$

 http://ingesolucionarios.blogspot.com

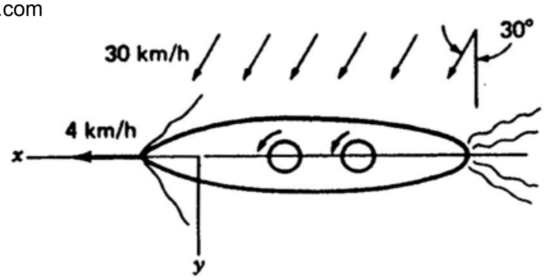


In Example 11.2, suppose that the wind is oriented at an angle of 30° as shown in Fig. P12.60 and that 45 percent of the maximum circulation is developed by the rotors. If the drag coefficient is one-third the lift coefficient for the rotors, what is the thrust in the $x$ direction from the rotors? All other data are unchanged.

$$\vec{V}_{rel} = [30(\sin 30°)\hat{i} + 30(\cos 30°)\hat{j}] - 4\hat{i} = 11\hat{i} + 25.98\hat{j} \quad \text{km/hr}$$

$$V_{rel} = \sqrt{11^2 + 25.98^2} = 28.21 \text{ km/hr} = 7.837 \text{ m/sec}$$

$$\Gamma = (\omega r)(2\pi r)(0.45) = \left(750\frac{2\pi}{60}\right)(1.375)^2(2\pi)(0.45) = 419.8 \quad \text{m}^2\text{/s}$$

$$F_T = 2[\rho V_{rel}\Gamma] = 2[(1.229)(7.837)(419.8)] = 8.087 \quad \text{kN/m}$$

$$\text{Total Lift Force} = (8.087)(15) = 121.3 \text{ kN}$$

$$D = \frac{1}{3}(121.3) = 40.4 \text{ kN}$$

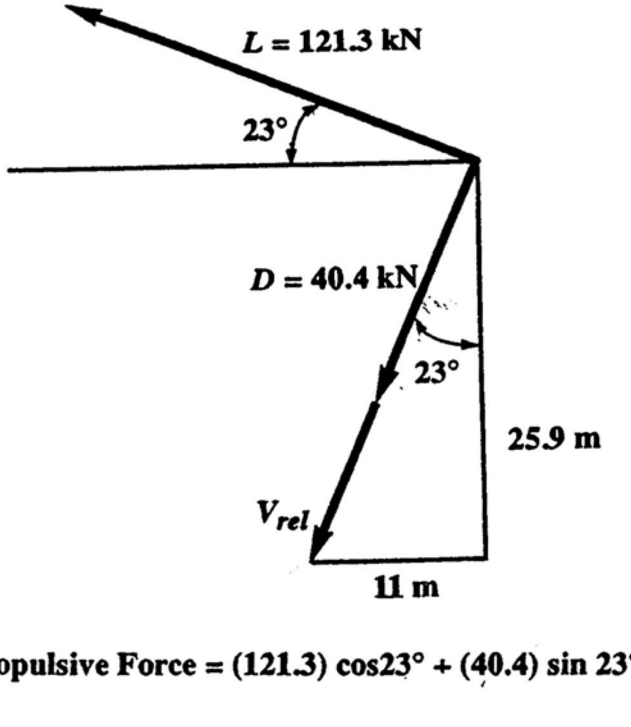


Propulsive Force = (121.3) cos23° + (40.4) sin 23°

**Propulsive Force = 127.4 kN**



http://ingesolucionarios.blogspot.com Edu_Zegarr_ch

http://ingesolucionarios.blogspot.com
11.61

In Prob. 11.60, locate the stagnation points for the condition of circulation that was employed.

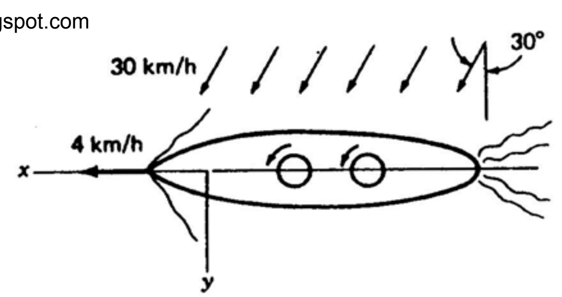


The circulation of this case is:

$$\Gamma = (\omega r)(2\pi r)(0.35) = \left[\frac{(800)(2\pi)}{60}\right](1.5)^2(2\pi)(0.35) = 414.5 \quad \text{ft}^2/\text{s}$$

Now go to ***Eq. 11:99*** for the positions of the stagnation points. We first find $\chi$. Thus:

$$r^2 = \frac{\chi}{V_0}$$

$$\chi = r^2 V_0 = (1.5)^2(88)$$

Now we have:

$$\theta = \sin^{-1}\left(-\frac{\Lambda}{4\pi(\chi V_0)^{1/2}}\right)$$

Since $\Gamma = \Lambda$ here, we have

$$\theta = \sin^{-1}\left(\frac{-414.5}{4\pi[(198)(88)]^{1/2}}\right)$$

$\theta_1 = -14.47°$

and

$\theta_2 = -194.5°$

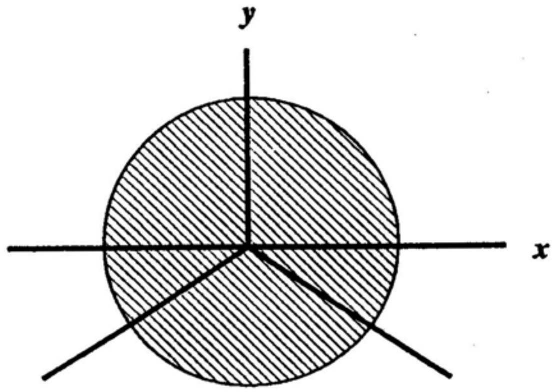

http://ingesolucionarios.blogspot.com

A windmill in Fig. 11.61 is composed of rotating cylinders and operates according to the Magnus effect. The windmill rotates with angular speed $\omega_1 = 40$ r/min relative to the ground. The cylinders rotate with angular speed $\omega_2 = 750$ r/min relative to the windmill. A wind of velocity 50 km/h goes directly toward the windmill. If the circulation around the cylinder is 60 percent of the theoretical maximum, what is the total torque on the windmill?

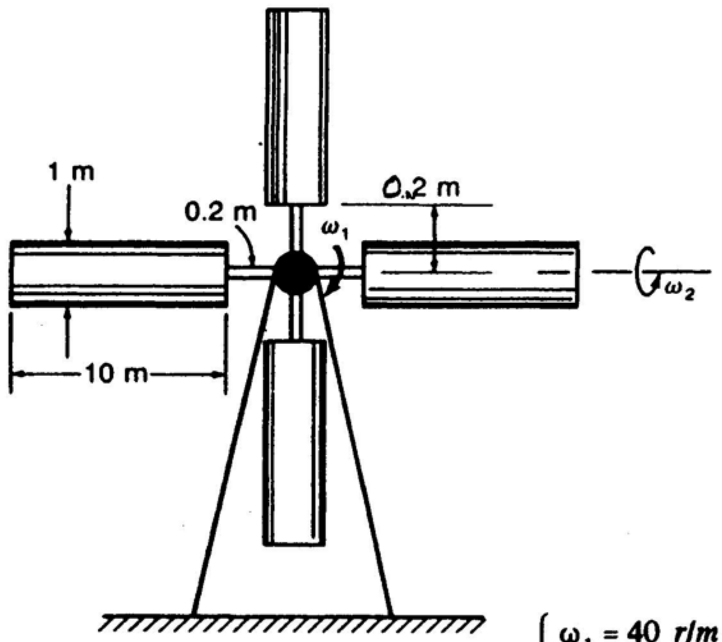


$$\begin{cases} \omega_1 = 40 \ r/m \\ \omega_2 = 750 \ r/m \\ U = 50 \ km/hr \\ 60° F \end{cases}$$

Disregard velocity due to rotation $\omega_1$

$$\Gamma_{max} = \left[\left(\frac{1}{2}\right)\frac{(750)(2\pi)}{60}\right](\pi)(1) = 123.37 \ ft^2/s$$

$$TORQUE = (.60)(\rho V \Gamma)(10)(5.2)(4)$$

$$= (60)(1.002)\left[(50)\left(\frac{1,000}{3,600}\right)\right](123.3)(10)(5.2)(4)$$

$$\boxed{TORQUE = 2.14\times10^5 \quad N\text{-}m}$$


http://ingesolucionarios.blogspot.com

Edu_Zegarr_ch

http://ingesolucionarios.blogspot.com

11.63

A wind turbine with three rotating cylinders in Fig. 11.62 has been designed and built by Thomas Hansen under a federal grant. If each cylinder is rotating about each of the axes at 100 r/min, what is the starting torque to get these axes rotating about axis A-A if a 30 mi/h wind is blowing as shown? The circulation actually developed per cylinder is 40 percent of the maximum possible circulation. Take $\rho = 0.002378\ slug/ft^3$.

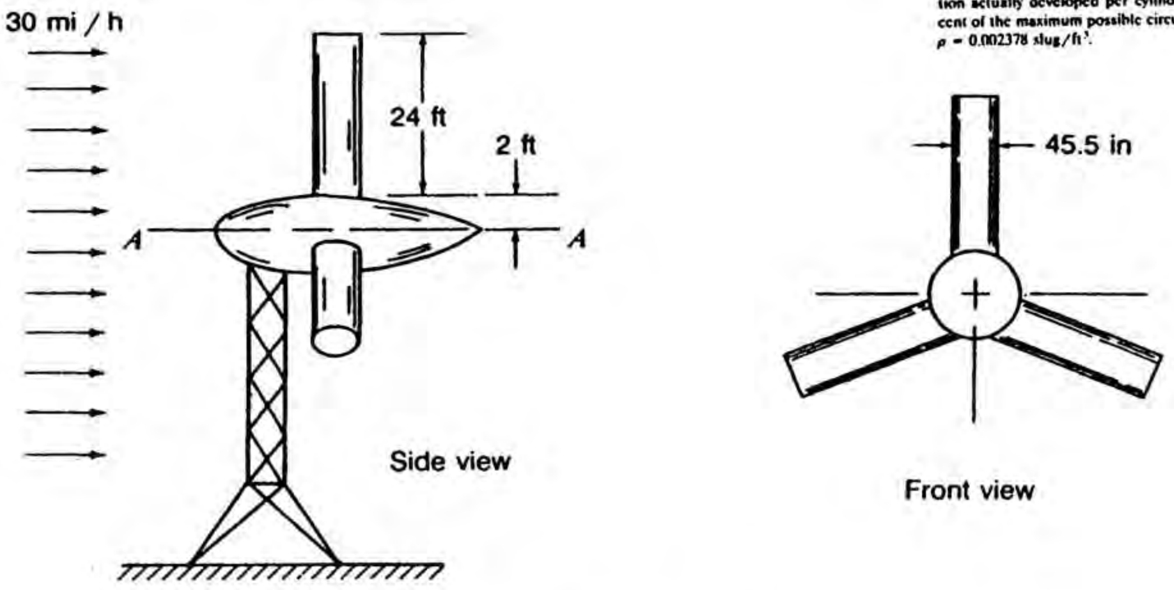


$$\Gamma = (2\pi r)(V) = (2\pi r)(\omega r)$$

$$\Gamma_{max} = 2\pi\left(\frac{45.5}{(12)(2)}\right)\left(\frac{100}{60}\right)(2\pi)\left(\frac{45.5}{(12)(2)}\right) = 236.5\ ft^2/sec$$

$$\Gamma_{actual} = (.40)(\Gamma_{max}) = 94.595$$

$$L = \rho V \Gamma = (.002378)(30)\left(\frac{5{,}280}{3{,}600}\right)(94.595)$$

$$L = 9.898\ lb/ft = (9.898)(24) = 237.5\ lb$$

$$\text{Torque Per Cylinder} = (237.5)(14) = 3{,}325.6\ ft\text{-}lb$$

For cylinders:

$$(TORQUE)_{TOTAL} = 9{,}977\ ft\text{-}lb$$



http://ingesolucionarios.blogspot.com Edu_Zegarr_ch

http://ingesolucionarios.blogspot.com

# CHAPTER 12

http://ingesolucionarios.blogspot.com
Edu_Zegarr_ch

12.1

**The flow over a flat plate is shown**
**The velocity outside the boundary layer is uniform and equal to $U$, while inside the boundary layer is a parabolic profile. What is the displacement thickness $\delta^*$ in terms of $\delta$?**

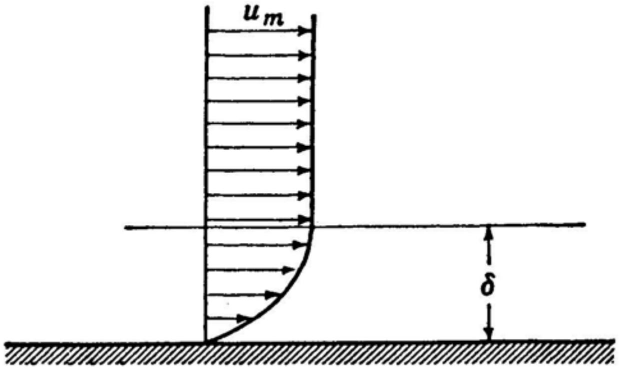


We can say for the profile that: $y = au^2 + b$

When $y=0$ , $u=0$ $\therefore \quad b = 0$

When $y=\delta$ , $u = U$ $\delta = aU^2$

$$\therefore \quad a = \frac{\delta}{U^2}$$

Hence we have: $u = \left[\frac{y}{\delta}\right]^{\frac{1}{2}} U$

Compute $\delta^*$ $\delta^* = \int_0^\delta \left[1 - \left(\frac{y}{\delta}\right)^{\frac{1}{2}}\right] dy$

$$\delta^* = \delta - \frac{\delta^{\frac{3}{2}}}{\delta^{\frac{1}{2}}}\left(\frac{2}{3}\right) = \frac{\delta}{3}$$

http://ingesolucionarios.blogspot.com

**Using a cubic profile $\alpha y + \beta y^3$ for the laminar boundary layer, show that $\delta/x = 4.64\ \mathrm{Re}^{-1/2}$ by using the von Kármán momentum integral equation for a flat plate with a zero pressure gradient.**

Start with $$u = \alpha y + \beta y^3$$

when

$$\begin{cases} y = 0\ ,\ u = 0 & \text{(a)} \\ y = \delta\ ,\ u = U & \text{(b)} \\ y = \delta\ ,\ \dfrac{du}{dy} = 0 & \text{(c)} \end{cases}$$

Condition (a) is automatically satisfied. Examine conditions (b) and (c).

$$U = \alpha\delta + \beta\delta^3 \qquad \text{(d)}$$

$$0 = \alpha + 3\beta\delta^2 \qquad \text{(e)}$$

From (e) we have: $\alpha = -3\beta\delta^2$

And from (d) we get: $U = (-3\beta\delta^3) + \beta\delta^3 = -2\beta\delta^3$

$$\beta = -\frac{U}{2\delta^3}$$

And so: $$\alpha = -3\left(\frac{-U}{2\delta^3}\right)\delta^2 = \left(\frac{3}{2}\right)\left(\frac{U}{\delta}\right)$$

Hence: $$u = \left(\frac{3}{2}\right)U\left(\frac{y}{\delta}\right) - \left(\frac{1}{2}\right)U\left(\frac{y^3}{\delta^3}\right)$$

Now go to Eq. (12.41). Using **Newton's viscosity** law we have:

$$-\mu\left(\frac{du}{dy}\right)_w = \frac{d}{dx}\left[\int_0^\delta \rho(u^2 - Uu)dy\right]$$

Dividing through by $\rho$ we have:

http://ingesolucionarios.blogspot.com

**(cont.)**

$$-\nu\left(\frac{du}{dy}\right)_w = \frac{d}{dx}\int_0^\delta \left\{\left[\left(\frac{3}{2}\right)\frac{U}{\delta}y - \frac{1}{2}\frac{U}{\delta^3}y^3\right]^2 - \left[\left(\frac{3}{2}\right)\frac{U^2}{\delta}y - \left(\frac{1}{2}\right)\frac{U^2}{\delta^3}y^3\right]\right\}dy$$

Note that:

$$\left(\frac{du}{dy}\right)_w = \left(\frac{du}{dy}\right)_{y=0} = \frac{3}{2}\frac{U}{\delta}$$

Hence we get:

$$-\nu\left[\left(\frac{3}{2}\right)\frac{U}{\delta}\right] = \frac{d}{dx}\left\{U^2\left[\left(\frac{9}{12}\right)\frac{y^3}{\delta^2} - \left(\frac{3}{10}\right)\frac{y^5}{\delta^4} + \frac{y^7}{28\delta^6} - \frac{3}{4}\frac{y^2}{\delta} + \left(\frac{1}{8}\right)\frac{y^4}{\delta^3}\right]\right|_0^\delta$$

$$= \frac{d}{dx}\left[-U^2\left(\frac{39}{280}\right)\delta\right] = -U^2\left(\frac{39}{280}\right)\frac{d\delta}{dx}$$

Separate variables:

$$\frac{840\nu}{(2)(39)U}dx = \delta\, d\delta$$

Integrate:

$$\delta^2 = \frac{840\nu}{39U}x + C_1$$

Take $\delta=0$ when $x=0$ . Hence $C_1=0$ .

$$\delta = \sqrt{21.6\frac{\nu x}{U}}$$

$$\therefore\quad \frac{\delta}{x} = 4.64\sqrt{\frac{\nu}{x\,U}} = 4.64Re^{-\frac{1}{2}}$$

12.3

For the cubic profile, where $u = \frac{3}{2}U(y/\delta) - \frac{1}{2}U(y/\delta)^3$, find $\delta^*/x$ using Eq. (13.51b) for $\delta$. Check your result against Eq. (13.51c).

$$\delta^* = \int_0^\delta \left[1 - \left(\frac{3}{2}\right)\left(\frac{y}{\delta}\right) + \left(\frac{1}{2}\right)\left(\frac{y}{\delta}\right)^3\right] dy$$

$$\delta^* = \left[y - \left(\frac{3}{2}\right)\left(\frac{1}{\delta}\right)\left(\frac{y^2}{2}\right) + \left(\frac{1}{2}\right)\left(\frac{1}{\delta^3}\right)\left(\frac{y^4}{4}\right)\right]\Bigg|_0^\delta$$

$$\delta^* = \delta - \left(\frac{3}{4}\right)\delta + \left(\frac{1}{8}\right)\delta = \left(\frac{3}{8}\right)\delta$$

**Replace** $\delta$ **using** $\frac{\delta}{x} = 4.64Re^{-1/2}$

$$\delta^* = \left(\frac{3}{8}\right)(x)(4.64)Re^{-\frac{1}{2}}$$

$$\left(\frac{\delta^*}{x}\right) = \frac{3}{8}(4.64)Re^{-\frac{1}{2}} = \boxed{\frac{1.740}{\sqrt{Re}}}$$

12.4 Use $\frac{1}{4}$ of a cycle of a sine wave whose length is $4\delta$. Hence:

$$u = U \sin \frac{\pi y}{2\delta}$$

$$\delta^* = \int_0^\delta \left(1 - \sin\frac{\pi y}{2\delta}\right) dy = \left\{y + \left[\cos\frac{\pi y}{2\delta}\right]\left(\frac{2\delta}{\pi}\right)\right\}\Bigg|_0^\delta$$

$$= \left[\delta + \left(\cos\frac{\pi\delta}{2\delta}\right)\left(\frac{2\delta}{\pi}\right) - \frac{2\delta}{\pi}\right] = \delta[1 - .637]$$

$$\boxed{\delta^* = .363\delta}$$

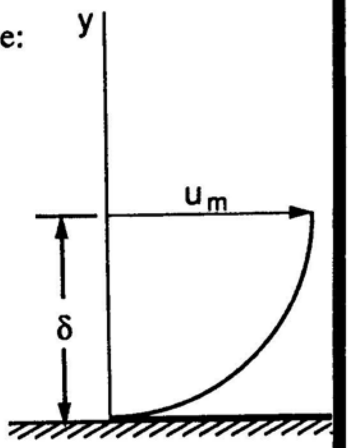


Give an expression for the velocity profile in a laminar boundary layer wherein this profile is sinusoidal and fits the boundary conditions at $y = 0$ and $y = \delta$. Determine $\delta^*$ as a function of $\delta$.

http://ingesolucionarios.blogspot.com

12.5 **Now go to Eq.** (12.41) **and substitute for** $u$ **using results of Prob.** 12.4.

**With the profile found in Prob. 12.4 [$u = U\sin(\pi y/2\delta)$], determine the ratio $\delta/x$, using the von Kármán momentum-integral equation for a zero pressure gradient. What is the percentage error of your result as compared with the exact solution of Blasius? Using the result $\delta^* = 0.363\ \delta$ from the preceding problem, compute $\delta^*/x$.**

$$-\mu\left(\frac{du}{dy}\right)_{y=0} = \frac{d}{dx}\int_0^{\delta}\rho U^2\left(\sin^2\frac{\pi y}{2\delta} - \sin\frac{\pi y}{2\delta}\right)dy$$

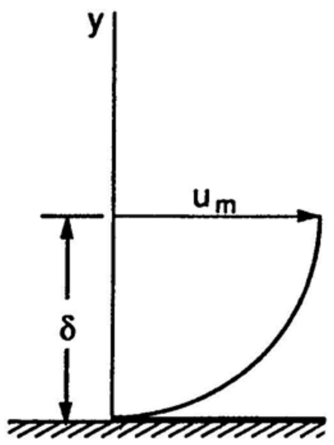


$$-\frac{\nu\pi}{2\delta U} = \frac{d}{dx}\left[\frac{\delta}{2} - \frac{2\delta}{\pi}\right] = \left(\frac{1}{2} - \frac{2}{\pi}\right)\frac{d\delta}{dx}$$

**Separate variables:**

$$-\frac{\nu\pi}{2\left(\frac{1}{2} - \frac{2}{\pi}\right)U}dx = \delta\, d\delta$$

$$\therefore\quad \delta^2 = -\frac{\nu\pi}{\left(\frac{1}{2} - \frac{2}{\pi}\right)U}x + C_1$$

**When** $y=0$ , $\delta=0$ , $\therefore$ $C_1=0$ .

$$\left(\frac{\delta}{x}\right)^2 = \frac{\upsilon}{Ux}(23.0)$$

$$\therefore\quad \boxed{\frac{\delta}{x} = 4.80Re^{-\frac{1}{2}}}$$

The error incurred is

$$\frac{4.96-4.80}{4.96}(100) = 3.32\%$$

$$\delta^* = (.363)(x)(4.81)Re^{-\frac{1}{2}}$$

$$\boxed{\frac{\delta^*}{x} = 1.742Re^{-\frac{1}{2}}}$$

http://ingesolucionarios.blogspot.com

**Work out the expression for shear stress $\tau_w$ at the wall for flow over a flat plate wherein a laminar boundary layer is present for the case of a zero pressure gradient. Use the parabolic profile as discussed in the text. Results should be put in the form $\tau_w = 0.365\, \rho U^2\, Re^{-1/2}$.**

$$\frac{\delta}{x} = 5.48\, Re^{-\frac{1}{2}} \tag{a}$$

$$u = 2U\left(\frac{y}{\delta}\right) - U\left(\frac{y}{\delta}\right)^2$$

$$\left(\frac{du}{dy}\right)_{y=0} = \frac{2U}{\delta}$$

$$\therefore \quad \tau_w = \mu\left(\frac{2U}{\delta}\right) = \mu \frac{2U}{\left(\frac{\delta}{x}\right)x}$$

Now substitute for $\delta/x$ from Eq. (a)

$$\tau_w = \frac{\mu 2U}{x} \frac{\left(\frac{\rho U x}{\mu}\right)^{\frac{1}{2}}}{5.48}$$

Multiply and divide by:

$$\left(\frac{\rho U x}{\mu}\right)^{\frac{1}{2}}$$

$$\tau_w = \frac{\mu 2U\left(\frac{\rho U x}{\mu}\right)}{x\left(Re^{\frac{1}{2}}\right)(5.48)} = \boxed{\frac{.365\,\rho U^2}{Re^{\frac{1}{2}}}}$$

http://ingesolucionarios.blogspot.com
Edu_Zegarr_ch

 http://ingesolucionarios.blogspot.com

Perform the same computations as were asked for in Prob. 12.6, this time for the case of the cubic profile. Use the results of Prob. 12.2. Give result in the form $\tau_w = 0.323\rho U^2 \mathrm{Re}^{-1/2}$.

For a cubic profile we have the results:

$$\frac{\delta}{x} = 4.64\, Re^{-\frac{1}{2}} \qquad \text{(a)}$$

$$u = \frac{3}{2}U\left(\frac{y}{\delta}\right) - \frac{1}{2}U\left(\frac{y}{\delta}\right)^3$$

At wall

$$\left(\frac{\partial u}{\partial y}\right) = \frac{3}{2}\frac{U}{\delta}$$

$$\therefore \quad \tau_w = \mu\left(\frac{3}{2}\frac{U}{\delta}\right)$$

Substitute for $\delta$ using Eq. (a).

$$\tau_w = \mu\,\frac{3}{2}\,U\,\frac{Re^{\frac{1}{2}}}{x(4.64)}$$

Multiply by $Re^{1/2}$ in numerator and denominator. Thus:

$$\tau_w = \frac{\mu(.323)U}{x\,Re^{\frac{1}{2}}}\left(\frac{\rho U x}{\mu}\right)$$

$$\boxed{\tau_w = \frac{.323\rho U^2}{Re^{\frac{1}{2}}}}$$

http://ingesolucionarios.blogspot.com

Perform the same computations as were asked for in Prob. 12.6, this time for the case of the sinusoidal profile [$u = U\sin(\pi y/2\delta)$]. Use the results of Probs. 12.4 and 12.5. Put the result in the form $\tau_w = 0.327\,\rho U^2\,Re^{-1/2}$

From Prob. 12.5

$$\delta = 4.80\left(Re^{-\frac{1}{2}}\right)x \qquad \text{(a)}$$

$$u = U\sin\frac{\pi y}{2\delta} \qquad \text{(b)}$$

Accordingly:

$$\left(\frac{\partial u}{\partial y}\right)_0 = U\frac{\pi}{2\delta}$$

$$\therefore \quad \tau_w = \frac{\mu U\pi}{2\delta}$$

Now substitute for $\delta$ using Eq. (a).

$$\tau_w = \frac{\mu U\pi}{(2)(x)(4.80)}\left(Re^{\frac{1}{2}}\right)$$

Multiply and divide by $Re^{\frac{1}{2}}$

$$\boxed{\tau_w = .327\rho U^2\left(Re^{-\frac{1}{2}}\right)}$$

http://ingesolucionarios.blogspot.com Edu_Zegarr_ch 

http://ingesolucionarios.blogspot.com

12.9

Air moves over a flat plate with a uniform free-stream velocity of 30 ft/s. At a position 6 from the front edge of the plate, what is the boundary-layer thickness and what is the shear stress at the surface of the plate? Assume that the boundary layer is laminar. The air temperature is 100°F, and the pressure is 14.7 lb/in² absolute. Do this problem using the

(*a*) Parabolic profile in the boundary layer as examined in the text and Prob. 12.6.

(*b*) Cubic profile in the boundary layer examined in Probs. 12.2 and 12.7.

(*c*) Result from Blasius' analytical solution.

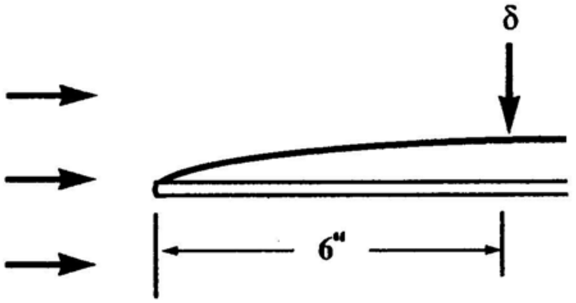


$U = 30 \quad ft/sec$

$T = 100°F$

$p = 14.7 \quad psia$

First compute $Re$ .

$$Re = \left(\frac{\rho U x}{\mu}\right) = \frac{(30)\left(\frac{1}{2}\right)}{1.9\times10^{-4}} = 7.89\times10^{4}$$

a) **Parabolic profile**

$$\frac{\delta}{x} = 5.48\, Re^{-\frac{1}{2}}$$

$$\delta = \frac{\left(\frac{1}{2}\right)(5.48)}{2.81\times10^{2}} = .00975 \quad ft$$

b) **Cubic profile**

$$\frac{\delta}{x} = 4.64\, Re^{-\frac{1}{2}}$$

$$\delta = .00826 \quad ft$$

c) **Blasius solution**

$$\frac{\delta}{x} = 4.96\, Re^{-\frac{1}{2}}$$

$$\boxed{\delta = .00883 \quad ft}$$

http://ingesolucionarios.blogspot.com

12.10

Water approaches a device for diverting a portion of the flow. The water is moving at a speed $U$ of 3 m/s and is at a temperature of 5°C. At what distance from $A$ along the horizontal part of the diverter will the laminar boundary layer be a thickness of 1.2 mm? Use Blasius' solution.

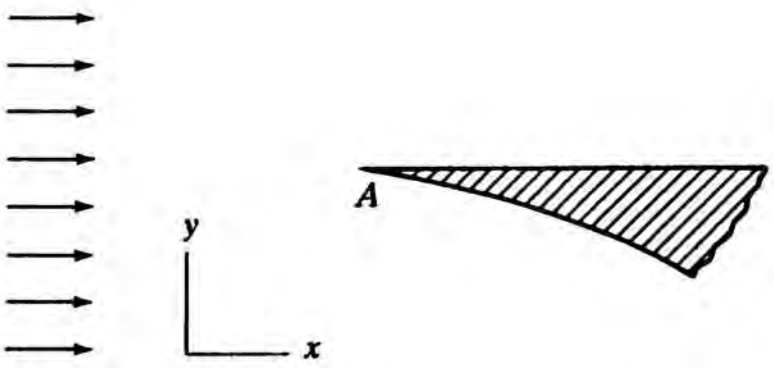


$$Re = \frac{Ux}{\nu} = \frac{(3)(x)}{1.519\times10^{-6}}$$

**From Blasius:**

$$\frac{\delta}{x} = 4.96\left[\frac{1.519\times10^{-6}}{3x}\right]^{\frac{1}{2}}$$

$$\frac{.0012}{x} = 4.96\left[\frac{1.519\times10^{-6}}{3x}\right]^{\frac{1}{2}}$$

$$\frac{.0012}{x^{\frac{1}{2}}} = 4.96\left[\frac{1.519\times10^{-6}}{3}\right]^{\frac{1}{2}}$$

$$x = .1156 \quad m$$

12.11

If the shear stress in a laminar boundary layer varies linearly from zero at $y = \delta$ to $\tau_w$ at $y = 0$, what is the momentum thickness?

$$\tau = \tau_w\left(1 - \frac{y}{\delta}\right) \quad , \quad \text{where} \quad \delta = \delta(x) \quad \text{only.}$$

$$\tau = \mu\left(\frac{du}{dy}\right)$$

$$\therefore \quad \tau_w\left(1 - \frac{y}{\delta}\right) = \mu\left(\frac{du}{dy}\right)$$

$$\frac{du}{dy} = \frac{\tau_w}{\mu}\left(1 - \frac{y}{\delta}\right)$$

$$u = \frac{\tau_w}{\mu}\left(y - \frac{y^2}{2\delta}\right) + C_1$$

When $y = 0$ , $u = 0$ $\therefore$ $C_1 = 0$ . When $y = \delta$ , $u = U$

$$U = \frac{\tau_w}{\mu}\left(\delta - \frac{\delta}{2}\right) = \left(\frac{\tau_w \delta}{2\mu}\right)$$

From Eq. (12.2) we have:

$$\theta = \int_0^\delta \frac{u}{\left(\dfrac{\tau_w \delta}{2\mu}\right)}\left[1 - \frac{u}{\dfrac{\tau_w \delta}{2\mu}}\right] dy$$

$$\theta = \int_0^\delta \frac{\dfrac{\tau_w}{\mu}\left(y - \dfrac{y^2}{2\delta}\right)}{\dfrac{\tau_w \delta}{2\mu}}\left[1 - \frac{\dfrac{\tau_w}{\mu}\left(y - \dfrac{y^2}{2\delta}\right)}{\dfrac{\tau_w}{2\mu}\delta}\right] dy = \int_0^\delta \left[2\left(\frac{y}{\delta}\right) - \left(\frac{y}{\delta}\right)^2\right]\left[1 - 2\left(\frac{y}{\delta}\right) + \left(\frac{y}{\delta}\right)^2\right] dy$$

http://ingesolucionarios.blogspot.com
**(cont.)**

**Multiply and divide by $\delta$. Change limit.**

$$\theta = \int_0^1 \delta\left[2\left(\frac{y}{\delta}\right) - \left(\frac{y}{\delta}\right)^2\right]\left[1 - 2\left(\frac{y}{\delta}\right) + \left(\frac{y}{\delta}\right)^2\right] d\left(\frac{y}{\delta}\right)$$

$$\theta = \delta \int_0^1 \left[2\left(\frac{y}{\delta}\right) - 4\left(\frac{y}{\delta}\right)^2 + 2\left(\frac{y}{\delta}\right)^3 - \left(\frac{y}{\delta}\right)^2 + 2\left(\frac{y}{\delta}\right)^3 - \left(\frac{y}{\delta}\right)^4\right] d\left(\frac{y}{\delta}\right)$$

$$\theta = \delta \int_0^1 \left[2\left(\frac{y}{\delta}\right) - 5\left(\frac{y}{\delta}\right)^2 + 4\left(\frac{y}{\delta}\right)^3 - \left(\frac{y}{\delta}\right)^4\right] d\left(\frac{y}{\delta}\right)$$

**Integrate**

$$\theta = \delta\left[1 - \frac{5}{3} + 1 - \frac{1}{5}\right] = \delta\left(2 - \frac{5}{3} - \frac{1}{5}\right) = \delta\left[\frac{30}{15} - \frac{25+3}{15}\right] = \delta\left[\frac{2}{15}\right]$$

$$\boxed{\theta = \frac{2\delta}{15}}$$

12.12 http://ingesolucionarios.blogspot.com Mass flow in and out of C.V. is

$$\dot{m} = \int_0^\delta \rho u b \, dy$$

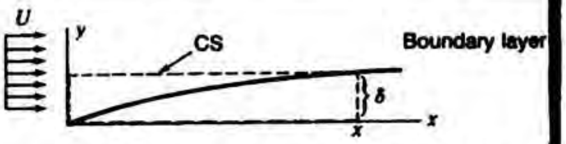


Using the momentum thickness $\theta$ show that for a flow over a flat plate of width $b$ that the drag $D(x)$ over length $x$ of the plate is

$$D(x) = \rho b U^2 \theta \qquad (a)$$

Noting that

$$D(x) = \int_0^x b\tau_w \, dx \qquad (b)$$

differentiate $(a)$ and $(b)$ with respect to $x$ and show that

$$\tau_w = \rho U^2 \frac{d\theta}{dx} \qquad (c)$$

*Hint*: Use the control volume shown with the mass flow in and out given as $\int_0^\delta \rho u b \, dy$. Thus we can see that the momentum thickness $\theta$ is a measure of drag on a plate and the gradient of $\theta$ is a measure of shear stress at the wall.

The **linear momentum** equation for the control volume is then

$$F(x) = -U \int_0^\delta \rho\, u\, b\, dy + \int_0^\delta \rho\, u^2\, b\, dy = b\,\rho \left[ \int_0^\delta (u^2 - uU)\, dy \right]$$

Hence

$$D(x) = b\,\rho \int_0^\delta (uU - u^2)\, dy = \rho\, b \int_0^\delta u(U-u)\, dy$$

But

$$\theta = \int_0^\delta \frac{u}{U}\left(1 - \frac{u}{U}\right) dy$$

Hence

$$\boxed{D(x) = \rho\, b\, U^2\, \theta} \qquad (1)$$

Also

$$D(x) = \int_0^x \tau_w\, b\, dx \qquad (2)$$

Differentiate (1) and (2).

$$\begin{cases} \dfrac{dD}{dx} = \rho\, b\, U^2 \dfrac{d\theta}{dx} \\ \dfrac{dD}{dx} = \tau_w\, b \end{cases}$$

Equate right sides.

$$\rho\, b\, U^2 \frac{d\theta}{dx} = b\, \tau_w$$

$$\therefore \quad \boxed{\tau_w = \rho\, U^2 \frac{d\theta}{dx}} \qquad (3)$$

http://ingesolucionarios.blogspot.com

12.13

Using Eq. (*c*) from Prob. 12.12 and a parabolic profile for velocity in the boundary layer [see Eq. (12.14)] as well as Newton's viscosity law for $\tau_w$, show that

$$\delta \, d\delta = 15 \frac{\nu}{U} dx$$

so that on integrating and letting $\delta = 0$ when $x = 0$ we get

$$\frac{\delta}{x} = \frac{5.48}{\sqrt{Re_x}} \qquad (a)$$

the same result reached in the text via the von Kármán integral momentum theorem.

**Note** from Eq. (c), Prob. 12.12

$$\tau_w = \rho U^2 \frac{d\theta}{dx} \qquad (1)$$

The defnition of $\theta$ next

$$\theta = \int_0^\delta \frac{u}{U}\left(1 - \frac{u}{U}\right) dy \qquad (2)$$

Finally, the the parabolic profile of Eq. (13.44)

$$u = 2U \frac{y}{\delta} - U\left(\frac{y}{\delta}\right)^2 \qquad (3)$$

Now use Netwon's viscosity law to get $\tau_w$

$$\tau_w = \mu \frac{\partial u}{\partial y}\Big|_{y=0} = \mu \frac{2U}{\delta} \qquad (4)$$

Go to Eq. (1) and substitute (4), (2) and (3).

$$\frac{2U\mu}{\delta} = \rho U^2 \frac{d}{dx}\left\{\int_0^\delta \left[2\left(\frac{y}{\delta}\right) - \left(\frac{y}{\delta}\right)^2\right]\left[1 - 2\left(\frac{y}{\delta}\right) + \left(\frac{y}{\delta}\right)^2\right] dy\right\}$$

$$\frac{2U\mu}{\delta} = \rho U^2 \frac{d}{dx}\int_0^\delta \left[2\left(\frac{y}{\delta}\right) - 4\left(\frac{y}{\delta}\right)^2 + 2\left(\frac{y}{\delta}\right)^3 - \left(\frac{y}{\delta}\right)^2 + 2\left(\frac{y}{\delta}\right)^3 - \left(\frac{y}{\delta}\right)^4\right] dy$$

**(cont.)**

$$\frac{2U\mu}{\delta}\ \rho\ U^2 \frac{d}{dx}\int_0^\delta \left[2\left(\frac{y}{\delta}\right) - 5\left(\frac{y}{\delta}\right)^2 + 4\left(\frac{y}{\delta}\right)^3 - \left(\frac{y}{\delta}\right)^4\right] dy$$

$$\frac{2U\mu}{\delta} = \rho\ U^2 \frac{d}{dx}\left[\frac{2\delta^2}{2\delta} - 5\,\frac{\delta^3}{3\delta^2} + 4\,\frac{\delta^4}{4\delta^3} - \frac{\delta^5}{5\delta^4}\right]$$

$$\frac{2U\mu}{\delta} = \rho\ U^2 \frac{d}{dx}\left[\delta - \frac{5}{3}\,\delta + \delta - \frac{1}{5}\,\delta\right]$$

$$\frac{2U\mu}{\delta} = \rho\ U^2 \frac{d\delta}{dx}\left(\frac{2}{15}\right)$$

$$\delta d\delta = \frac{\nu}{U}\,dx\,(15)$$

$$\frac{\delta^2}{2} = \frac{\nu}{U}\,x\,(15) + C_1$$

$$\frac{\delta}{x} = \frac{1}{\left(\frac{Ux}{\nu}\right)^{1/2}}\,[30]^{\frac{1}{2}}$$

$$\boxed{\frac{\delta}{x} = 5.48\,\frac{1}{(Re_x)^{1/2}}}$$

12.14

Using Eq. 12.13 show that we get the following formula for $\tau_w$ for a laminar boundary layer:

$$\tau_w = 0.332\frac{\rho^{1/2}\mu^{1/2}U^{1.5}}{x^{1/2}}$$

Now get the drag $D(x)$ for one surface of the plate of width $b$, and from this calculate $C_f$. Note that

$$C_f = 2c_f(L)$$

That is, the plate friction coefficient $C_f$ equals twice the skin-friction coefficient $c_f$ taken at the end of the plate.

$$c_f\ \frac{.664}{\dfrac{\rho^{\frac{1}{2}}U^{\frac{1}{2}}x^{\frac{1}{2}}}{\mu^{\frac{1}{2}}}} = \frac{\tau_w}{\frac{1}{2}\rho U^2}$$

$$\therefore\quad \tau_w = \frac{.332\rho^{\frac{1}{2}}\mu^{\frac{1}{2}}U^{1.5}}{x^{\frac{1}{2}}}$$

Now compute $D(x)$

$$D(x) = \int_0^x \tau_w\, b\, dx = \int_0^x \frac{.332\rho^{\frac{1}{2}}\mu^{\frac{1}{2}}U^{1.5}}{x^{\frac{1}{2}}}\, b\, dx = .664(\rho^{\frac{1}{2}})(\mu^{\frac{1}{2}})(U^{1.5})(x^{\frac{1}{2}})(b)$$

$$C_f = \frac{D(L)}{\frac{1}{2}\rho U^2 bL} = \frac{.664\,\rho^{\frac{1}{2}}\mu^{\frac{1}{2}}U^{1.5}L^{\frac{1}{2}}b}{\frac{1}{2}\rho U^2 bL} = \frac{1.328\mu^{\frac{1}{2}}}{\rho^{\frac{1}{2}}U^{\frac{1}{2}}L^{\frac{1}{2}}} = \frac{1.328}{(Re_L)^{\frac{1}{2}}}$$

$$\therefore\quad \boxed{c_f = 2c_f(L)}$$

http://ingesolucionarios.blogspot.com

12.15

Air at 5°C and atmospheric pressure is flowing into the region between two horizontal parallel plates. How close to each other must the plates be if when transition in the boundary layer is about to take place the flow is entirely viscous laminar flow over the entire height between the plates? Transition takes place at $Re_x = 10^6$. The speed of air $U$ is 20 m/s. Assume zero pressure gradient outside the boundary layer.

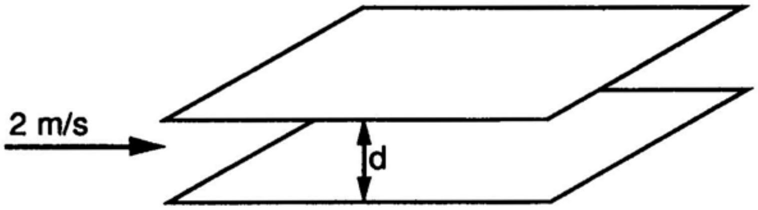


$$Re_{cr} = 10^6$$

$$\frac{\frac{d}{2}}{x} = 4.96 \frac{1}{\sqrt{10^6}}$$

$$\frac{d}{x} = \frac{(2)(4.96)}{\sqrt{10^6}}$$

$$d = .00992x \qquad (1)$$

$$\frac{Ux}{\nu} = 10^6$$

$$x = \frac{\nu}{U} 10^6 = \frac{1.5\times10^{-5}}{20}(10^6) = .750 \quad m$$

$$d = (.00992)(.750) = .00744 \ m = \boxed{7.44 \ mm}$$

 http://ingesolucionarios.blogspot.com

**Water at 20°C enters a pipe as initially frictionless irrotational flow. A boundary layer immediately forms on the inside periphery of the pipe. The inside diameter of the pipe is 20 mm and transition in the boundary layer takes place at $Re_x = 10^6$. Using a flat-plate model, find the distance $x_0$ from the entrance of the pipe to where there is a laminar flow over the entire cross section of the pipe and where also transition is just beginning to occur. What speed should the flow have on entering the pipe for this to be possible?**

Make believe that the interior of the pipe is unrolled to be a flat plate with flow over the plate at zero pressure gradient. Let $\delta = \left(\frac{1}{2}\right)(.020)$ at $Re_x = 10^6$ . We can say for laminar flow in the boundary layer that at transition:

$$\frac{\delta}{x_0} = \frac{4.64}{\sqrt{Re_x}} = \frac{4.64}{\sqrt{10^6}} \qquad (1)$$

$$\frac{\left(\frac{1}{2}\right)(.020)}{x_0} = \frac{4.64}{\sqrt{10^6}}$$

$$x_0 = 2.16 \quad m$$

Also, we have

$$Re_x = 10^6$$

$$\frac{(U)(2.16)}{1.007\times10^{-6}} = 10^6 \qquad (2)$$

$$U = .467$$

$$\begin{cases} x_0 = 2.155 \quad m \\ U = .467 \quad m/s \end{cases}$$

Keep in mind we are requiring fully developed flow and transition to occur simultaneously. Hence this result is not to be compared with that of Langhaar [Eq. (9.11)].

http://ingesolucionarios.blogspot.com 

12.17

Air at a temperature of 20°C and pressure of 150 kPa absolute enters a smooth circular duct of diameter 0.5 m. If at the entrance to the duct the profile is that of a one-dimensional flow of velocity 0.3 m/s with zero boundary-layer thickness, compute the boundary-layer thickness and the displacement thickness at 0.1 m from the entrance. What is the velocity here of the flow outside the boundary layer assuming a uniform profile outside and using a cubic velocity profile inside the boundary layer? Take $Re_{cr} = 10^5$. Next, compute this uniform velocity using the displacement thickness. Compare results.

At $x = .1\,m$ using flat plate theory

$$p\upsilon = RT$$

$$\rho = \frac{1}{\upsilon} = \frac{p}{RT} = \frac{150{,}000}{(287)(293)} = 1.784 \quad \frac{kg}{m^3}$$

$$Re_x = \frac{(1.784)(.3)(.1)}{(4\times10^{-7})(47.9)} = 2.793\times10^3$$

$\therefore$ Laminar boundary layer. Hence:

$$\frac{\delta}{x} = 4.96\ Re^{-\frac{1}{2}}$$

$$\delta = (4.96)(2.793\times10^3)^{-\frac{1}{2}}(.1) = \boxed{.009385\ m}$$

$$\delta^* = (1.73)(2.793\times10^3)^{-\frac{1}{2}}(.1) = \boxed{.003273\ m}$$

Now look at a cubic boundary layer velocity profile.

$$u = \frac{3}{2}U\left(\frac{y}{\delta}\right) - \frac{U}{2}\left(\frac{y}{\delta}\right)^3$$

The boundary layer flow $q_{BL}$ is next computed.

$$q_{BL} = \int_0^{.009385}\left[\left(\frac{3}{2}\right)(.3)\left(\frac{y}{.009385}\right) - \frac{.3}{2}\left(\frac{y}{.009385}\right)^3\right]\pi(.5-2y)\,dy$$

http://ingesolucionarios.blogspot.com

**(cont.)**

$$= \int_0^{.009385} (47.95\,y - 1.8146\times10^5\,y^3)\pi(.5-2y)\,dy$$

$$= \pi \int_0^{.009385} (23.975\,y - 95.20\,y^2 - 9.070\times10^4\,y^3 + 3.6292\times10^5\,y^4)\,dy$$

$$= \pi\left[\frac{23.975}{2}(.009385)^2 - \frac{95.90}{3}(.009385)^3 - \frac{9.070\times10^4}{4}(.009385)^4\right.$$

$$\left. + \frac{3.6292\times10^5}{5}(.009385)^5\right]$$

$$= \pi[.0010558 - 2.642\times10^{-5} - 1.7591\times10^{-4} + 5.2846\times10^{-6}] = 2.698\times10^{-3}$$

$$q_{core} = (.3)\left(\frac{\pi}{4}\right)(.5)^2 - 2.698\times10^{-3} = .05621\ \frac{m^3}{s}$$

$$\therefore\quad V_{core} = \frac{.05621}{\left(\frac{\pi}{4}\right)[.5-(2)(.009385)]^2} = \boxed{.30904\ m/s}$$

Now use $\delta^*$ to get $V_{core}$ again.

$$V_{core}\left(\frac{\pi}{4}\right)[.5 - (2)(.003273)]^2 = (.3)\left(\frac{\pi}{4}\right)(.5)^2$$

$$V_{core} = \boxed{.3080\ m/s}$$

Do Prob. 12.17 for $x = 1$ m and $U = 5$ m/s.

At $x = 1$

$$\rho = \frac{1}{\upsilon} = \frac{p}{RT} = \frac{150{,}000}{(287)(293)} = 1.784\ \frac{kg}{m^3}$$

$$Re_x = \frac{(1.784)(5)(1)}{(4\times10^{-7})(47.9)} = 4.656\times10^5$$

Hence we have a turbulent boundary layer.

$$\delta = (.37)[(4.656\times10^5)^{-\frac{1}{5}}](1) = .02720\ m$$

$$\delta^* = (.0463)[(4.656\times10^5)^{-\frac{1}{5}}](1) = .003404\ m$$

Volume of flow through boundary layer using velocity field for low $Re$ turbulent flow.

$$q_{BL} = \int_0^{\delta}\left[U\left(\frac{y}{\delta}\right)^{\frac{1}{7}}\right](\pi)(D-2y)\,dy = \int_0^{.0272}(5)\left[\frac{y^{\frac{1}{7}}}{(.0272)^{\frac{1}{7}}}\right]\pi(.5-2y)\,dy$$

$$= 26.29\int_0^{.0272}[.5y^{\frac{1}{7}} - 2y^{\frac{8}{7}}]\,dy = 26.29\left[.5\,\frac{(.0272)^{\frac{8}{7}}}{\frac{8}{7}} - 2\,\frac{(.0272)^{\frac{15}{7}}}{\frac{15}{7}}\right]$$

$$q_{BL} = 26.29\,[7.111\times10^{-3} - 4.126\times10^{-4}] = .17610\ \frac{m^3}{s}$$

$$q_{core} = 5\left(\frac{\pi}{4}\right)[.5^2] - .17610 = .80565$$

$$V_{core} = \frac{.80565}{\left(\frac{\pi}{4}\right)[.5 - (2)(.02720)]^2} = \boxed{5.16614\ \frac{m}{s}}$$

Now use $\delta^*$ for same calculation.

$$V_{core}\left(\frac{\pi}{4}\right)[.5 - (.003404)(2)]^2 = (5)\left(\frac{\pi}{4}\right)(.5)^2 = \boxed{5.139\ \frac{m}{s}}$$

 http://ingesolucionarios.blogspot.com

Consider for incompressible flow that the free-stream pressure outside the boundary layer is a function of $x$, i.e., $p(x)$. Replace $dp/dx$ in Eq. (12.40) using Bernoulli's equation outside the boundary layer and reach the following form of the von Kármán momentum equation with $u_m$ as free stream velocity:

$$\tau_w = \rho \frac{d}{dx} \int_0^\delta (u_m - u) u \, dy + \rho \left( \frac{du_m}{dx} \right) \int_0^\delta (u_m - u) \, dy$$

*Hint*: Use the relation

$$u_m \left[ \frac{d}{dx} \int_0^\delta \rho u \, dy \right] = \frac{d}{dx} \left[ u_m \int_0^\delta \rho u \, dy \right] - \left( \frac{du_m}{dx} \right) \int_0^\delta \rho u \, dy$$

We start with Eq. (13.40) with $u_m = u_m(x)$

$$-\delta \frac{dp}{dx} - \tau_w = \frac{d}{dx}\left( \int_0^\delta \rho u^2 \, dy \right) - u_m \frac{d}{dx}\left( \int_0^\delta \rho u \, dy \right) \qquad (1)$$

Write **Bernoulli** outside boundary layer.

$$\frac{u_m^2}{2} + \frac{p}{\rho} = const.$$

Take $\frac{d}{dx}$ of this equation.

$$u_m \frac{du_m}{dx} + \frac{1}{\rho} \frac{dp}{dx} = 0$$

$$\therefore \quad \frac{dp}{dx} = -\rho u_m \frac{du_m}{dx}$$

Note that

$$\delta \frac{dp}{dx} = -\rho\,(\delta)(u_m) \frac{du_m}{dx}$$

But $(\delta)(u_m) = \int_0^\delta u_m \, dy$

http://ingesolucionarios.blogspot.com

**(cont.)**

$$\therefore \quad \delta \frac{dp}{dx} = -\rho \frac{du_m}{dx} \int_0^\delta u_m \, dy$$

Subst. into Eq. (1).

$$\rho \frac{du_m}{dx} \int_0^\delta u_m \, dy - \tau_w = \frac{d}{dx}\left(\int_0^\delta \rho u^2 \, dy\right) - u_m \frac{d}{dx}\left(\int_0^\delta \rho u \, dy\right) \qquad (2)$$

Look at last term:

$$u_m \frac{d}{dx} \int_0^\delta \rho u \, dy = \frac{d}{dx}\left\{u_m \int_0^\delta \rho u \, dy\right\} - \left(\frac{du_m}{dx}\right) \int_0^\delta \rho u \, dy$$

$$= \frac{d}{dx}\left\{\int_0^\delta \rho u \, u_m \, dy\right\} - \left(\frac{du_m}{dx}\right) \int_0^\delta \rho u \, dy \qquad (3)$$

Subst. into (2)

$$\boxed{\tau_w = \frac{d}{dx} \int_0^\delta \rho (u_m - u) u \, dy + \rho \left(\frac{du_m}{dx}\right) \int_0^\delta (u_m - u) \, dy}$$

 http://ingesolucionarios.blogspot.com

Suppose the free-stream velocity outside the boundary layer for a flat plate is known to have the form

$$u_m = C_1 + C_2 x$$

Using the form of the von Kármán momentum equation given in Prob. 12.19, formulate the differential equation for the boundary layer thickness equation. Get the following result using the approximate velocity profile given by Eq. (12.44):

$$\left[(C_1 + C_2 x)\frac{2u_m}{3} - \frac{8u_m^2}{15}\right]\frac{d\delta}{dx} + C_2(C_1 + C_2 x)\delta - \frac{2u_m \nu}{\delta} = 0$$

From Prob. 12.19

$$\tau_w = \rho \frac{d}{dx}\int_0^\delta (u_m - u)u\,dy + \rho \frac{du_m}{dx}\int_0^\delta (u_m - u)\,dy$$

Substitute $u_m = C_1 + C_2 x$ . We get

$$\tau_w = \rho \frac{d}{dx}\int_0^\delta (C_1 + C_2 x - u)u\,dy + \rho C_2 \int_0^\delta (C_1 + C_2 x - u)\,dy$$

Use **Newton's viscosity law** for $\tau_w$ . Let $\frac{\mu}{\rho} = \nu$

$$\nu\left(\frac{du}{dy}\right)_{y=0} = \frac{d}{dx}\left[(C_1 + C_2 x)\int_0^\delta u\,dy\right] - \frac{d}{dx}\int_0^\delta u^2\,dy + C_2(C_1 + C_2 x)\delta - C_2\int_0^\delta u\,dy$$

$$\nu\left(\frac{du}{dy}\right)_{y=0} = C_2\int_0^\delta u\,dy + (C_1 + C_2 x)\frac{d}{dx}\int_0^\delta u\,dy - \frac{d}{dx}\int_0^\delta u^2\,dy + C_2(C_1 + C_2 x)\delta - C_2\int_0^\delta u\,dy$$

$$\nu\left(\frac{du}{dy}\right)_{y=0} = (C_1 + C_2 x)\frac{d}{dx}\int_0^\delta u\,dy - \frac{d}{dx}\int_0^\delta u^2\,dy + C_2(C_1 + C_2 x)\delta$$

Let $u = 2u_m\left(\frac{y}{\delta}\right) - u_m\left(\frac{y}{\delta}\right)^2$

http://ingesolucionarios.blogspot.com 

http://ingesolucionarios.blogspot.com

**(cont.)**

$$\nu\left(\frac{2u_m}{\delta}\right) = (C_1+C_2x)\frac{d}{dx}\left\{\int_0^\delta\left[2u_m\left(\frac{y}{\delta}\right) - u_m\left(\frac{y}{\delta}\right)^2\right]dy\right\}$$

$$- \frac{d}{dx}\left\{\left(\int_0^\delta 2u_m\left(\frac{y}{\delta}\right) - u_m\left(\frac{y}{\delta}\right)^2\right]^2 dy\right\} + C_2(C_1+C_2x)\delta$$

$$\frac{2u_m\upsilon}{\delta} = (C_1+C_2x)\frac{d}{dx}\left[\frac{2u_m}{\delta}\frac{\delta^2}{2} - \frac{u_m}{\delta^2}\frac{\delta^3}{3}\right] - \frac{d}{dx}\left[\frac{4u_m^2}{\delta^2}\frac{\delta^3}{3} - 4\frac{u_m^2}{\delta^3}\frac{\delta^4}{4} + \frac{u_m^2}{\delta^4}\frac{\delta^5}{5}\right] + C_2(C_1+C_2x)\delta$$

$$\frac{2u_m\nu}{\delta} = (C_1+C_2x)\ \frac{d}{dx}\left[\delta(u_m - \frac{1}{3}u_m)\right] - \frac{d}{dx}\left[\delta\left(\frac{4}{3}\right)u_m^2 - u_m^2 + \frac{1}{5}u_m^2\right] + C_2(C_1+C_2x)\delta$$

$$\frac{2u_m\nu}{\delta} = (C_1+C_2x)\left(\frac{d\delta}{dx}\right)\left(\frac{2u_m}{3}\right) - \left(\frac{d\delta}{dx}\right)\left(\frac{8u_m^2}{15}\right) + C_2(C_1+C_2x)\delta$$

$$\frac{2u_m\nu}{\delta} = \left[(C_1+C_2x)\ \frac{2u_m}{3} - \frac{8u_m^2}{15}\right]\frac{d\delta}{dx} + C_2(C_1+C_2x)\delta$$

$$\frac{2u_m\dfrac{\nu}{\delta} - C_2(C_1+C_2x)\delta}{d\delta} = \frac{(C_1+C_2x)\ \dfrac{2u_m}{3} - \dfrac{8u_m^2}{15}}{dx}$$

$$\left[(C_1+C_2x)\frac{2u_m}{3} - \frac{8u_m^2}{15}\right]\frac{d\delta}{dx} + C_2(C_1+C_2x)\delta - \frac{2u_m\nu}{\delta} = 0$$

http://ingesolucionarios.blogspot.com

12.21 Set $Re_L = 500{,}000$ $\therefore$ $\dfrac{(3)(L)}{1.007\times10^{-6}} = 500{,}000$ $L = .1678\ m$

Water at 20°C moves over one side of a flat plate. The free-stream speed is 3 m/s. The plate is 0.5 m wide. What maximum length should the plate be to have only a laminar boundary layer if the transition takes place at $Re_x = 500{,}000$? For this length, what is the plate drag coefficient $C_f$ and the drag $D$? At what position is the local coefficient of skin drag 1.5 that of the plate coefficient?

$$C_f = \frac{1.328}{\sqrt{500{,}000}} = 1.878\times10^{-3}$$

$$D = C_f\left(\frac{1}{2}\rho U^2\right)(A) = (1.878\times10^{-3})\left(\frac{1}{2}\right)(998.2)(3^2)(.5)(.1678) = .708\ N$$

$$c_f = (1.5)(1.878\times10^{-3})$$

$$\frac{.664}{\left(\frac{Ux}{\nu}\right)^{\frac{1}{2}}} = (1.5)(1.878\times10^{-3})$$

$$x = \frac{(1.007\times10^{-6})(.664)^2}{(3)[(1.5)(1.878\times10^{-3})]^2}$$

$$\boxed{x = .01865\ m = 18.65\ mm}$$

12.22

Show that for a cubic profile, the local coefficient of skin drag is $c_f = 0.647/\sqrt{Re_x}$.

$$c_f = \left[\frac{\tau_w}{\frac{1}{2}\rho U^2}\right] = \frac{\mu\left(\frac{\partial u}{\partial y}\right)_{y=0}}{\frac{1}{2}\rho U^2}$$

$$\left(\frac{\partial u}{\partial y}\right)_0 = \left\{\frac{\partial}{\partial y}\left[\frac{3}{2}U\frac{y}{\delta} - \frac{U}{2}\left(\frac{y}{\delta}\right)^3\right]\right\}_0 = \frac{3}{2}\frac{U}{\delta}$$

$$c_f = \frac{\mu\frac{3}{2}\frac{U}{\delta}}{\frac{1}{2}\rho U^2} = \frac{(\mu)\left(\frac{3}{2}\right)\left[\frac{U_0}{4.64x\sqrt{\frac{\nu}{Ux}}}\right]}{\frac{1}{2}\rho U^2} = \nu\left(\frac{3}{4.64}\right)\frac{1}{U}\frac{1}{\frac{x^{\frac{1}{2}}\nu^{\frac{1}{2}}}{U^{\frac{1}{2}}}}$$

$$\boxed{c_f = \frac{.647}{\sqrt{Re_x}}}$$

http://ingesolucionarios.blogspot.com

12.23

Explain what you mean by a two-dimensional self-similar boundary-layer flow. Draw the second profile for a self-similar flow shown. Express both velocity profiles in a single equation. Verify that using the stream function $\psi$, as stated in Eq. (12.7), we automatically satisfy the continuity equation. Assume zero pressure gradient outside the boundary layer.

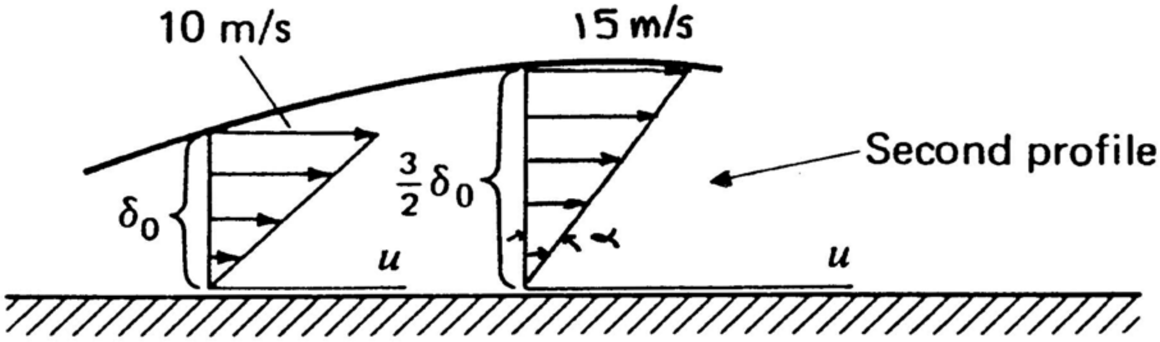


$$V = y \tan \alpha$$

$$u = y\left(\frac{10}{\delta}\right) = y\left(\frac{15}{\frac{3}{2}\delta}\right)$$

$$\therefore \quad \frac{u}{10} = \frac{y}{\delta}$$

Continuity equation in two dimensional incompressible flow is:

$$\frac{\partial u}{\partial x} + \frac{\partial v}{\partial y} = 0$$

$$\frac{\partial}{\partial x}\left(\frac{-\partial\psi}{\partial y}\right) + \frac{\partial}{\partial y}\left(\frac{\partial\psi}{\partial x}\right) = 0$$

$$-\frac{\partial^2\psi}{\partial x\,\partial y} + \frac{\partial^2\psi}{\partial y\,\partial x} = 0$$

$$0 = 0$$

**Q.E.D.**

http://ingesolucionarios.blogspot.com

12.24

The rectangular rudder on the author's Columbia 22 sailboat extends 2 ft into the water and is 10 in in width. When the boat is moving at 6 knots, what is the skin drag from the rudder? The water is at 60°F. Transition takes place at $Re_x = 8 \times 10^5$.

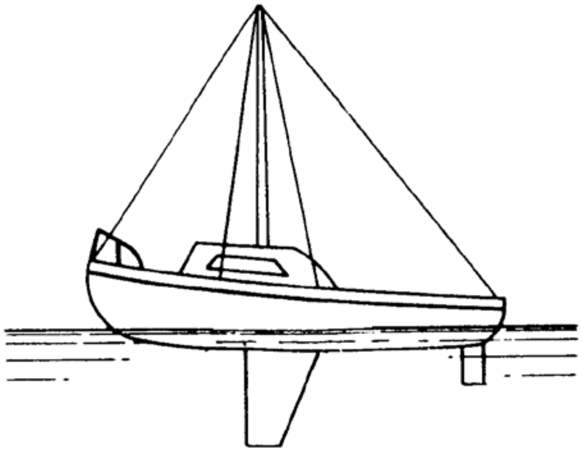

Check on assumption of laminar boundary layer.

$$Re_x = \left[\frac{(6)\left(\frac{6{,}080}{3{,}600}\right)\left(\frac{10}{12}\right)}{1.217\times10^{-5}}\right] = 6.94\times10^5$$

Hence the boundary layer is laminar over the entire rudder. Then:

$$C_f = \frac{1.328}{\sqrt{\left[6\left(\frac{6{,}080}{3{,}600}\right)\right]\left(\frac{10}{12}\right)/\,1.217\times10^{-5}}} = 1.594\times10^{-3}$$

$$D = 2C_f\left(\frac{1}{2}\rho U^2 A\right) = (2)(1.594\times10^{-3})\left(\frac{1}{2}\right)(1.938)\left[(6)\left(\frac{6{,}080}{3{,}600}\right)\right]^2(2)\left(\frac{10}{12}\right)$$

$$D = .529\ N$$



http://ingesolucionarios.blogspot.com Edu_Zegarr_ch

12.25

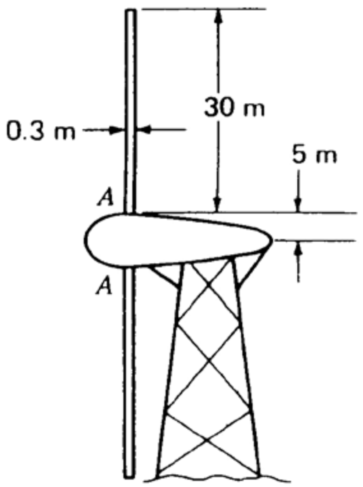


A large, two-bladed wind turbine for generating power is stationary and has feathered its blades in a storm so as to be essentially parallel to the wind, which has a speed $U$ of 50 km/h. What is the bending moment from skin drag at the base $A$ of each blade if we simplify the blade to be a plate of length 30 m and width 0.3 m, as shown

Consider transition to occur at $Re_x = 10^6$. The air is at 5°C.

First check to see if the boundary layer is laminar over the entire width of the plate. Look at end of plate.

$$Re = \frac{UL}{\nu} = \frac{(50)\left(\frac{1,000}{3,600}\right)(.3)}{1.5\times10^{-5}} = 2.78\times10^5$$

There is no transition. Boundary layer is laminar. The drag coefficient for one side of the blade surface is:

$$C_f = \frac{1.328}{\sqrt{Re_L}} = \frac{1.328}{\sqrt{2.78\times10^5}} = 2.52\times10^{-3}$$

$$\therefore \quad D = C_f\left(\frac{1}{2}\rho U^2\right)(A) = (2.52\times10^{-3})\left(\frac{1}{2}\right)(\rho)\left(50\,\frac{1,000}{3,600}\right)^2(30)(.3) \qquad (1)$$

We need $\rho$ for the air. Use Eq. of state.

$$p\,\frac{1}{\rho} = RT$$

$$\rho = \frac{p}{RT} = \frac{101,325}{(287)(273+5)} = 1.270 \quad kg/m^3$$

$$\therefore \quad D = 2.78 \quad N \qquad \textit{for one side}$$

This drag may be placed at center of blade.

$$M = (2D)(15) = (2)(2.78)(15) = \boxed{83.3 \ N\text{-}m}$$

http://ingesolucionarios.blogspot.com

12.26

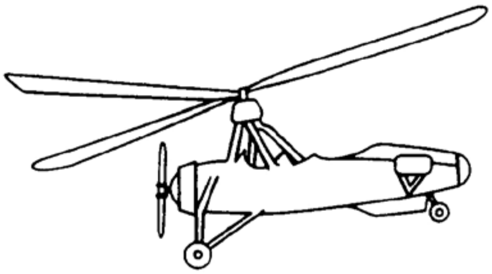

A helicopter during a test has its four main blades turning at 100 r/min with the blades oriented parallel to the plane of rotation. Each blade is 3.5 m long. The average width is 200 mm. The transition in the boundary layer is at a Reynolds number of $10^6$ and the air is at 20°C. What power is needed to maintain this rotation of the four blades? Consider only skin drag.

Do we have a laminar boundary layer?

$$\omega = (100)\left(\frac{2\pi}{60}\right) = 10.47 \quad rad/\text{sec}$$

$$(Re_L)_{\max} = \frac{(10.47)(3.5)(.200)}{1.7\times10^{-5}} = 4.31\times10^5$$

$\therefore$ We have a laminar boundary layer throughout. Use the local coefficient of skin friction. We can say for the torque of one blade:

$$TORQUE = 8\int_0^{3.5} \underbrace{\underbrace{(C_f)\left(\frac{1}{2}\rho U^2\right)\underbrace{(dr)(.2)}_{dA}}_{dF}(r)}_{dT}$$

$$TORQUE = 8\int_0^{3.5}(1.328)\left[\frac{(10.47)(r)(.2)}{1.7\times10^{-5}}\right]^{-\frac{1}{2}}\left(\frac{\rho}{2}\right)[(10.47)r]^2(dr)(.2)r$$

$$\rho = \frac{p}{RT} = \frac{101{,}325}{(287)(293)} = 1.205 \quad kg/m^3$$

$$\therefore \quad TORQUE = .400\int_0^{3.5} r^{\frac{5}{2}}dr = .400\, r^{\frac{7}{2}}\left(\frac{2}{7}\right)\Big|_0^{3.5} = 9.16 \quad N\text{-}m$$

$$POWER = (9.16)(10.47) = 95.9 \quad WATTS$$

$$\boxed{POWER = .096 \quad kW}$$



http://ingesolucionarios.blogspot.com Edu_Zegarr_ch

http://ingesolucionarios.blogspot.com

12.27

The large wind turbine of Prob. 13.25 (3-mW capacity) is not self-starting.[28] If the blades are feathered so as to be parallel to the plane of motion of the blades to minimize drag, at what speed $\omega_c$ does the turbine reach constant angular velocity? The torque is 800 N · m. Note that the wind normal to the blade surface has only small effect and is neglected. Transition occurs at $Re_{cr} = 10^6$.

We first assume that we have laminar boundary layer everywhere. The local skin friction coefficient at radial position $r$ and at $x$ is:

$$c_f = \frac{.664}{(Re_x)^{\frac{1}{2}}} = \frac{.664}{\left[\frac{(r\omega)(x)}{1.5\times10^{-5}}\right]^{\frac{1}{2}}}$$

$\therefore$ From Eq. (13.52)

$$\tau_w = c_f\left(\frac{1}{2}\rho U^2\right) = \left(\frac{.664}{\sqrt{\frac{(r\omega)(x)}{1.5\times10^{-5}}}}\right)\left(\frac{1}{2}\right)(\rho)(r\omega)^2 = 1.286\times10^{-3}\frac{\rho r^{\frac{3}{2}}\omega^{\frac{3}{2}}}{\sqrt{x}}$$

$$(TORQUE)_{friction} = 4\iint_A \tau_w r\,(dr\,dx) = 4\int_0^{.3}\int_5^{35}\tau_w r\,(dr\,dx)$$

$$= 4\int_0^{.3}\int_5^{35}(1.286\times10^{-3})\frac{\rho r^{\frac{3}{2}}\omega^{\frac{3}{2}}}{\sqrt{x}}\,r\,dr\,dx$$

Compute $\rho$ from eq. of state.

$$\rho = \frac{p}{RT} = \frac{101{,}325}{(287)(278)} = 1.270 \quad kg/m^3$$

$$\therefore \quad (TORQUE)_{friction} = 6.53\times10^{-3}\int_0^{.3}\int_5^{35} r^{\frac{5}{2}}x^{-\frac{1}{2}}\omega^{\frac{3}{2}}dr\,dx = 6.53\times10^{-3}\omega^{\frac{3}{2}}r^{\frac{7}{2}}\Big|_5^{35}\left(\frac{2}{7}\right)x^{\frac{1}{2}}\Big|_0^{.3}(2)$$

$$= \omega^{\frac{3}{2}}(6.53\times10^{-3})\left(35^{\frac{7}{2}}-5^{\frac{7}{2}}\right)\left(\frac{2}{7}\right)\left(.3^{\frac{1}{2}}\right)(2) = 518\omega^{\frac{3}{2}}$$

For constant speed operation:

$$800 = 518\omega_c^{\frac{3}{2}}$$



http://ingesolucionarios.blogspot.com Edu_Zegarr_ch

http://ingesolucionarios.blogspot.com

(cont.)

$$\omega_c = 1.336 \quad \frac{rad}{\sec} = \left(\frac{1.336}{2\pi}\right)(60) = 12.76 \quad RPM$$

Now check to see if we do have a laminar boundary layer. Check worst point at tip of blade.

$$(Re_x)_{\max} = \frac{(1.336)(35)(.3)}{1.5\times10^{-5}} = 9.35\times10^5$$

We are ok.

$$\boxed{\omega_{const.} = 12.76 \quad RPM}$$



http://ingesolucionarios.blogspot.com Edu_Zegarr_ch

12.28

$T = 60°F$

$p = 14.7 \quad psia$

$U = 50 \quad ft/sec.$

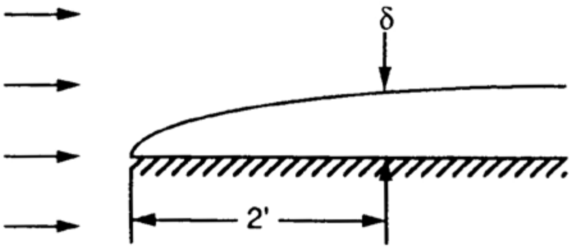


Air at 60°F and 14.7 lb/in² absolute moves over a flat plate at a speed of 50 ft/s. What is the boundary-layer thickness and the shear stress 2 ft from the front edge of the plate for a transition value of $3 \times 10^5$ for $Re_{cr}$?

a) $$Re = \frac{\rho U x}{\mu} = \frac{(50)(2)}{1.7\times10^{-4}} = 5.88\times10^5$$

Hence we have a turbulent boundary layer.

$$\delta = \frac{(2)(.370)}{[(5.88)(10^5)]^{\frac{1}{5}}} = .0519\ ft = .623\ in.$$

b) Using **Blasius'** formula we have:

$$\tau_w = .0225\rho U^2\left(\frac{\nu}{U\delta}\right)^{\frac{1}{4}} = (.0225)(\rho)(50^2)\left[\frac{1.7\times10^{-4}}{(50)(.0519)}\right]^{\frac{1}{4}}$$

Use **eq. of state** for air.

$$\rho = \frac{p}{RT} = \frac{(14.7)(144)}{(53.3)(32.2)(460+60)} = .00237\ slug\ /ft^3$$

$$\therefore \boxed{\tau_w = .01200 \quad psf}$$

http://ingesolucionarios.blogspot.com

12.29 Using Hansen data

Using the data of Hansen for transition, determine in Prob. 12.28 the position of transition and the ratio of the turbulent-boundary-layer thickness to the laminar-boundary-layer thickness at this position.

$$Re_{cr} = 3.2\times10^5$$

$$\therefore \quad 3.2\times10^5 = \left[\frac{(50)(x)}{1.7\times10^{-4}}\right]$$

$$x = 1.088 \quad ft$$

Hence transition occurs **1.088′** from the edge using the Hansen data.

For **laminar** flow:

$$\delta = \frac{(4.96)(1.088)}{[3.2\times10^5]^{1/2}} = .00954 \quad ft$$

For **turbulent** flow:

$$\delta = \frac{(.370)(1.088)}{[3.2\times10^5]^{1/5}} = .0319 \quad ft$$

Ratio of thickness $R$ is:

$$R = \frac{.0319}{.00954} = 3.34$$

12.30

One of the problems in controlling a large dirigible is that the boundary layer is quite thick by the time the airflow reaches the tail control surfaces. The slow flow detracts from the ability of the tail controls to develop large forces. To get a "ball-park" estimation, replace the side of the greatest of dirigibles, namely the ill-fated *von Hindenberg*, by a flat plate of length 300 m. If it is flying at 100 km/h, what is the thickness of the boundary layer at the end of the 300 m. The air is at a temperature of 10°C and at atmospheric pressure near the earth's surface.

$$\frac{\delta}{x} = .370\, Re^{-1/5}$$

$$\delta = (x)(.370)\left[\frac{1.55\times10^{-5}}{\frac{(100)(1,000)}{3,600}\,x}\right]^{\frac{1}{5}}$$

$$\delta = (300)(.370)\left[\frac{1.55\times10^{-5}}{\frac{(100)(1,000)}{3,600}\,300}\right]^{\frac{1}{5}}$$

$$\delta = 1.992 \quad m$$



http://ingesolucionarios.blogspot.com Edu_Zegarr_ch

http://ingesolucionarios.blogspot.com

12.31

Air at 60°F and 14.7 lb/in² absolute with zero pressure gradient moves over a flat 30-ft-long plate. The main stream has a 0.2 percent turbulence. What are the minimum and maximum distances from the front edge of the plate along which one can expect laminar flow in the boundary layer? $U = 100$ ft/s.

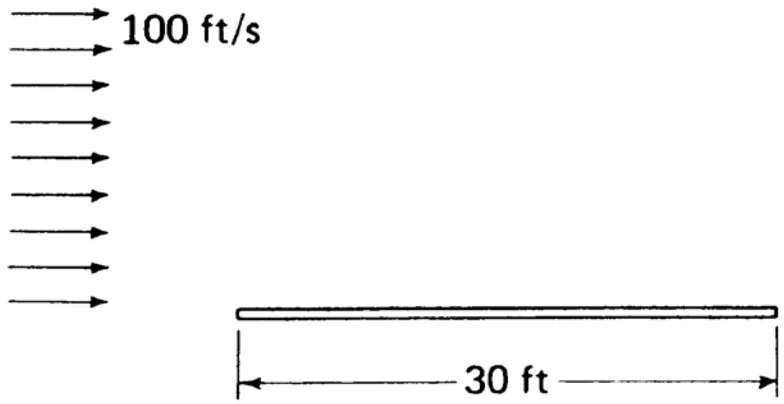


From Fig. 12.12 we see that the range of Reynolds numbers for laminar flow goes from

$$2.3\times10^{6} \quad to \quad 3.65\times10^{6}$$

For minimum $x$ ,

$$2.3\times10^{6} = \frac{100x}{1.7\times10^{-4}}$$

$$x_{\min} = 3.91 \quad ft$$

also, for maximum $x$ ,

$$3.65\times10^{6} = \frac{100x}{1.7\times10^{-4}}$$

$$x_{\max} = 6.205 \quad ft$$



http://ingesolucionarios.blogspot.com Edu_Zegarr_ch

http://ingesolucionarios.blogspot.com

In Prob. 12.31, determine the minimum and maximum possible drags on the top surface of the plate. Use the data of the cubic profile as determined in Prob. 12.7. The plate is 10 ft wide. The minimum total distance for a laminar boundary is 3.91 ft and the maximum total distance for a laminar boundary layer is 6.205 ft. Take $\rho = 0.00238$ slug/ft.

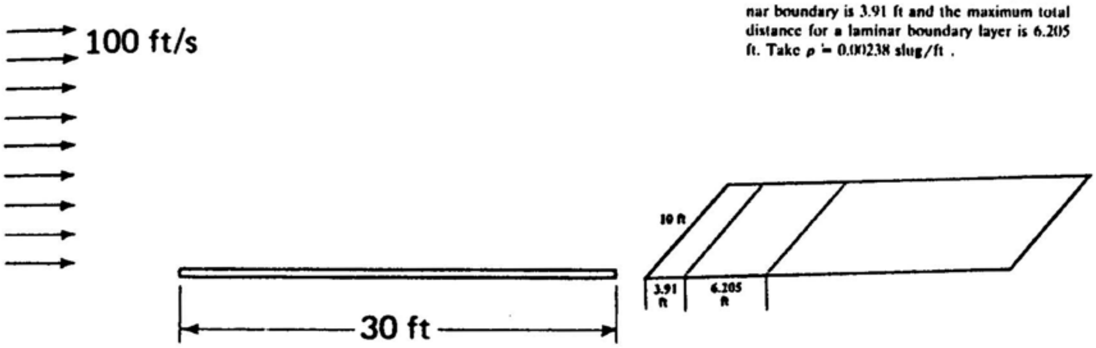


1. **Maximum drag**

a) From **laminar** flow region use the result for $\tau_w$ from Prob. 12.7 Thus:

$$\tau_w = (.323)(\rho)(U^2)\left(\frac{Ux}{\nu}\right)^{-\frac{1}{2}} = (.323)(.00238)(100)^2\left(\frac{100}{1.7\times10^{-4}}\right)^{-\frac{1}{2}}x^{-\frac{1}{2}} = .01002x^{-\frac{1}{2}}$$

$$\therefore \quad D_1 = \int_0^{3.91}(.01002x^{-\frac{1}{2}})(10\,dx) = \frac{(.1002)(x^{\frac{1}{2}})}{\left(\frac{1}{2}\right)}\Bigg|_0^{3.91} = .396 \quad lb$$

b) For **turbulent** region use Blasius formula for $\tau_w$.

$$\tau_w = (.0225)(.00238)(100^2)\left(\frac{1.7\times10^{-4}}{100\delta}\right)^{\frac{1}{4}}$$

But $\delta = .37\,Re^{-1/5}x = (.37)\left(\frac{100x}{1.7\times10^{-4}}\right)^{-\frac{1}{5}}x = (.37)\left(\frac{1}{14.1}\right)x^{\frac{4}{5}} = .0260x^{\frac{4}{5}}$

Substitute into $\tau_w$.

$$\tau_w = (.536)\left[\frac{1.7\times10^{-4}}{2.60x^{\frac{4}{5}}}\right]^{\frac{1}{4}} = .0482x^{-\frac{1}{5}}$$

Hence:

http://ingesolucionarios.blogspot.com
(cont.)

$$D_2 = \int_{3.91}^{30} (.0482)x^{-\frac{1}{5}} 10\,dx = (.482)\left(\frac{x^{\frac{4}{5}}}{\frac{4}{5}}\right)\Bigg|_{3.91}^{30} = (.603)(15.19 - 2.98) = 7.36\ lb$$

Total drag is then:

$$D_{max} = \boxed{7.76\ lb}$$

c) To determine the minimum drag, change limits in the preceding calculations for the later transition position.

$$D_1 = \frac{(.1002)(x^{\frac{1}{2}})}{\frac{1}{2}}\Bigg|_0^{6.205} = .499\ \ lb$$

$$D_2 = (.6025)(x^{.8})\Big|_{6.205}^{30} = 6.56\ \ lb$$

Total minimum drag is then

$$D_{min} = \boxed{7.06\ lb}$$


http://ingesolucionarios.blogspot.com Edu_Zegarr_ch

http://ingesolucionarios.blogspot.com

12.33

A smooth plate of dimensions 5 m long by 1.5 m wide is held in water at 20°C, which has a main-stream velocity of 1.5 m/s with zero pressure gradient. Using the data of Hansen, determine the drag on the upper surface of the plate. Do not use the Prandtl-Schlichting formula. *Hint*: Do you really have to consider the laminar part of the boundary layer in this case?

Transition will be assumed to occur at $Re_{cr} = 3.2\times10^5$

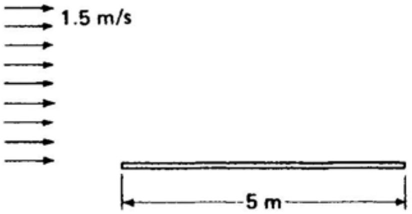


$$\therefore \quad 3.2\times10^5 = \left[\frac{(1.5)(x)}{1.005\times10^{-6}}\right]$$

$$x = .215 \quad m$$

Hence we can consider turbulent flow exists in the boundary layer for the entire flow.

$$\tau_w = (.0225)(\rho)(U^2)\left(\frac{\nu}{U\delta}\right)^{\frac{1}{4}} \qquad \text{(a)}$$

But

$$\delta = (x)(.37)\left(\frac{1.5x}{\nu}\right)^{-\frac{1}{5}} = (.37)\left(\frac{\nu}{1.5}\right)^{\frac{1}{5}}x^{\frac{4}{5}} \qquad \text{(b)}$$

Subst. into Eq. (a)

$$\tau_w = (.0225)(998.2)(1.5)^2\left\{\frac{\nu}{(1.5)(.37)\left(\frac{\nu}{1.5}\right)^{\frac{1}{5}}}\right\}^{\frac{1}{4}}x^{-\frac{1}{5}}$$

For $\nu = 1.007\times10^{-6}$ we get:

$$\tau_w = 3.77x^{-\frac{1}{5}}$$

$$D = \int_0^5 3.77x^{-\frac{1}{5}}(1.5)\,dx = \frac{(3.77)(1.5)x^{\frac{4}{5}}}{\frac{4}{5}}\Big|_0^5$$

$$\boxed{D = 25.6 \quad N}$$

http://ingesolucionarios.blogspot.com

12.34

Compute the ratio $\delta^*/x$ for turbulent flow using the one-seventh power velocity profile $Re_x^{-1/5}$. The result is $\delta^*/x = 0.0463$

$$\delta^* = \int_0^\infty \left(1 - \frac{u}{U}\right) dy$$

Let $u = U\left(\frac{y}{\delta}\right)^{1/7}$

$$\delta^* = \int_0^\delta \left[1 - \left(\frac{y}{\delta}\right)^{\frac{1}{7}}\right] dy = \left[y - \frac{1}{\delta^{\frac{1}{7}}} y^{\frac{8}{7}}\left(\frac{7}{8}\right)\right]\Big|_0^\delta = \left(\delta - \delta\,\frac{7}{8}\right) = \frac{1}{8}\,\delta$$

But $\delta = .37\,Re_x^{-1/5}\,x$ $\quad\therefore\quad \delta^* = \frac{1}{8}(.37)Re_x^{-1/5}\,x$

$$\frac{\delta^*}{x} = .0463[Re_x]^{-\frac{1}{5}}$$

12.35

A water tunnel has a square test-section cross section of 3 ft by 3 ft at the entrance. The test section of the tunnel is 8 ft long. The velocity profile is uniform at the entrance of the test section at a speed $U$ of 3 ft/s. To maintain this profile over a 3 ft by 3 ft region throughout the test section (with no model in place), we must continuously widen the test section as we move downstream of the entrance to minimize the effect of the boundary layer on this 3 ft × 3 ft stream. What should the exit dimension be of the test section? The water is at 60°F. Assume that boundary-layer thickness is zero at the entrance to the test section.

We must widen the end cross-section by $\delta^*$ there.

$$\delta^* = (x)(.0463)(Re_x)^{-\frac{1}{5}} = (8)(.0463)\left(\frac{(3)(8)}{1.217\times10^{-5}}\right)^{-\frac{1}{5}} = .0204 \quad ft$$

$\therefore$ End cross-section of test section is:

$$(3.0408)\,ft \times (3.0408)\,ft$$

12.36

Air is moving between two plates 3 in apart. If the velocity of the air approaching the plates is 20 ft/s and the plates are smooth, how far from the leading edges of the plates does viscous action completely exists over the entire height of the plate? The air is at 60°F. $Re_{cr} = 500{,}000$.

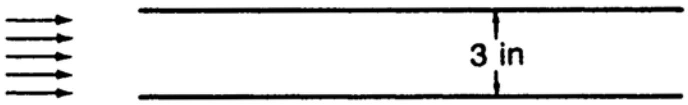


**Assume turbulent flow.**

$$\delta = 1.5\ in.$$

$$\frac{\delta}{x} = (0.37)(Re)^{-\frac{1}{5}}$$

$$\frac{1.5}{(12)(x)} = (0.37)\left(\frac{20x}{\nu}\right)^{-\frac{1}{5}}$$

$$\nu = 5.3\times10^{-6}\ ft^2/s$$

$$\therefore\quad \frac{1.5}{12x} = (0.37)\left(\frac{20}{5.3\times10^{-6}}\right)^{-\frac{1}{5}} x^{-\frac{1}{5}}$$

$$\left(\frac{(1.5)}{(.37)(12)}\right)\left(\frac{20}{5.3\times10^{-6}}\right)^{\frac{1}{5}} = x^{\frac{4}{5}}$$

$$\boxed{x = 11.35\ ft}$$

**Check *Re***

$$Re = \frac{(20)(11.35)}{5.3\times10^{-6}} = 4.28\times10^{7}$$

∴ Turbulent flow OK.

http://ingesolucionarios.blogspot.com

**A wind turbine is placed on a plateau. The wind approaching the plateau has a speed $U$ of 30 km/h on the average. Each blade of the turbine is 30 m in length. How high should you place the centerline of the turbine if you want the blades not to come within 3 m of the boundary layer? The distance $d$ is 1000 m and the temperature of the air is 10°C. Assume that the surface of the plateau is smooth as a result of clearing operations. Transition occurs at $Re_{cr} = 500{,}000$ in the boundary layer.**

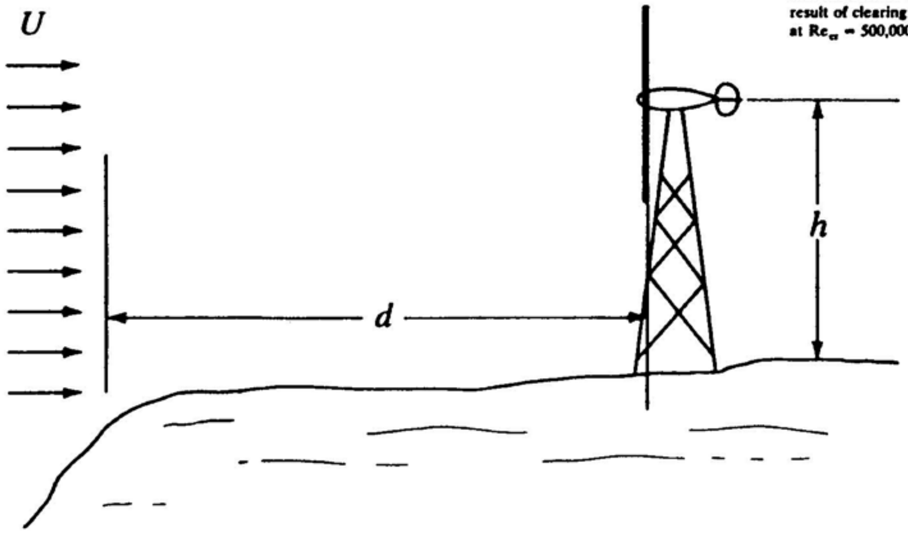


Assume turbulent B.L. at the wind turbine.

$$\frac{\delta}{x} = .37[Re_x]^{-\frac{1}{5}}$$

$$\delta = (1{,}000)(.37)\left[\frac{(30)\left(\frac{1{,}000}{3{,}600}\right)(1{,}000)}{1.55\times10^{-5}}\right]^{-\frac{1}{5}} = 6.64 \quad m$$

The above calculation is OK since

$$Re_x = 5.38\times10^8$$

$$h = 30 + 6.64 + 3 = \boxed{39.64 \ m}$$

http://ingesolucionarios.blogspot.com

A barge having dimensions of 30 m by 12 m moves at a speed of 1 m/s in fresh water at 15°C, as shown. Given an estimate of the skin friction drag $D$. Transition is at $Re_{cr} = 3 \times 10^5$.

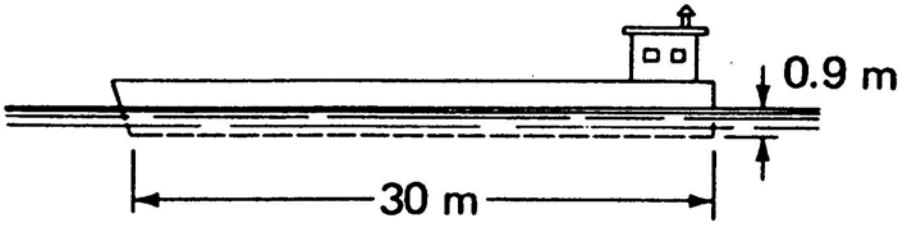


$$Re = \frac{(1)(30)}{1.141\times10^{-6}} = 2.629\times10^{7}$$

Use the **Prandtl-Schlichting** formula

$$C_f = \frac{.455}{[\log 2.629\times10^{7}]^{2.58}} - \frac{1{,}050}{2.629\times10^{7}} = 2.545\times10^{-3}$$

$$D = C_f\left(\frac{1}{2}\,\rho U^2\right)(A)$$

$$D = (2.545\times10^{-3})\left(\frac{1}{2}\right)(999.1)(1^2)(30)[12 + (2)(.9)]$$

$$\boxed{D = 526 \quad N}$$

http://ingesolucionarios.blogspot.com

12.39

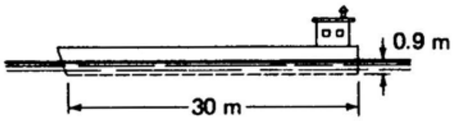


Do Prob. 12.38 for $U = 1.030$ m/s and a transition at $Re_{cr} = 3.2 \times 10^5$. Do not use the drag coefficient formulas but work from first principles with shear stress on the laminar and turbulent boundary layers.

As a first approximation, we imagine the lateral surfaces of the barge to be a single flat plate measuring 30 *m* in length and 13.8 *m* in width. The speed $U$ of the free stream over this surface is 1.030 *m*/sec . Using Hansen's critical value of $3.2\times10^5$ we have:

$$Re_{cr} = 3.2\times10^5 = \frac{(1.030)(x)}{1.141\times10^{-6}}$$

$$\therefore \quad x = .3546 \quad m \tag{1}$$

Thus, for virtually the entire region we have a turbulent boundary layer. Consequently for simplicity we shall consider turbulent flow over the entire plate and we can accordingly use Eq. (12.61) for the shear stress over the entire plate. Thus

$$\tau_w = .0225\,\rho U^2\left(\frac{\nu}{U\delta}\right)^{\frac{1}{4}} \tag{2}$$

For the boundary layer thickness $\delta$ we shall use Eq. (13.67)

$$\delta = .37\left(\frac{\nu}{U}\right)^{\frac{1}{5}}x^{\frac{4}{5}} \tag{3}$$

Substituting into Eq. (2), we have

$$\tau_w = .0225\,\rho U^2\left[\frac{\nu}{U(.37)\left(\frac{\nu}{U}\right)^{\frac{1}{5}}x^{\frac{4}{5}}}\right]^{\frac{1}{4}} = \frac{(.0225)(999.1)(1.030)^2(1.141\times10^{-6})^{\frac{1}{5}}}{(.37)^{\frac{1}{4}}\;(1.030)^{\frac{1}{5}}}x^{-\frac{1}{5}} = 1.969x^{-\frac{1}{5}} \tag{4}$$

The drag $D_f$ is now readily available.

$$D_f = \int_0^{30}\tau_w(13.8)\,dx = \int_0^{30}(1.969x^{-\frac{1}{5}})(13.8)dx = 27.18\int_0^{30}x^{-\frac{1}{5}}dx = 27.18\;\frac{x^{\frac{4}{5}}}{\frac{4}{5}}\Bigg|_0^{30} \tag{5}$$

$$\boxed{D_f = 516\ N}$$

http://ingesolucionarios.blogspot.com

12.40 We unroll the outer surface of the torpedo into a flat plate. Using the **Prandtl-Schlichting** skin drag formula we have:

A torpedo having a length of 4 m and an outer diameter of 0.49 m along most of its length is moving at a speed of 40 knots in seawater at 10°C. What power is needed to overcome the skin-friction drag? Transition occurs at a Reynolds number of $10^6$. Take $\nu$ to be $1.361 \times 10^{-6}$ m²/s and $\rho$ to be 1025 kg/m³. Neglect friction of appendages.

$$C_f = \frac{.455}{[\log Re_L]^{2.58}} - \frac{3{,}300}{Re_L} = \frac{.455}{\left[\log \frac{[(40)(.5144)][4]}{1.361\times10^{-6}}\right]^{2.58}} - \frac{3{,}300}{\frac{(40)(.5144)(4)}{1.361\times10^{-6}}} = .002230$$

$$D = C_f \frac{1}{2}\rho U^2(bL) = (.002230)\left(\frac{1}{2}\right)(1{,}025)[(40)(.5144)]^2(\pi)(.49)(4) = 2{,}981 \quad N$$

$$POWER = (2{,}981)(40)(.5144) = \boxed{61.3\ kW}$$

12.41

Ocean liners have in the past been equipped with retractable hydrofoils for purposes of maintaining stability in heavy weather. If the ship is moving at 40 knots, what is the skin-friction drag on the hydrofoil if each is 2 m long and 2 m wide? For the seawater which is at 10°C, the coefficient of viscosity $\mu$ is $1.395 \times 10^{-3}$ N·s/m² and the density $\rho$ is 1026 kg/m³. Transition takes place at $Re_{cr} = 10^6$. Compute the skin drag of the hydrofoils taking the turbulent boundary layer over the entire length. Then calculate skin drag, taking into account the laminar portion of the boundary layer.

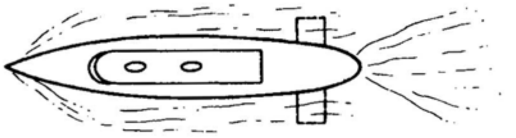

$$Re_L = \frac{[(40)(.5144)](2)(1{,}026)}{1.395\times10^{-3}} = 3.03\times10^7$$

We have a turbulent boundary layer flow over a significant portion of the boundary layer. First we get the drag assuming completely turbulent boundary layer. Using Eq. (13.78) we get:

$$C_f = \frac{.455}{(\log Re_L)^{2.58}} = \frac{.455}{[\log 3.03\times10^7]^{2.58}} = 2.53\times10^{-3}$$

$$D = 4\left\{C_f \frac{1}{2}\rho U^2(b)(L)\right\} = 4\left\{2.53\times10^{-3}\left(\frac{1}{2}\right)(1{,}026)[(40)(.5144)]^2(2)(2)\right\} = 8{,}793 \quad N$$

Now include the laminar boundary layer

$$C_f = \frac{.455}{[\log 3.03\times10^7]^{2.58}} - \frac{3{,}300}{3.03\times10^7} = 2.42\times10^{-3}$$

$$D = 4\left\{(2.42\times10^{-3})\left(\frac{1}{2}\right)(1{,}026)[(40)(.5144)]^2(2)(2)\right\}$$

$$\boxed{D = 8{,}414 \quad N}$$

http://ingesolucionarios.blogspot.com

**Do Prob. 12.41 for the case where the speed of the ship is 5 knots and the transition in the boundary layer is at $Re_{cr}$ = 500,000.**

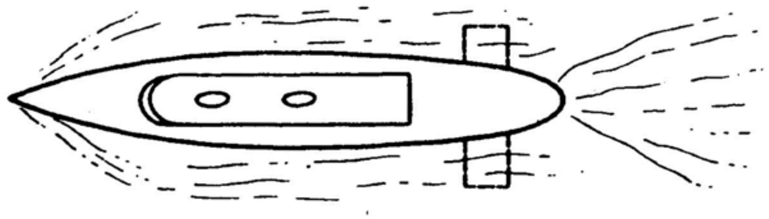

$$Re_L = \frac{(5)(.5144)(2)(1,026)}{1.395\times10^{-3}} = 3.78\times10^6$$

We use Eq.(12.75) for this case since $Re_L < 10^7$ .

$$\therefore \quad C_f = \frac{.074}{[Re_L]^{1/5}} = 3.58\times10^{-3}$$

$$D = 4(C_f)\left(\frac{1}{2}\,\rho U^2\right)(b)(L) = (4)(3.58\times10^{-3})\left(\frac{1}{2}\right)(1,026)[(5)(.5144)]^2(2)(2)$$

$$\boxed{D = 194.3\ N}$$

Now take the laminar boundary layer into account.

$$C_f = 3.58\times10^{-3} - \frac{1,700}{3.783\times10^6} = 3.13\times10^{-3}$$

$$D = (4)(3.13\times10^{-3}\left(\frac{1}{2}\right)(1,026)[(5)(.5144)]^2(2)(2) =$$

$$\boxed{170.0\ N}$$


http://ingesolucionarios.blogspot.com

Edu_Zegarr_ch

http://ingesolucionarios.blogspot.com

12.43 The chord length of the airfoil is:

A glider has a very large aspect ratio (40), which we see in Sec. 12.14 is the planform area of the airfoil divided by its chord length squared. If the entire planform area of the airfoil for a glider is 200 ft² and the chord length is a constant over the length of the airfoil, what is the skin-friction drag on the airfoil for a speed of the plane of 50 mi/h? The air temperature is 60°F. Transition takes place at $Re_{cr} = 10^6$.

$$40 = \frac{200}{C^2}$$

$$C = \sqrt{5} \quad ft$$

$$\therefore \quad Re_L = \frac{\left(50\,\frac{5{,}280}{3{,}600}\right)(\sqrt{5})}{1.7\times10^{-4}} = 9.646\times10^5$$

$$C_f = \frac{.455}{[\log 9.646\times10^5]^{2.58}} - \frac{3{,}300}{9.646\times10^5} = 1.080\times10^{-3}$$

$$D = 2\left\{(C_f)\left(\frac{1}{2}\,\rho U^2\right)(bL)\right\} = (1.080\times10^{-3})(\rho)\left[(50)\left(\frac{5{,}280}{3{,}600}\right)\right]^2(200)$$

Find $\rho$ .

$$\rho = \frac{p}{RT} = \frac{(14.7)(144)}{(53.3)(g)(520)} = 2.372\times10^{-3}$$

$$D = (1.080\times10^{-3})(2.372\times10^{-3})\left[50\left(\frac{5{,}280}{3{,}600}\right)\right]^2(200)$$

$$\boxed{D = 2.755 \quad lb}$$

A ground-effects vehicle is moving over water at a speed of 100 km/h. While over water, a pair of retractable rudders are inserted into the water. The width of the rudder is a constant equal to 0.75 m and a length of 1 m extends into the water. What is the skin drag on the rudders if transition occurs at $Re_{cr} = 5 \times 10^5$. The water is fresh water at a temperature of 15°C.

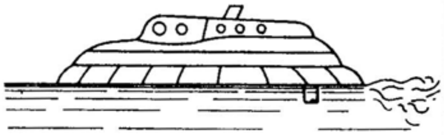

$$Re_L = \frac{(100)\left(\frac{1{,}000}{3{,}600}\right)(.75)}{1.141\times10^{-6}} = 1.826\times10^7$$

$$C_f = \frac{.455}{[\log 1.826\times10^7]^{2.58}} - \frac{1{,}700}{1.826\times10^7} = 2.639\times10^{-3}$$

$$D = 4\left\{(C_f)\left(\frac{1}{2}\,\rho U^2\right)(A)\right\} = 4\left\{(2.639\times10^{-3})\left(\frac{1}{2}\right)(999.1)\left(\frac{100}{3.6}\right)^2(.75)(1)\right\}$$

$$\boxed{D = 3{,}052 \quad N}$$

http://ingesolucionarios.blogspot.com

In Prob. 12.43 the rudder has a wetted area having the shape shown. Find the drag if the vehicle has a speed of 60 km/h. Other data are the same as in the previous problem.

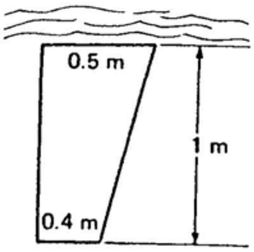


The largest plate Reynolds number is

$$Re_L = \frac{\left(60\,\frac{1{,}000}{3{,}600}\right)(.5)}{1.141\times10^{-6}} = 7.3\times10^{6}$$

We can use the **simple** Eq. (13.76) for the entire rudder.

$$\begin{cases} \ell = .5 - \epsilon \\ \dfrac{\epsilon}{z} = \dfrac{.1}{1} \\ \epsilon = .1z \\ \therefore\quad \ell = .5 - .1z \end{cases}$$

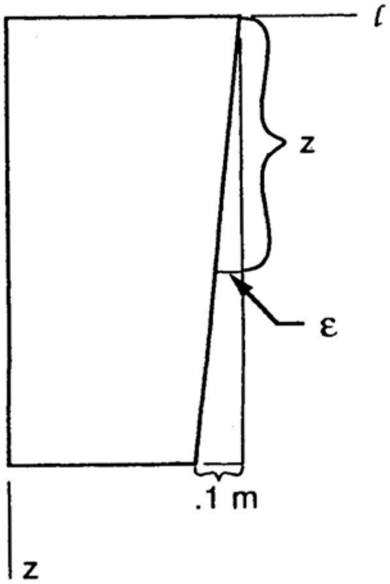


$$(C_f)_z = \frac{.074}{\left[\dfrac{\left(\dfrac{60}{3.6}\right)(\ell)}{1.141\times10^{-6}}\right]^{\frac{1}{5}}} - \frac{1{,}700}{\left[\dfrac{\left(\dfrac{60}{3.6}\right)(\ell)}{1.141\times10^{-6}}\right]}$$

$$(C_f)_z = 2.731\times10^{-3}\,\ell^{-\frac{1}{5}} - 1.164\times10^{-4}\ell^{-1}$$

$$D = 4\int_0^1 (2.731\times10^{-3}\,\ell^{-\frac{1}{5}} - 1.164\times10^{-4}\ell^{-1})\left(\frac{1}{2}\right)(999.1)\left(\frac{60}{3.6}\right)^2(\ell)\,dz$$

$$D = (5.55\times10^{5})\int_0^1 (2.731\times10^{-3}\,\ell^{\frac{4}{5}} - 1.164\times10^{-4})\,dz$$

(cont.)

$$\ell = (.5 - .1z)$$

$$\therefore \quad D = (5.55\times10^{5})\left\{2.73\times10^{-3}\int_{0}^{1}(.5-.1z)^{\frac{4}{5}}\,dz - (1.164\times10^{-4})(1)\right\}$$

Let $(.5 - .1z) = \eta$

$$\therefore \quad -.1dz = d\eta$$

$$dz = -10d\eta$$

$$D = 5.55\times10^{5}\left[2.73\times10^{-3}\int_{.5}^{.4}\eta^{\frac{4}{5}}(-10)\,d\eta - (1.164\times10^{-4})\right]$$

$$= 5.55\times10^{5}\left[-2.73\times10^{-2}\,\frac{\eta^{9/5}}{\left(\frac{9}{5}\right)}\Big|_{.5}^{.4} - (1.164\times10^{-4})\right]$$

$$\boxed{D = 735\ N}$$

http://ingesolucionarios.blogspot.com

12.45

In the autogyro, the lift is developed by freely rotating vanes. The rotation is caused by the aerodynamic forces on the vanes themselves. Using flat-plate theory, what is the aerodynamic torque needed to overcome skin friction for an angular speed of the vanes of 50 r/min? Take each vane to be a plate of dimension 4.5 m by 0.3 m. The air is at a temperature of 10°C. Transition takes place at $Re_{crit} = 3.2 \times 10^5$. Consider as an approximation Eq. (13.76) to be valid for $Re_L < 5 \times 10^5$ for turbulent boundary layer. Take $p = 101.404$ Pa.

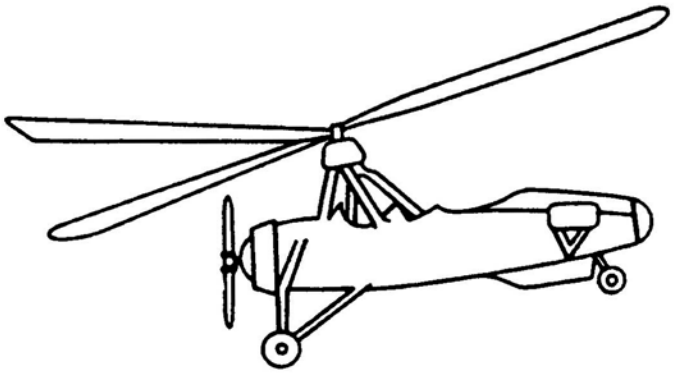

Find $(Re_L)_{max}$

$$\omega = 50\,\frac{2\pi}{60} = 5.24 \quad rad/\sec$$

$$(Re_L)_{max} = \frac{[(4.5)(5.24)](.3)}{1.55\times10^{-5}} = 4.56\times10^5$$

For part of blade we have laminar plus turbulent flow. Up to what radius $\overline{R}$ do we have only laminar flow? Set $Re = 3.2\times10^5$ .

$$3.2\times10^5 = \frac{(\overline{R})(5.24)(.3)}{1.55\times10^{-5}}$$

$$\overline{R} = 3.16 \quad m$$

For laminar region. Use strip $dR$ of vane at position $R$ .

$$(TORQUE)_1 = 6\int_0^{\overline{R}} \underbrace{\underbrace{(C_f)\left(\frac{1}{2}\right)(\rho U^2)\underbrace{(dR)(.3)}_{dA}}_{d(DRAG)}R}_{d(TORQUE)}$$

$$(TORQUE)_1 = 6\int_0^{3.16}(1.328)\left(\frac{(R)(5.24)(.3)}{1.55\times10^{-5}}\right)^{-\frac{1}{2}}\left(\frac{1}{2}\right)(\rho)[(R)(5.24)]^2(.3)(R)\,dR$$

(cont.)

$$\rho = \frac{p}{RT} = \frac{101{,}404}{(287)(283)} = 1.248 \quad kg/m^3$$

$$\therefore \quad (TORQUE)_1 = (.1286)\int_0^{3.16} R^{\frac{5}{2}} dR = (.1286)(3.16)^{\frac{7}{2}}\left(\frac{2}{7}\right) = 2.0 \quad N\text{-}m$$

For remainder of blades

$$(TORQUE)_2 = 6\int_{3.16}^{4.5} C_f\left(\frac{1}{2}\right)\rho U^2(.3)(dR)(R)$$

Use Eq. (12.76) for $C_f$

$$(TORQUE)_2 = 6\int_{3.16}^{4.5}\left\{(.074)\left[\frac{(R)(5.24)(.3)}{1.55\times 10^{-5}}\right]^{-\frac{1}{5}} - (1{,}050)\left[\frac{(R)(5.24)(.3)}{1.55\times 10^{-5}}\right]^{-1}\right\}$$

$$\times\left(\frac{1}{2}\right)(1.248)[R(5.24)]^2(.3)R\,dR$$

$$= .2276\int_{3.16}^{4.5} R^{\frac{14}{5}} dR - .3193\int_{3.16}^{4.5} R^2 dR$$

$$= \left[.2276R^{\frac{19}{5}}\,\frac{5}{19} - .3193\,\frac{R^3}{3}\right]\Bigg|_{3.16}^{4.5}$$

$$(TORQUE)_2 = 13.46 - 6.36 = 7.108 \quad N$$

$$\boxed{TOTAL\ TORQUE = 9.16 \quad N\text{-}m}$$

12.46

A barge having dimensions of 30 m by 12 m moves at a speed of 1 m/s in fresh water at 15°C. Estimate the skin-friction drag $D$. Transition is at $Re_{cr} = 3 \times 10^5$. Also give an equation with only $U$ as the unknown for the speed $U$ to double the skin-friction drag. Take $\nu = 1.141 \times 10^{-6}$ m²/s.

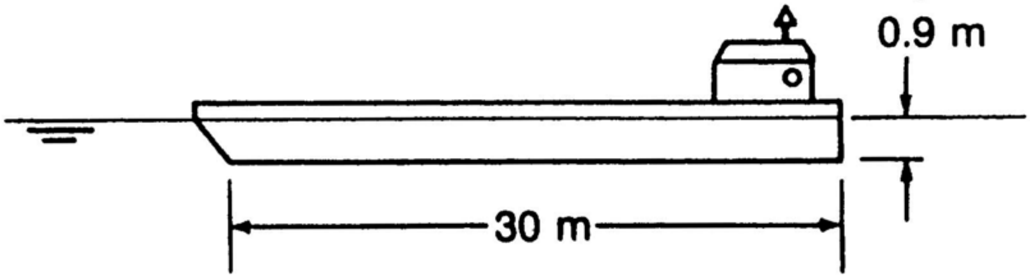


$$Re_L = \frac{(1)(30)}{1.141\times10^{-6}} = 2.629\times10^7 \qquad \textbf{turbulent flow}$$

Use **Prandtl-Schlichting** formula

$$C_f = \frac{.455}{[\log 2.629\times10^7]^{2.58}} - \frac{1,050}{2.629\times10^7} = 2.545\times10^{-3}$$

$$D = C_f \frac{1}{2}\rho V_0^2 A = (2.545\times10^{-3})\left(\frac{1}{2}\right)(999.1)(1)^2(30)[12 + (2)(.9)]$$

$$\boxed{D = 526\ N}$$

To double $D$ to 1,052 $N$ we have

$$1,052 = C_f \frac{1}{2}(999.1)(V^2)(30)[12 + (2)(.9)]$$

where

$$C_f = \frac{.455}{\left[\log\left(\frac{(V)(30)}{1.141\times10^{-6}}\right)\right]^{2.58}} + \frac{1,050}{\left[\frac{(V)(30)}{1.141\times10^{-6}}\right]}$$

Solve for $V$ by trial and error.

 http://ingesolucionarios.blogspot.com

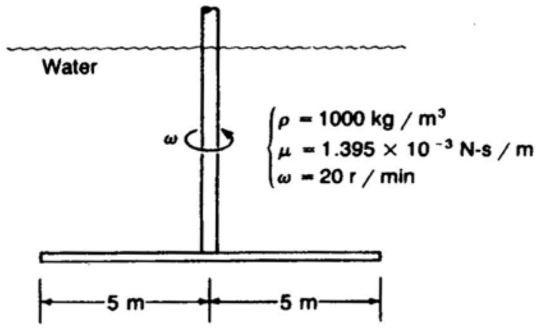


A mixing device with two blades is rotating with speed ω = 20 r/min with the blades in a horizontal orientation. What is the torque needed for *smooth* blades if $Re_{cr}$ = 320,000? The blades have a width of 0.3 m.
(*a*) Give torque from the purely laminar boundary-layer part of flow.
(*b*) Give torque from turbulent boundary-layer part of the flow.

Find $r_{max}$ for laminar flow.

$$3.2\times10^5 = \frac{(1{,}000)(20)\left(\frac{2\pi}{60}\right)(r_{max})(.3)}{1.395\times10^{-3}}$$

$$r_{max} = .7105\ m$$

a) For **laminar boundary** layer flow,

$$C_f = 1.328(Re_L)^{-\frac{1}{2}}$$

$$\therefore\quad T_{LAM} = 4\int_0^{.7105} (1.328)\left[\frac{(1{,}000)(20)\left(\frac{2\pi}{60}\right)(r)(.3)}{1.395\times10^{-3}}\right]^{-\frac{1}{2}}(r)\left(\frac{1}{2}\right)(1{,}000)\left[(r)(20)\left(\frac{2\pi}{60}\right)\right]^2(.3)\,dr$$

$$T_{LAM} = 5.208\int_0^{.7105} r^{\frac{5}{2}}\,dr = 5.208\left.\frac{r^{\frac{7}{2}}}{(7/2)}\right|_0^{.7105}$$

$$\boxed{T_{LAM} = .450\ N\text{-}m}$$

b) For **turbulent boundary layer**

$$(Re_L)_{max} = \frac{(1{,}000)(20)\left(\frac{2\pi}{60}\right)(5)(.3)}{1.395\times10^{-3}} = 2.252\times10^6$$

$$\therefore\quad Re_L < 10^7 \qquad \text{low } Re \text{ range}$$


http://ingesolucionarios.blogspot.com Edu_Zegarr_ch

http://ingesolucionarios.blogspot.com

**(cont.)**

$$T_{TURB} = 4\int_{.7105}^{5}\left\{(.074)\left[\frac{(1{,}000)(r)(20)\left(\frac{2\pi}{60}\right)(.3)}{1.395\times10^{-3}}\right]^{-\frac{1}{5}} - \frac{1{,}050}{(Re)_L}\right\}$$

$$\left(\frac{1}{2}\right)(1{,}000)\left[(r)(20)\left(\frac{2\pi}{60}\right)\right]^2(r)(.3)\,dr$$

$$Re_L = \frac{(1{,}000)(r)(20)\left(\frac{2\pi}{60}\right)(.3)}{1.395\times10^{-3}} = 4.504\times10^5 r$$

$$T_{TURB} = 4\int_{.7105}^{5}\left\{(.074)\frac{1}{[4.504\times10^5 r]^{\frac{1}{5}}} - \frac{1{,}050}{[4.504\times10^5 r]}\right\}(658)r^3\,dr$$

$$T_{TURB} = 4\int_{.7105}^{5}\left\{.005477\,r^{\frac{14}{5}} - .00233r^2\right\}658\,dr$$

$$T_{TURB} = 4\left\{\frac{.005477r^{\frac{19}{5}}}{\left(\frac{19}{5}\right)} - .00233\,\frac{r^3}{3}\right\}658\Big|_{.7105}^{5}$$

$$T_{TURB} = 4\{.6525 - .0968\}658$$

$$\boxed{T_{TURB} = 1{,}462\ N\text{-}m}$$

http://ingesolucionarios.blogspot.com

A spline shape is turning at a speed ω of 80 rad/s in air whose temperature is 20°C. Find the resisting torque from skin friction on three surfaces *AB*. The length of the spline is 2 m. The roughness *e* is 0.09 mm.

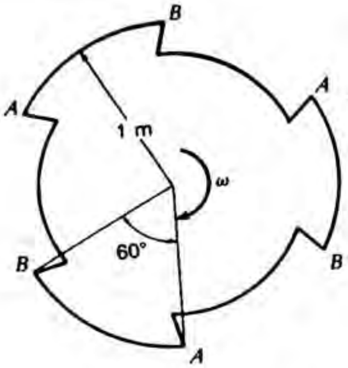


$$Re_L = \frac{(R\omega)\left(\frac{60}{360}\right)(2\pi R)}{\nu}$$

$$\nu = (1.85\times10^{-4})(.0929) = 1.719\times10^{-5}\ ft^2/s$$

$$\therefore\ Re_L = \frac{(1)(80)\left(\frac{1}{6}\right)(2)(\pi)(1)}{1.719\times10^{-5}} = 4.875\times10^6$$

$$\frac{L}{e} = \frac{\left(\frac{1}{6}\right)(2\pi)(1)(1{,}000)}{.09} = 1.164\times10^4$$

Go to Fig. (12.16). We are in transition zone. ∴ Read directly from chart.

$$C_f = .004$$

$$\therefore\ TORQUE = (3)(F)(R) = 3\left[(.004)\left(\frac{1}{2}\right)(\rho)(V^2)(A)\right]R$$

**Eq. of state:**

$$\rho = \frac{p}{RT} = \frac{101{,}325}{(287)(293)} = 1.205\ kg/m^3$$

$$\therefore\ TORQUE = 3\left\{(.004)\left(\frac{1}{2}\right)(1.205)[(1)(80)]^2(2)\left[\frac{60}{360}(2\pi)\right](1)\right\}1$$

$$\boxed{TORQUE = 96.9\ N\text{-}m}$$

http://ingesolucionarios.blogspot.com

A wind sock has a length of 3 ft and a mean diameter of 1 ft. A 30 mi/h wind is blowing at a temperature of 50°F. What is your estimate of the shear drag? Take $e$ = 0.072 in.

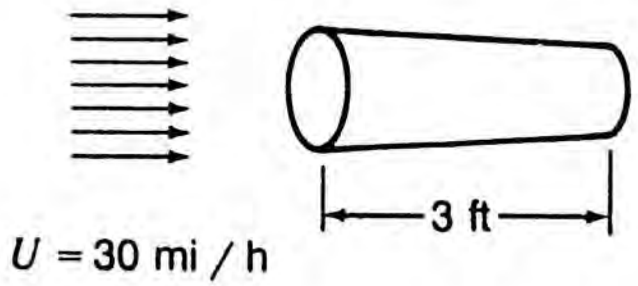


$$\nu = 1.8\times10^{-4}\ ft^2/s$$

$$Re = \frac{(30)\left(\frac{5{,}280}{3{,}600}\right)(3)}{1.8\times10^{-4}} = 7.33\times10^5$$

$$\frac{L}{e} = \frac{(3)(12)}{.072} = 500$$

From Fig. 12.16 we are in rough zone.

$$\therefore\quad C_f = \left\{1.89 + 1.62\log\left(\frac{L}{e}\right)\right\}^{-2.5} = .01019$$

$$\therefore\quad D = 2\left\{(.01019)\left(\frac{1}{2}\right)(\rho)\left[30\ \frac{5{,}280}{3{,}600}\right]^2(\pi)(1)(3)\right\}$$

Use **Eq. of state.**

$$\rho = \frac{p}{RT} = \frac{(14.7)(144)}{(53.3)(32.2)(460+50)} = .002418\ slug\ /ft^3$$

$$D = .4496\ N$$

http://ingesolucionarios.blogspot.com

http://ingesolucionarios.blogspot.com

A hollow cylinder coming from a discarded stage of a rocket is moving vertically in water. What is its terminal speed? *Hint*: First assume that we have *rough plate zone* of flow in the boundary layer and then *check* to see if your assumption is correct.

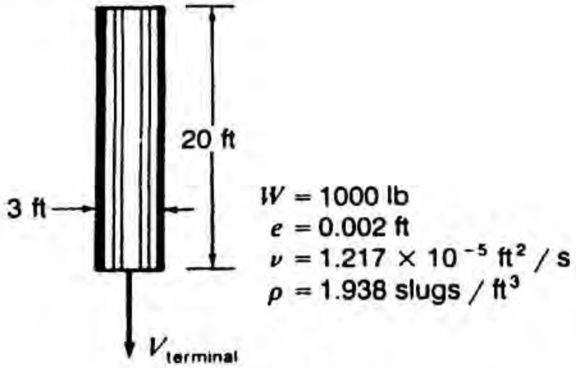


$$C_f = \left[1.89 + 1.62\log\left(\frac{20}{.002}\right)\right]^{-2.5} = .00493$$

∴ For terminal speed:

$$D = 1{,}000\ lb$$

$$(.00493)\left(\frac{1}{2}\right)(1.938)(V^2)(\pi)(3)(20)(2) = 1{,}000$$

$$\boxed{V = 23.55\ ft/sec}$$

$$Re = \frac{(23.55)(20)}{1.217\times10^{-5}} = 3.87\times10^7$$

$$\frac{L}{e} = \frac{.20}{.002} = 1\times10^4$$

∴ In rough zone assumption OK.

 http://ingesolucionarios.blogspot.com

A 40-ft *hollow* cylinder of diameter 3 ft from a spent rocket booster is falling down at a speed of 500 mi/h at an elevation corresponding to 25,000 ft standard atmosphere. The cylinder weighs 2000 lb and is oriented so its axis is vertical. What is the admissible roughness for hydraulically smooth flow in the entire boundary layer. If $e$ is $8 \times 10^{-4}$ ft and we neglect wave drag, what is the acceleration of the cylinder? Take $\nu = 6 \times 10^{-5}$ ft²/s.

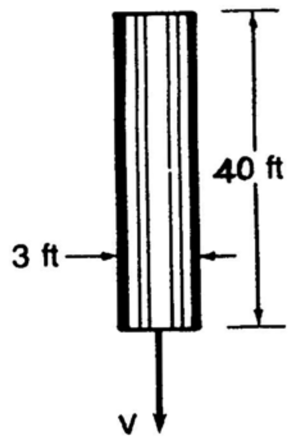


$$e_{adm} = L\left[\frac{100}{Re_L}\right]$$

$$Re_L = \frac{VL}{\nu} = \frac{(500)\left(\frac{5{,}280}{3{,}600}\right)(40)}{6\times10^{-5}} = 4.889\times10^{8}$$

$$\therefore \quad e_{adm} = 40\left(\frac{100}{4.889\times10^{8}}\right) = 8.182\times10^{-6}\ ft$$

$$\boxed{e_{adm} = 8.182\times10^{-6}\ ft}$$

For problem at hand:

$$\frac{L}{e} = \frac{40}{8\times10^{-4}} = 5\times10^{4}$$

We are in **rough zone.**

$$\therefore \quad C_f = [1.89 + 1.62 \log (5\times10^{4})]^{-2.5} = 3.593\times10^{-3}$$

$$D = 2\left\{(3.593\times10^{-3})\left(\frac{1}{2}\right)(.4481)(.002378)\left(500\ \frac{5{,}280}{3{,}600}\right)^2(\pi)(3)(40)\right\} = 776.1\ N$$

**Newton's Law**

$$(2{,}000 - 776.1) = \frac{2{,}000}{g}\,a$$

$$\boxed{a = 19.70\ ft/\text{sec}^2}$$ Downward

http://ingesolucionarios.blogspot.com 

http://ingesolucionarios.blogspot.com

12.52

For an underwater "village" for research, an American flag is in place as shown. It is of plastic material and can rotate so as to be parallel to the flow of water. If the critical Re is 500,000 and the roughness $e$ is 0.06 mm, what is the bending moment at the base from a flow rate of water of 25 kn? Take $\rho = 1000\ kg/m^3$ and $\nu = 0.0115 \times 10^{-4}\ m^2/s$. Note 1 kn = 0.5144 m/s.

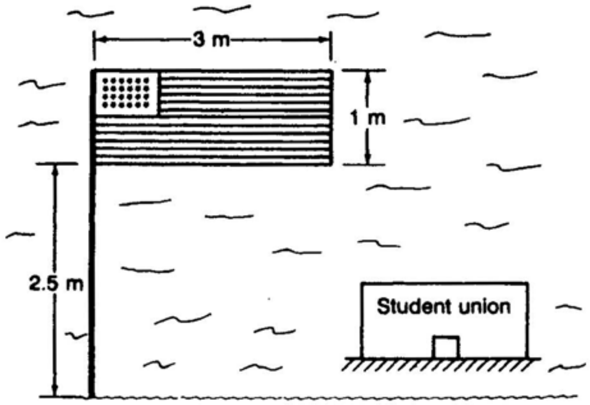


Compute $Re_L$ .

$$Re_L = \frac{(25)(.5144)(3)}{.0115\times10^{-4}} = 3.355\times10^7$$

$$\frac{L}{e} = \frac{3,000}{.06} = 5\times10^4$$

Go to Fig. (12.16). We are in transition zone. Reading directly from plot

$$C_f = .0032$$

$$\therefore\quad D = 2\left[C_f \frac{1}{2}\rho V^2 A\right] = 2\left\{(.0032)\left(\frac{1}{2}\right)(1,000)[(25)(.5144)]^2(1)(3)\right\} = 1,588\ N$$

$$\therefore\quad M = (1,588)\left(2.5 + \frac{1}{2}\right) = \boxed{4,763\ N\text{-}m}$$

 http://ingesolucionarios.blogspot.com

Three steel open cylinders on a flatcar moving at a speed of 50 m/s undergo skin drag. The 10 m/s wind is opposite to the velocity of the flatcar. If the roughness $e = 0.15$ mm, determine the skin drag. The diameter of each cylinder is 1 m. Neglect the effects on the flow about and through the cylinders arising from the flatcar and from each other. Take the transition Reynolds number to be $10^6$. Take $\nu = 0.180 \times 10^{-4}$ m²/s. The temperature is 20°C. How many kilowatts of power are needed to overcome this drag?

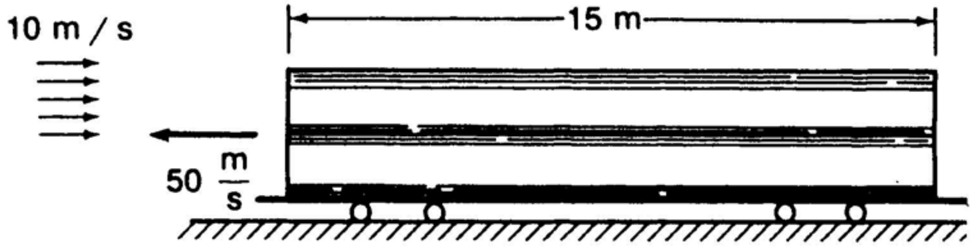


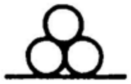

$D = 1$ m

$$Re_x = \frac{(60)(15)}{.180\times10^{-4}} = 5.00\times10^7$$

∴ **High Reynolds No.**

$$\frac{L}{e} = \frac{(15)(1{,}000)}{.15} = 1\times10^5$$

Look at chart. Transition zone.

$$\therefore \text{ Read off } \qquad C_f = .0028$$

Considering skin drags inside and outside of cylinders:

$$\therefore \quad D = 6\left[C_f \frac{1}{2} \rho V^2 A\right]$$

**Eq. of State:** $\qquad p\upsilon = RT$

$$\upsilon = \frac{RT}{p} = \frac{(287)(293)}{101{,}325} = .830 \ \frac{kg}{m^3}$$

$$\therefore \quad D = 6\left\{(.0028)\left(\frac{1}{2}\right)(.830)^{-1}(60^2)[(\pi)(1)(15)]\right\}$$

$$\boxed{D = 1{,}717 \ N}$$

$$Power = (1{,}717)(50) = \boxed{85.8 \ kW}$$

12.54

A thin plate moves at constant speed $V = 3$ m/s vertically into water which is at 20°C. What is the skin drag as a function of $x$. The plate is smooth. $Re_{cr} = 500{,}000$. Do a quasi-static analysis.

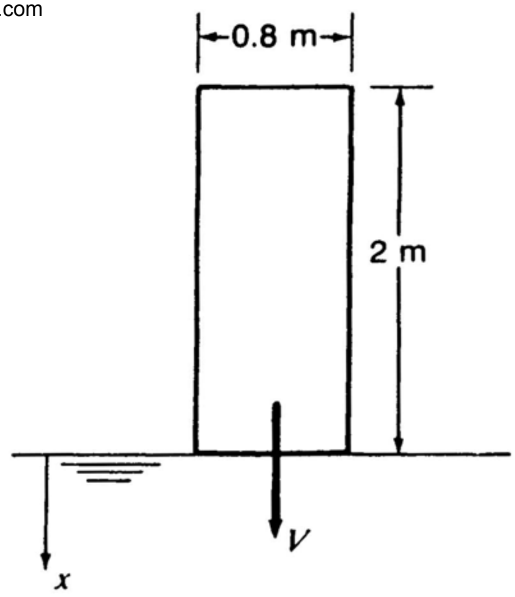


Do we ever get a turbulent flow? Look at extreme position with plate entirely in water.

$$Re_L = \frac{(3)(2)}{1.007\times10^{-6}} = 5.958\times10^6$$

$\therefore$ We get a low $Re_L$ turbulent flow region. Position for transition:

$$500{,}000 = \frac{(3)(x_0)}{1.007\times10^{-6}}$$

$$\boxed{x_0 = .1678\ m}$$

1) **Laminar Range** $0 \le x \le .1678$

$$C_f = (1.328)\left[\frac{(3)(x)}{1.007\times10^{-6}}\right]^{-\frac{1}{2}} = \frac{7.694\times10^{-4}}{\sqrt{x}}$$

$$D = 2\left[\frac{7.694\times10^{-4}}{\sqrt{x}}\ \frac{1}{2}\ (998.2)(3^2)(.8)(x)\right] = 5.53\sqrt{x}\ N$$

$$\boxed{D = 5.53\sqrt{x}\ N \qquad 0 \le x \le .1678}$$

2) **Turbulent Range** $.1678 \le x \le 2$

$$C_f = \frac{.074}{[Re_L]^{\frac{1}{5}}} - \frac{A}{[Re_L]}$$

http://ingesolucionarios.blogspot.com

(cont.)

$$C_f = \frac{.074}{\left[\dfrac{(3)(x)}{1.007\times10^{-6}}\right]^{\frac{1}{5}}} - \frac{1{,}700}{\left[\dfrac{(3)(x)}{1.007\times10^{-6}}\right]}$$

$$\therefore \quad C_f = \frac{3.753\times10^{-3}}{x^{\frac{1}{5}}} - \frac{5.706\times10^{-4}}{x}$$

$$D_{TURB} = 2\left\{\left[\frac{3.753\times10^{-3}}{x^{\frac{1}{5}}} - \frac{5.706\times10^{-4}}{x}\right]\left(\frac{1}{2}\right)(998.2)(3^2)(x)(.8)\right\}$$

$$\boxed{D_{TURB} = 26.97x^{\frac{4}{5}} - 4.101\ N \qquad .1678 \le x \le .8}$$

---

12.55

In Prob. 12.55 the plate is rough with $\epsilon$ = 0.4 mm. Determine the skin drag as functions of $x$. Do not give ranges.
(*a*) The hydraulically smooth zone. Note Eq. 13.76 not valid for $Re_L < 5 \times 10^5$.
(*b*) The transition zone using an average value of 0.0045 for $C_f$ from the chart.
(*c*) The rough zone.
The length of the plate for this problem is 4 m.

**Hydraulically Smooth Range**

$$C_f = \frac{.074}{\left(\dfrac{3x}{1.007\times10^{-6}}\right)^{\frac{1}{5}}} - \frac{1{,}700}{\dfrac{3x}{1.007\times10^{-6}}} = \left[\frac{3.753\times10^{-3}}{x^{\frac{1}{5}}} - \frac{5.706\times10^{-4}}{1.007\times10^{-6}}\right]$$

$$\boxed{D = 26.97x^{\frac{4}{5}} - 4.101\ N}$$

**Transition Zone**

$$D = (.0045)\left(\frac{1}{2}\right)(983)(3^2)[(.8)x] = 15.9246x$$

**Rough Zone**

$$D = \left[1.89 + 1.62\log\frac{4}{e}\right]^{-2.5}\left(\frac{1}{2}\right)(983)(3^2)(.8)(x) = 17.46x$$

http://ingesolucionarios.blogspot.com

12.56

A ship has a length of 250 m and is moving at a speed of 30 knots. The wetted area is 14,000 $m^2$. What is the admissible roughness? What is the minimum possible skin drag for this case? If $e = 0.1875$ mm, what is the skin drag and the power needed to overcome this drag? The kinematic viscosity of the seawater is $1 \times 10^{-6}$ $m^2/s$ and $\rho = 1010\ kg/m^3$. Transition for the boundary layer is at $Re_{cr} = 500{,}000$. What is the percent increase in power needed as a result of plate roughness?

$$Speed = (30)(.5144) = 15.43 \quad m/s$$

$$e_{adm} = \ell\left[\frac{100}{Re_L}\right] = 250\left[\frac{100}{\dfrac{(15.43)(250)}{1\times10^{-6}}}\right] = .00648 \quad mm$$

$$Re_L = \frac{(15.43)(250)}{1\times10^{-6}} = 3.86\times10^9$$

$$C_f = \frac{.455}{[\log 3.86\times10^9]^{2.58}} - \frac{1{,}700}{3.86\times10^9} = .001334$$

$$D = (.001334)\left(\frac{1}{2}\right)(1{,}010)(15.43^2)(14{,}000) = 2.25\times10^6\ N = 2.25\times10^3\ kN$$

$$POWER = (2.25\times10^6)(15.43) = 34{,}600\ kW$$

For $e = .1875\ mm$, find $POWER$.

$$\frac{L}{e} = 1.333\times10^6$$

For $Re_L = 3.86\times10^9$ we are in the fully **rough zone** of flow. Hence, using Eq. (12.82)

$$C_f = (1.89 + 1.62\log 1.333\times10^6)^{-2.5} = .002085$$

$$D = (.002085)\left(\frac{1}{2}\right)(1{,}010)(15.43^2)(14{,}000) = 3.51\times10^3\ kN$$

$$POWER = (3.51\times10^3)(15.43) = 54{,}200\ kW$$

$$\%\ increase = \frac{54{,}200 - 34{,}600}{34{,}600}(100) = 56.5\%$$

There is a **56.5%** increase in power needed due to roughness.



http://ingesolucionarios.blogspot.com Edu_Zegarr_ch

http://ingesolucionarios.blogspot.com

12.57

In Prob. 12.31, what is the admissible roughness $e_{adm}$ so as to have hydraulically smooth plate flow over the entire plate? Find $\tau_0$.

$$e_{adm} = \ell \frac{100}{Re_L} = 30 \frac{100}{\left[\frac{(100)(30)}{1.7\times10^{-4}}\right]}$$

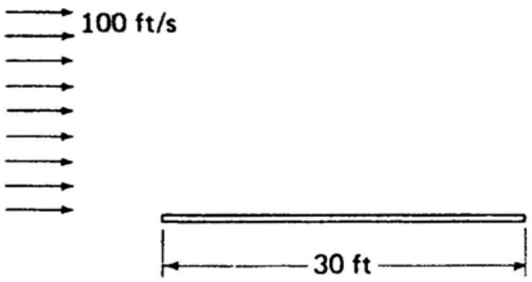


$$e_{adm} = .000170 \ ft$$

$$\therefore \quad \frac{\sqrt{\frac{\tau_0}{\rho}}(e_{adm})}{\nu} = 5$$

$$\rho = \frac{p}{RT} = \frac{(14.7)(144)}{(53.3)(g)(520)} = .002372$$

$$\tau_0 = \left[\frac{5\nu\sqrt{\rho}}{e_{adm}}\right]^2 = \left[\frac{(5)(1.7\times10^{-4})\sqrt{.002372}}{.000170}\right]^2$$

$$\tau_0 = .0593 \ psf$$

12.58

In Prob. 12.38. what is the maximum roughness $e$ that can be accepted to still have hydraulically smooth flow over the entire wetted boundary? If the drag for smooth barge is 526 N, what must it be for $e$ = 0.050 mm?

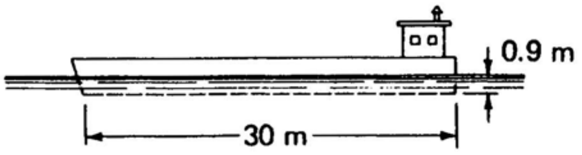


$$e_{adm} = (30)\frac{100}{\left[\frac{(1)(30)}{1.141\times10^{-6}}\right]} = .0001141 \ m = .1141 \ mm$$

Will still be **526 *N*** since the drag will be the same as for smooth surface.

http://ingesolucionarios.blogspot.com

Do Prob. 12.41 for the case of a rough surface where $e = 0.030$ mm.

$$Re_L = \frac{(40)(.5144)(2)(1,026)}{1.395\times10^{-3}} = 3.03\times10^7$$

$$\frac{L}{e} = \frac{(2)(1,000)}{.030} = 6.67\times10^4$$

We are in the transition zone. Use Eq. (13.73).

$$\therefore \quad C_f = \frac{.031}{(3.03\times10^7)^{1/7}} = \frac{3,300}{(3.03\times10^7)} = .00254$$

$$D = (4)(.00254)\left(\frac{1}{2}\right)(1,026)[(40)(.5144)]^2(2)(2) = 8,827 \ N$$

$$\boxed{D = 8,827 \ N}$$

http://ingesolucionarios.blogspot.com

12.60

In Prob. 12.40, what is the percentage increase in power needed for the case of a rough surface having $e = 0.050$ mm? The power needed for a smooth surface was 61.3 kW.

From Prob. 12.40

$$L = 4\ m \qquad V = 40\ kn \qquad T = 10°C \qquad D = .49\ m$$

$$\nu = 1.361\times10^{-6}\ m^2/s \qquad \rho = 1{,}025\ kg/m^3$$

For torpedo in sea water

$$Re_L = \frac{(40)(.5144)(4)}{1.361\times10^{-6}} = 6.05\times10^7$$

$$\frac{L}{e} = \frac{(4)(1{,}000)}{.05} = 8\times10^4$$

We are in the transition zone. We read off the following value of $C_f$ :

$$C_f = .003$$

$$D = (.003)\left(\frac{1}{2}\right)(1{,}025)[(40)(.5144)]^2(\pi)(.49)(4) = 4{,}008\ N$$

$$Power = (4{,}008)[(40)(.5144)] = 82.5\ kW$$

$$\%\ increase = \frac{82.5-61.3}{61.3}(100) = 34.5\%$$

 http://ingesolucionarios.blogspot.com

In Prob. 12.44, we found the drag to be 3052 N. If after a summer's use the drag was measured to be 6500 N, what would be the roughness $e$?

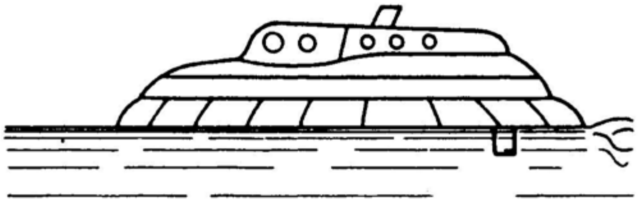

From Prob. 13.44 for rudders, $V = 100\ km/hr \quad width = .75\ m \quad L = 1\ m$

$Re_{cr} = 5\times10^5 \quad T = 15°C \quad D = 3{,}052\ N$

$$Re_L = \frac{(100)\left(\frac{1{,}000}{3{,}600}\right)(.75)}{1.141\times10^{-6}} = 1.826\times10^7$$

For this problem $D = 6{,}500\ N$

Compute $C_f$

$$D = 6{,}500 = 4\left[(C_f)\left(\frac{1}{2}\right)(999.1)\left(\frac{100}{3.6}\right)^2(.75)(1)\right]$$

$$C_f = .005621$$

**Assume** fully rough zone.

$$\therefore \quad .005621 = \left(1.89+1.62\log\frac{750}{e}\right)^{-2.5} = \left[\frac{1}{1.89+1.62\log\left(\frac{750}{e}\right)}\right]^{2.5}$$

$$.1259 = \frac{1}{1.89+1.62\log\left(\frac{750}{e}\right)}$$


http://ingesolucionarios.blogspot.com Edu_Zegarr_ch

http://ingesolucionarios.blogspot.com
(cont.)

$$\therefore \quad \left(1.89 + 1.62 \log \frac{750}{e}\right) = 7.945$$

$$\log \frac{750}{e} = 3.737$$

$$\frac{750}{e} = 5{,}458$$

$$e = .1374 \quad mm$$

Are we in fully rough zone?

$$\begin{cases} \dfrac{L}{e} = 5.458 \times 10^3 \\ Re = 1.826 \times 10^7 \end{cases}$$

We are in the fully rough zone. Hence

$$\boxed{e = .1374 \quad mm}$$

http://ingesolucionarios.blogspot.com

 http://ingesolucionarios.blogspot.com

The rudders in Prob. 12.45 are rough, having a roughness coefficient $e$ of 0.0400 mm. What is the drag on the vehicle at 60 km/h?

What zone of flow are we in at the extremities of the rudder?

$$(Re_L)_{max} = \frac{\left(\frac{60}{3.6}\right)(.5)}{1.141\times10^{-6}} = 7.3\times10^6$$

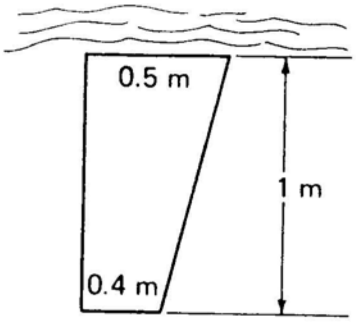


$$\frac{L}{e} = \frac{500}{.04} = 1.25\times10^4$$

$$(Re_L)_{min} = \frac{\left(\frac{60}{3.6}\right)(.4)}{1.141\times10^{-6}} = 5.84\times10^6$$

$$\frac{L}{e} = \frac{400}{.04} = 1.00\times10^4$$

We are entirely in the transition zone. For an approximate result, we use a plate $.45\ m$ by $1\ m$.

$$Re_L = \frac{\left(\frac{60}{3.6}\right)(.45)}{1.141\times10^{-6}} = 6.573\times10^6$$

$$\frac{L}{e} = \frac{450}{.04} = 1.125\times10^4$$

Look up $C_f$.

$$C_f = .0041$$

Hence

$$D = 4\left[(.0041)\left(\frac{1}{2}\right)(999.1)\left(\frac{60}{3.6}\right)^2(1)(4.5)\right]$$

$$\boxed{D = 1.024\times10^4\ N}$$



http://ingesolucionarios.blogspot.com Edu_Zegarr_ch

http://ingesolucionarios.blogspot.com

12.63

A delta-winged fighter plane is flying subsonically at a speed of 600 km/h. What is the skin drag from the wing, which has a roughness coefficient due to camouflage paint and flush riveting of 0.0050 mm? Transition occurs at $Re_{cr}$ = 500,000. Air is at 10°C.

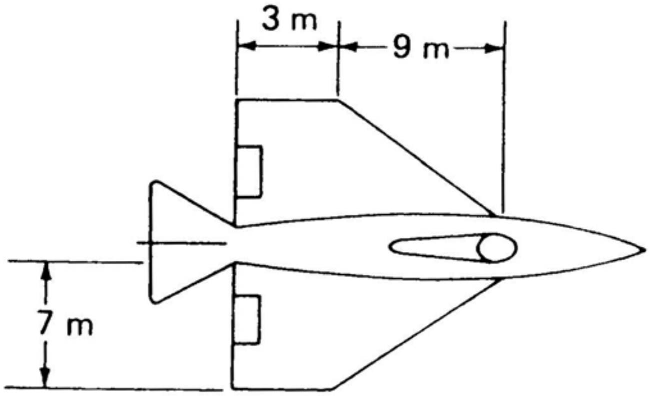


Find maximum and minimum values of $Re_L$ .

$$\nu = 1.55\times10^{-5}\ m^2/s$$

$$(Re_L) = \frac{(600)\left(\frac{1{,}000}{3{,}600}\right)(12)}{1.55\times10^{-5}} = 1.29\times10^8$$

$$\frac{L}{e} = \frac{(12)(1{,}000)}{.005} = 2.4\times10^6$$

$$(Re_L) = \frac{(600)\left(\frac{1{,}000}{3{,}600}\right)(3)}{1.55\times10^{-5}} = 3.23\times10^7$$

$$\frac{L}{e} = \frac{(3)(1{,}000)}{.005} = 6\times10^5$$

Entire wing is in **hydraulically smooth** zone and is **high Reynolds** no. flow. Use a uniform plate having **same area** and same **average length**.



http://ingesolucionarios.blogspot.com Edu_Zegarr_ch

http://ingesolucionarios.blogspot.com

$$Re_L = \frac{(600)\left(\frac{1,000}{3,600}\right)(7.5)}{1.55\times10^{-8}} = 8.0645\times10^7$$

$$\frac{L}{e} = 1.5\times10^6$$

∴ Hydraulically smooth zone also.

$$\therefore \quad C_f = \frac{.455}{[\log(Re_L)]^{2.58}} - \frac{A}{(Re_L)}$$

$$C_f = \frac{.455}{[\log(8.0645\times10^7)]^{2.58}} - \frac{1,700}{8.6405\times10^7} = .057526$$

$$D = 4\left\{(.00217)\left(\frac{1}{2}\right)\rho\left[(600)\left(\frac{1,000}{3,600}\right)\right]^2(7)(7.5)\right\}$$

Eq. of state for $\rho$.

$$\rho = \frac{p}{RT} = \frac{101,325}{(287)(283)} = 1.2475 \ \frac{kg}{m^3}$$

$$\therefore \quad \boxed{D = 7,707 \ N}$$


http://ingesolucionarios.blogspot.com
Edu_Zegarr_ch

http://ingesolucionarios.blogspot.com

12.66

An object has a projected area of 10 $ft^2$ in the direction of its motion. It has a drag coefficient of 0.4 for a Reynolds number of $10^7$ using a characteristic length of 5 ft. For this Reynolds number, what is the drag on the object when moving through water at 60°F? What is the drag when moving through air at 60°F and 14.7 lb/in² absolute?

$$A = 10 \quad ft^2 \qquad C_D = .4 \quad \text{when} \quad Re = 10^7$$

$$L = 5 \quad ft \qquad Re = 10^7$$

a) Through water:

$$D_1 = C_D A \frac{\rho U^2}{2} = (.4)(10)(1.938)\frac{U^2}{2}$$

But

$$10^7 = \frac{UL}{\nu} = \frac{(U)(5)}{.1217 \times 10^{-4}}$$

$$U = 24.3 \quad ft/\text{sec} \qquad \therefore \quad D_1 = 2{,}296 \quad lb$$

b) Through air:

$$D_2 = (.4)(10)(.00238)\frac{U^2}{2}$$

But

$$10^7 = \frac{(U)(5)}{1.70 \times 10^{-4}}$$

$$U = 340 \quad ft/\text{sec}$$

$$\boxed{D_2 = 550 \quad lb}$$

12.67 http://ingesolucionarios.blogspot.com

A body travels through air at 60°F at a speed of 100 ft/s, and 8 hp is required to accomplish this. If the projected area is 10 ft² in the direction of motion, determine the coefficient of drag.

$$\begin{cases} U = 100 \quad ft/sec \\ T = 60° F \\ A = 10 \quad ft^2 \\ HP = 8 \end{cases}$$

We compute the drag:

$$(D)(100) = (HP)(550) = 4{,}400$$

$$D = 44 \quad lb$$

$$\therefore \quad C_D = 2\,\frac{\left(\frac{44}{10}\right)}{(.00238)(10^4)}$$

$$\boxed{C_D = .370}$$

12.68

A streamline strut has a width of 3 in. What should the length be for minimal total drag from pressure and skin friction? If the strut were not streamlined, what diameter rod would give the same drag per unit length for turbulent flow? What does this tell you about the advantage of streamlining?

$\frac{t}{L}$ for min. drag is .26 .

$$\therefore \quad L = \frac{3}{.26} = 11.54 \quad in.$$

$$Drag/Unit\ Length = (C_D)\left(\frac{1}{2}\right)(\rho U^2)(t)(1) = (.062)\left(\frac{1}{2}\right)(\rho U^2)\left(\frac{3}{12}\right)(1) = .007550\,\rho U^2$$

For rod:

$$Drag/Unit\ Length = (.3)\left(\frac{1}{2}\right)(\rho U^2)\left(\frac{Diam}{12}\right)(1) = .01250(\rho U^2)Diam$$

Equate drags.

$$.007550\,\rho U^2 = .01250(\rho U^2)Diam$$

$$\boxed{Diam = .62 \quad in.}$$



http://ingesolucionarios.blogspot.com Edu_Zegarr_ch

http://ingesolucionarios.blogspot.com

An anemometer is held stationary in a 50-knot wind. What torque $T$ is required to maintain the instrument stationary? Cups $A$ and $B$ are oppositely oriented and each has a diameter of 75 mm. The wind is oriented perpendicular to the arm connecting the cups. Air is at a temperature of 20°C.

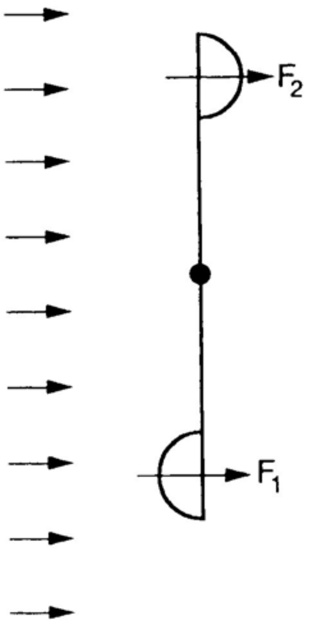


$$TORQUE = (F_1)(.200) - (F_2)(.200) = \left[(1.42)\left(\frac{1}{2}\rho U^2\right)(\pi)\left(\frac{.075^2}{4}\right)\right.$$

$$\left.-(.38)\left(\frac{1}{2}\rho U^2\right)(\pi)\left(\frac{.075^2}{4}\right)\right].200$$

$$\rho = \frac{101{,}325}{(287)(293)}(1.205) \quad \frac{kg}{m^3}$$

$$TORQUE = (.200)\left(\frac{1}{2}\right)(1.205)[(50)(.5144)]^2(\pi)\,\frac{(.075)^2}{4}\,(1.42-.38)$$

$$\boxed{TORQUE = .366 \quad N\text{-}m}$$


http://ingesolucionarios.blogspot.com
Edu_Zegarr_ch

 http://ingesolucionarios.blogspot.com

A sports car has a coefficient of drag of 0.40 and a frontal area of 25 ft². The vehicle weighs 2600 lb. If a total constant torque of 800 ft · lb is maintained on the rear wheels, how long will it take for the vehicle to reach 60 mi/h if we neglect the rotational inertia of the wheels? The air is at 60°F. Neglect rolling resistance of the tires. The tires have a 24-in diameter. *Hint*:

$$\int \frac{dx}{c^2 - x^2} = \frac{1}{2c} \ln\left(\frac{c+x}{c-x}\right)$$

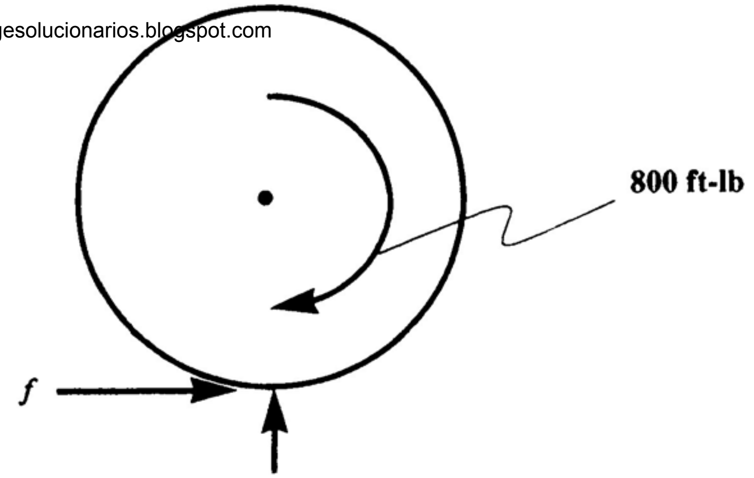


If we neglect inertia, we equate torques about center.

$$f(12) = (800)(12)$$

$$f = 800 \quad lb$$

**Newton's Law**:

$$800 - D = \frac{2{,}600}{g}\left(\frac{dV}{dt}\right) \qquad (1)$$

$$D = (.40)\left(\frac{1}{2}\right)(\rho V^2)(25)$$

$$\rho = \frac{(14.7)(144)}{(53.3)(g)(520)} = .002372 \quad \frac{slug}{ft^3}$$

$$\therefore \quad D = (.40)\left(\frac{1}{2}\right)(.002372)(25)V^2 = .01186V^2$$

Go back to Newton's Law.

$$800 - .01186V^2 = \frac{2{,}600}{32.2}\frac{dV}{dt}$$

http://ingesolucionarios.blogspot.com Edu_Zegarr_ch 

http://ingesolucionarios.blogspot.com
(cont.)

Separate variables.

$$\left(\frac{2,600}{32.2}\right)\left[\frac{dV}{800 - .01186V^2}\right] = dt$$

$$\left(\frac{2,600}{32.2}\right)\left[\frac{dV}{(67,453 - V^2)(.01186)}\right] = dt$$

Integrate:

$$\left[\frac{2,600}{(32.2)(.01186)}\right]\left[\frac{1}{(2)(\sqrt{67,453})}\right]\ln\left[\frac{\sqrt{67,453}+V}{\sqrt{67,453}-V}\right] = t + C_1$$

$$13.11 \ln\left[\frac{260+V}{260-V}\right] = t + C_1$$

When $t=0$ , $V=0$ $\therefore$ $C_1=0$

When $V = 60\left(\frac{5,280}{3,600}\right) = 88 \quad \frac{ft}{sec}$ , we get for the time $t$

$$13.11 \ln\left[\frac{260+88}{260-88}\right] = t$$

$$\boxed{t = 9.24 \quad \text{sec}}$$

http://ingesolucionarios.blogspot.com Edu_Zegarr_ch 

 http://ingesolucionarios.blogspot.com

A wind of 50 km/h impinges normal to the sign. What is the bending moment on each leg of the support at the ground? The temperature is 5°C. Neglect the drag on the supports.

The ratio of width $b$ to height $h$ is:

$$\frac{b}{h} = \frac{5}{2} = 2.5$$

We estimate from Table 13.3 that $C_D$ is 1.19 .

$$\therefore \quad D = (1.19)\left(\frac{1}{2}\right)(\rho)(U^2)(2)(5)$$

$$\rho = \frac{101{,}325}{(287)(278)} = 1.270 \quad \frac{kg}{m^3}$$

$$\therefore \quad D = (1.19)\left(\frac{1}{2}\right)(1.270)\left(50\ \frac{1{,}000}{3{,}600}\right)^2(2)(5) = 1458 \quad N$$

$$M_A = \frac{1}{2}\,(1{,}458)(5+1) = 4{,}374 \quad N\text{-}m$$

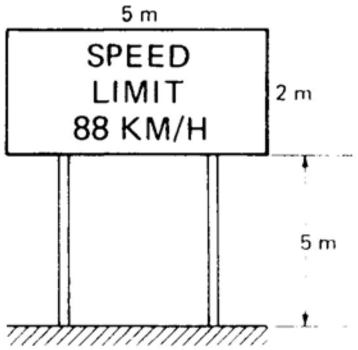


We are neglecting the drag on the two supports and so $M_A$ will be less than the proper bending moment.


http://ingesolucionarios.blogspot.com Edu_Zegarr_ch

12.72 http://ingesolucionarios.blogspot.com

$$D = (1.2)\left(\frac{1}{2}\right)(\rho V^2)(30) + (.4)\left(\frac{1}{2}\right)(\rho)(V^2)(20)$$

**A fighter plane is moving on the ground after landing at a speed of 350 km/h when the pilot deploys his braking parachute. The coefficient of drag for the parachute is 1.2 and the frontal area is 30 m². The plane has a coefficient of drag of 0.4 and a frontal area of 20 m². If the engine is off, how long does it take to slow down from 350 km/h to 200 km/h? The air is at 10°C. The plane has a mass of 8 Mg. What is the maximum deceleration in g's? Neglect rolling resistance of tires.**

$$\rho = \frac{101{,}325}{(287)(283)} = 1.2475 \quad \frac{kg}{m^3}$$

$$D = \left(\frac{1}{2}\right)(1.2475)(V^2)[(1.2)(30) + (.4)(20)] = 27.45V^2$$

**Newton's Law:**

$$m\,\frac{dV}{dt} = -27.45V^2$$

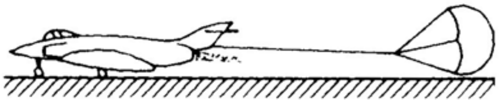

$$(8)(10^3)\left(\frac{dV}{dt}\right) = -27.45V^2$$

$$\frac{dV}{V^2} = \left[\frac{-27.45}{8\times10^3}\right]dt$$

Integrate:

$$-V^{-1} = -3.43\times10^{-3}t + C_1$$

When $t=0$, $V=(350)\left(\frac{1{,}000}{3{,}600}\right) = 97.2 \quad m/\text{sec}$. Hence:

$$-\frac{1}{97.2} = C_1$$

$$\therefore \quad \frac{1}{V} = 3.43\times10^{-3}t + \frac{1}{97.2}$$

Set $V = (200)\left(\frac{1{,}000}{3{,}600}\right) = 55.56 \quad m/\text{sec}$

$$\frac{1}{55.56} = 3.43\times10^{-3}t + \frac{1}{97.2} \qquad t = 2.25 \quad \text{sec}$$

$$\left(\frac{dV}{dt}\right)_{\max} = -\frac{\frac{27.45}{8\times10^3}(97.2)^2}{9.81} = \boxed{-3.305g \quad \frac{m}{s^2}}$$

 http://ingesolucionarios.blogspot.com

In Prob. 12.72 what is the largest frontal area of the braking parachute if the maximum deceleration of the plane is to be 5 g's when at a speed of 350 km/h the parachute is first deployed?

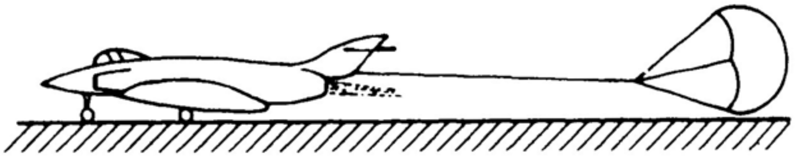

$$D = (1.2)\left(\frac{1}{2}\right)(\rho V^2)(A) + (.4)\left(\frac{1}{2}\right)(\rho V^2)(20)$$

$$\rho = \frac{101{,}325}{(287)(283)} = 1.248$$

For $V$, use $(350)\left(\frac{1{,}000}{3{,}600}\right) = 97.2 \quad m/s$

$$D = 7.08\times10^3 A + 4.72\times10^4$$

**Newton's Law:**

$$-(8\times10^3)[(5)(9.81)] = -[7.08\times10^3 A + 4.72\times10^4]$$

$$A = 48.76 \quad m^2$$



http://ingesolucionarios.blogspot.com Edu_Zegarr_ch

 http://ingesolucionarios.blogspot.com

In Sect. 68 we examined laminar flow between parallel infinite plates separated by distance $h$. For turbulent flow we can assume a logarithmic velocity profile

$$\frac{\bar{V}_x}{V_*} = \frac{1}{\alpha}\ln\frac{\eta V_*}{\nu} + B \qquad 0 < \eta < \frac{h}{2}$$

where $\eta$ is measured from the bottom plate upward to the midplane. Form the equation for the average velocity $\bar{V}_{mean}$ between the plates. To introduce $f$ show that using $\alpha = 0.41$ and $B = 5$,

$$\frac{1}{\sqrt{f}} = 2.0\log\left(\mathrm{Re}_{D_H}\sqrt{f}\right) - 1.19$$

which is the analog of Prandtl's universal pipe friction formula. *Hint*: Use the result

$$\frac{\bar{V}_{mean}}{V_*} = \left(\frac{8}{f}\right)^{1/2}$$

$$\frac{\bar{V}_x}{V_*} = \frac{1}{\alpha}\frac{\eta V_*}{\nu} + B$$

For a unit width $\frac{h}{2}$

$$q = 2\int_0^{\frac{h}{2}} \bar{V}_x\, d\eta\ (1) = 2\int_0^{\frac{h}{2}} \frac{V_*}{\alpha}\left(\ln\eta + \ln\frac{V_*}{\nu}\right)dy + V_*(h)(1)(B)$$

$$q = 2\frac{V_*}{\alpha}\left\{(\eta\ln\eta - \eta)\Big|_0^{\frac{h}{2}} + \left(\ln\frac{V_*}{\nu}\right)\left(\frac{h}{2}\right)\right\} + hBV_*$$

$$= 2\frac{V_*}{\alpha}\left\{\frac{h}{2}\ln\left(\frac{h}{2}\right) - \left(\frac{h}{2}\right) + \left(\ln\frac{V_*}{\nu}\right)\left(\frac{h}{2}\right)\right\} + hBV_*$$

$$= \frac{2V_*}{\alpha}\left\{\frac{h}{2}\ln\left(\frac{V_*\frac{h}{2}}{\nu}\right) - \frac{h}{2}\right\} + hBV_* = V_* h\left\{\frac{1}{\alpha}\ln\left(\frac{V_*\frac{h}{2}}{\nu}\right) + B - \frac{1}{\alpha}\right\}$$

$$\bar{V}_{mean} = \frac{q}{(h)(1)} = V_*\left\{\frac{1}{\alpha}\ln\left(\frac{V_*\frac{h}{2}}{\nu}\right) + B - \frac{1}{\alpha}\right\}$$

We now use the following result.

12.75 http://ingesolucionarios.blogspot.com

A mixing rotor consists of cylindrical arms $BC$ and blades $AB$. The blades are oriented parallel to the free surface and have a width in this direction of 0.2 m. What is your estimate of the rotational drag of this rotor at $\omega = 20$ rad/s. Take $C_D$ for cylinder to be 0.30 and the blades to be thin plates for which $Re_{cr} = 500{,}000$. The water is at 20°C. Take $e$ for blades to be 0.4 mm.

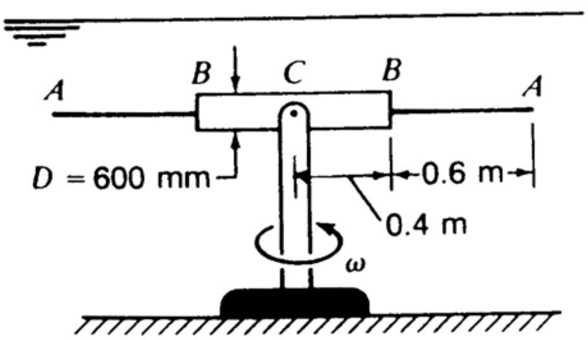


Find $Re_L$ at $B$ and $A$ for blades.

$$(Re_L)_B = \frac{(.4)(20)(.2)}{1.007\times10^{-6}} = 1.589\times10^6$$

$$(Re_L)_A = \frac{(1)(20)(.2)}{1.007\times10^{-6}} = 3.972\times10^6$$

also

$$\left(\frac{L}{e}\right)_A = \left(\frac{L}{e}\right)_B = \frac{(.2)(1{,}000)}{.4} = 500$$

$\therefore$ We see that we are entirely in **rough zone**.

$$\therefore \quad C_f = [1.89 + 1.62\log(500)]^{-2.5} = .01019$$

Now compute torque form blade and cylinder.

$$TORQUE = 2\int_0^{.4} C_D\left(\frac{1}{2}\rho V^2\right) dA\, r + 4\int_{.4}^{1} C_f\left(\frac{1}{2}\rho V^2\right) dA\, r$$

$$= 2\int_0^{.4} (.30)\left(\frac{1}{2}\right)(998.2)[(r)(20)]^2(.6)\,dr\, r + 4\int_{.4}^{1} (.01019)\left(\frac{1}{2}\right)(998.2)[r(20)]^2(.2)\,dr\, r$$

$$= 7.187\times10^4 \left.\frac{r^4}{4}\right|_0^{.4} + 1.627\times10^3 \left.\frac{r^4}{4}\right|_{.4}^{1} = 460 + 396.3 = 856\ N\text{-}m$$

$$\therefore \quad \boxed{TORQUE = 856\ N\text{-}m}$$



http://ingesolucionarios.blogspot.com Edu_Zegarr_ch

http://ingesolucionarios.blogspot.com
(cont.)

$$\frac{\overline{V}_{mean}}{V_*} = \left(\frac{8}{f}\right)^{\frac{1}{2}}$$

$$\therefore \quad \overline{V}_{mean} = V_*\left(\frac{8}{f}\right)^{\frac{1}{2}}$$

Subst.

$$V_*\left(\frac{8}{f}\right)^{\frac{1}{2}} = V_*\left\{\frac{1}{\alpha}\ln\left(\frac{V_*h}{2\nu}\right) + B - \frac{1}{\alpha}\right\}$$

Replace $V_*$ by $\frac{\overline{V}_{mean}\sqrt{f}}{\sqrt{8}}$. We get

$$\sqrt{\frac{8}{f}} = \frac{1}{\alpha}\left\{\ln\left[\left(\frac{\overline{V}_{mean}h}{2\nu}\right)\left(\frac{\sqrt{f}}{\sqrt{8}}\right)\right] + \alpha B - 1\right\}$$

$$\frac{\sqrt{8}}{\sqrt{f}} = 2.439\left\{\ln\left[\left(\frac{\overline{V}_{mean}2h}{\nu}\right)\sqrt{f}\right] - \ln 4\sqrt{8} + .41B - 1\right\}$$

$$\frac{1}{\sqrt{f}} = .8623\left\{\ln\left[Re_H\sqrt{f}\right] - 2.426 + 2.050 - 1\right\}$$

$$\frac{1}{\sqrt{f}} = .8623\left\{\ln\left[Re_H\sqrt{f}\right] - 1.376\right\}$$

$$\boxed{\frac{1}{\sqrt{f}} = 1.986\left\{\log\left[Re_H\sqrt{f}\right]\right\} - 1.187}$$

http://ingesolucionarios.blogspot.com

12.76

In the preceding problem the water is evacuated leaving air at 20°C. How long will it take for a torque of 10 N-m to bring the system up to speed if it has a radius of gyration about the vertical axis of 1.3 m and a mass of 50 kg. Set up in the form of a quadrature

$$t = \int_0^{20} \frac{d\omega}{f(\omega)}$$

where $f(\omega)$ is a function of $\omega$.

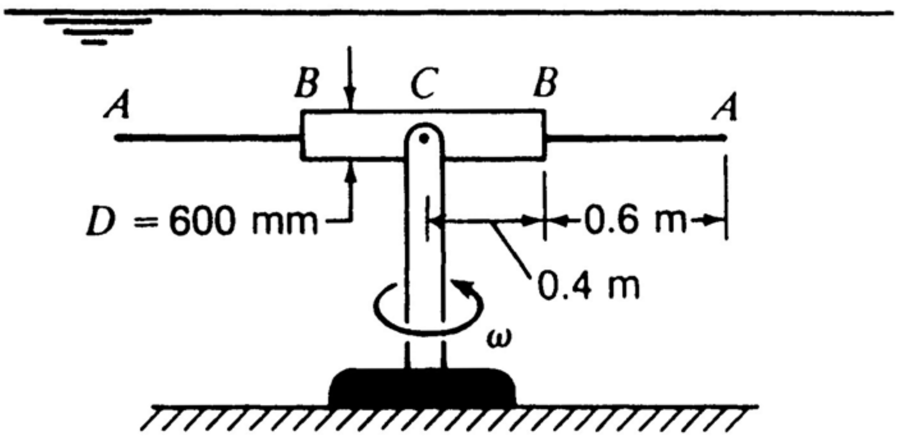


$$\rho = \frac{p}{RT} = \frac{101{,}325}{(287)(293)} = 1.205\ kg/m^3$$

From appendix:

$$\nu = (1.8\times10^{-4})(.0929) = 1.672\times10^{-5}\ m^2/s$$

Consider conditions at 20 *rad*/sec

$$(Re_L)_B = \frac{(.4)(20)(.2)}{1.672\times10^{-5}} = 9.569\times10^4$$

$$(Re_L)_A = \frac{(1)(20)(.2)}{1.672\times10^{-5}} = 2.392\times10^5$$

Since $(Re_L) < Re_{cr} = 5\times10^5$ the boundary layer remains **laminar**

$$\therefore\ C_f = \frac{1.328}{(Re_L)^{\frac{1}{2}}}$$

Compute **torque**.

$$TORQUE = 10 - 2\int_0^{.4} C_D\left(\frac{1}{2}\rho V^2\right) dA\, r - 4\int_{.4}^{1} C_f\left(\frac{1}{2}\rho V^2\right) dA\, r$$

$$= 10 - 2\int_0^{.4}(.3)\left(\frac{1}{2}\right)(1.205)[r^2\omega^2]dr(.6)r$$

$$- 4\int_{.4}^{1}\frac{1.328}{\left[\dfrac{(r\omega)(.2)}{1.672\times10^{-5}}\right]^{\frac{1}{2}}}\left(\frac{1}{2}\right)(1.205)(r^2\omega^2)dr(.2)r$$

$$\therefore\ T = 10 - \omega^2(1.388\times10^{-3}) - \omega^{\frac{3}{2}}(1.604\times10^{-3})$$

Use **moment of momentum**.

$$10 - (1.388\times10^{-3})\omega^2 - (1.604\times10^{-3})\omega^{\frac{3}{2}} = (1.3)^2(50)\frac{d\omega}{dt}$$

$$\therefore\quad \boxed{t = \int_0^{20}\frac{84.5\, d\omega}{10 - (1.388\times10^{-3})\omega^2 - (1.604\times10^{-3})\omega^{\frac{3}{2}}}}$$

http://ingesolucionarios.blogspot.com

12.77

An automobile has a coefficient of drag of 0.36 and a frontal area $A$. A remodeling of the sheet metal reduces $C_D$ to 0.30 and the frontal area of $0.9A$. If the older model gets 26 mi/gal at 55 mi/h, what should the newer model get at the same speed? The drive system has not been changed.

$$D_1 = (.36)\left(\frac{1}{2}\right)(\rho)(V^2)(A)$$

$$D_2 = (.30)\left(\frac{1}{2}\right)(\rho)(V^2)(.9A)$$

$$\frac{D_1}{D_2} = \left(\frac{.36}{.30}\right)\left(\frac{1}{.9}\right) = 1.333$$

$$\textit{Gas Mileage} \sim (1.333)(26) = 34.7 \; mpg$$

12.78

An aquaplaning board is 2 ft long and 2 ft wide. If it is at an angle of 8° with the horizontal and has a speed of 10 mi/h, what load can it carry as a passenger? What is the drag force?

From Fig. 12.22

$$\begin{cases} C_D = .08 \\ C_L = 0.5 \end{cases}$$

$$W = C_L\left(\frac{1}{2}\right)(\rho V^2)(A) = (.5)\left(\frac{1}{2}\right)(1.938)\left(10\,\frac{5,280}{3,600}\right)^2(2)(2) = 416.9 \; lb$$

$$D = (.08)\left(\frac{1}{2}\right)(1.938)\left(10\,\frac{5,280}{3,600}\right)^2(2)(2) = 66.7 \; lb$$

If the critical Reynolds number for flow around a smooth cylinder is $6.7 \times 10^5$, what is the velocity for this condition of air at 40°C around a smooth cylinder having a diameter of 100 mm? How about water? Both are at atmospheric pressure. If the pressure is doubled for air, what is this velocity?

We look up $\nu$ for air and water.

$$\text{At} \quad p_{atm} \begin{cases} \nu_{air} = (1.95\times10^{-4})(.0929) = 1.812\times10^{-5} \ \dfrac{m^2}{s} \\ \nu_{H_2O} = .661\times10^{-6} \ \dfrac{m^2}{s} \end{cases}$$

**For air at $40°C$ and at $p = 2p_{atm}$**

$$\begin{cases} \mu_{air} = (4.3\times10^{-7})(47.9) = 2.060\times10^{-5} \ N\text{-}s/m^2 \\ [\rho_{air}]_{2\,atm} = \dfrac{(2)(101{,}325)}{(287)(273+40)} = 2.256 \ kg/m^3 \\ [\nu_{air}]_{2\,atm} = \dfrac{2.060\times10^{-5}}{2.256} = 9.131\times10^{-6} \ m^2/s \end{cases}$$

**For air and water at $p_{atm}$**

$$6.7\times10^5 = \frac{(V_{air})(.1)}{1.812\times10^{-5}} \quad \therefore \quad \boxed{V_{air} = 121.4 \ m/s}$$

$$6.7\times10^5 = \frac{(V_{H_2O})(.1)}{.661\times10^{-6}} \quad \therefore \quad \boxed{V_{H_2O} = 4.43 \ m/s}$$

**For air at $2p_{atm}$**

$$6.7\times10^5 = \frac{(V_{air})_{2p_{atm}}(.1)}{9.131\times10^{-6}} \qquad \boxed{(V_{air})_{p = 2p_{atm}} = 61.17 \ m/s}$$

http://ingesolucionarios.blogspot.com

2) $$Re_L = \frac{(998)(50)\left(\frac{1{,}000}{3{,}600}\right)(.45)}{1.005\times10^{-3}} = 6.206\times10^6$$

$$\frac{L}{e} = \frac{.45}{4.5\times10^{-5}} = 10^4$$

$\therefore$ Transition zone

$$C_f = .0041$$

$$D = \left[C_f \frac{1}{2}\rho V^2 A\right](8) = (.0041)\left(\frac{1}{2}\right)(998)\left[(50)\,\frac{1{,}000}{3{,}600}\right]^2(.45)(.8)(8) = 1.137\times10^3\ N$$

3) $$D = C_D A\,\frac{\rho V_0^2}{2} = (.38)\left(\frac{\pi 1^2}{4}\right)(998)\,\frac{\left[(50)\left(\frac{1{,}000}{3{,}600}\right)\right]^2}{2} = 2.873\times10^4\ N$$

$$Total\ Drag = 1.734\times10^4 + 1.137\times10^3 + 2.873\times10^4 = 4.719\times10^4\ N$$

$$Power = (4.719\times10^4)\,\frac{(50)(1{,}000)}{3{,}600} = 6.555\times10^5\ W =$$ **655 kW**

A torpedo is moving at a speed of 50 km/h. We want to estimate the power required in kilowatts to propel the torpedo. We do it in three steps. Proceed as follows:

1. Get skin drag over the cylindrical part of the torpedo (length 10 m). Take $e = 2 \times 10^{-3}$ m for roughness.
2. Get the skin drag of fins using an average rectangular plate for each fin. Take $e = 4.5 \times 10^{-5}$ m.
3. Get the wave drag (pressure drag) of the half sphere by considering a solid half sphere for which $C_D = 0.38$.

Now get desired power. $Re_{cr} = 500,000$.

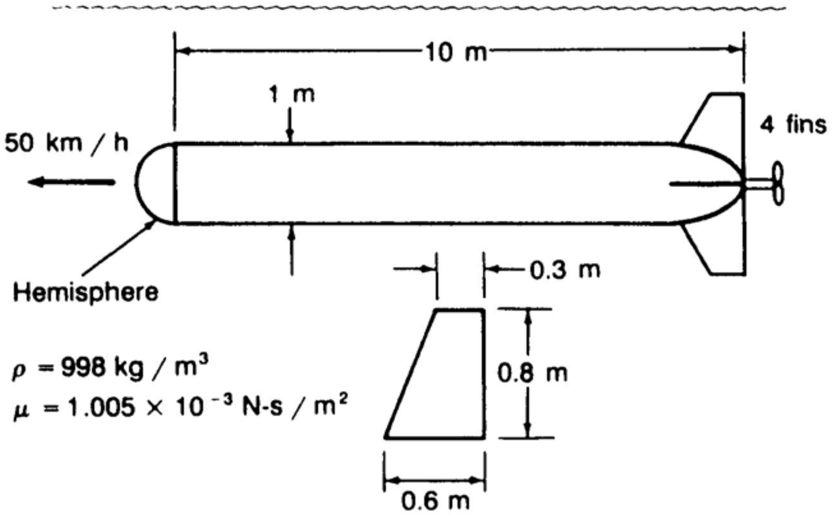


1)

$$Re_L = \frac{\rho V L}{\mu} = \frac{(998)(50)\left(\frac{1,000}{3,600}\right)(10)}{1.005\times10^{-3}} = 1.378\times10^{8}$$

$$\frac{L}{e} = \frac{10}{2\times10^{-3}} = 5,000$$

∴ Rough zone.

$$C_f = (1.89 + 1.62 \log 5,000)^{-2.5} = .00573$$

$$D = C_f \frac{1}{2}\rho V^2 A = (.00573)\left(\frac{1}{2}\right)(998)\left[50\,\frac{1,000}{3,600}\right]^2(\pi)(1)(10) = 1.734\times10^4\ N$$

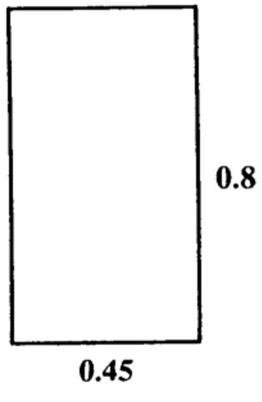

 http://ingesolucionarios.blogspot.com

A trailer truck is shown moving at a speed of 100 km/h. The truck weighs 53.5 kN. If it has a coefficient of drag of 0.60, how far will it have to go before the speed is reduced to 50 km/h. The motor is not engaged during the action. The rolling resistance of the tires is 2 kN. Air is at 15°C. *Hint*: Recall from sophomore mechanics that

$$\frac{d}{dt} = \frac{d}{dx}\frac{dx}{dt} = V\frac{d}{dx}$$

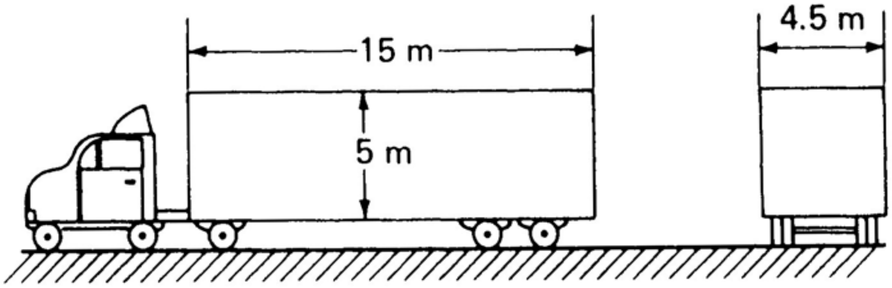


$$D = (.60)\left(\frac{1}{2}\,\rho V^2\right)(5)(4.5) + 2{,}000$$

$$\rho = \frac{101{,}325}{(287)(288)} = 1.226 \quad \frac{kg}{m^3}$$

$$M\,\frac{dV}{dt} = -[8.276V^2 + 2{,}000]$$

$$\frac{dV}{dt} = \frac{dV}{dx}\,\frac{dx}{dt} = V\,\frac{dV}{dx}$$

$$\frac{53.5\times10^3}{9.81}\,V\,\frac{dV}{dx} = -[8.276V^2 + 2{,}000]$$

$$\frac{V\,dV}{(8.276)(V^2+241.7)} = -\,\frac{9.81}{53.5\times10^3}\,dx$$

$$\frac{V\,dV}{V^2+241.7} = -1.518\times10^{-3}\,dx$$

Let $$V^2 + 241.7 = \eta$$

$$2V\,dV = d\eta \qquad\qquad dV = \frac{1}{2}\left(\frac{d\eta}{V}\right)$$

Subst.

http://ingesolucionarios.blogspot.com

$$\frac{\frac{1}{2}\,d\eta}{\eta} = -1.518\times10^{-3}\,dx$$

$$\ln\eta = -3.036\times10^{-3}x + C_1$$

$$\ln(V^2+241.7) = -3.036\times10^{-3}x + C_1$$

When $x=0$ , $V = (100)\left(\frac{1{,}000}{3{,}600}\right) = 27.8 \quad m/s$

$$\ln(27.8^2+241.7) = C_1$$

$$C_1 = \ln(1{,}013)$$

$$\therefore \quad \ln(V^2+241.7) = -3.036\times10^{-3}x + \ln(1{,}013)$$

$$\ln\left(\frac{V^2+241.7}{1{,}013}\right) = -3.036\times10^{-3}x$$

When $V = (50)\left(\frac{1{,}000}{3{,}600}\right) = 13.9$ , what is $x$ ?

$$\ln\left(\frac{13.9^2+241.7}{1{,}013}\right) = -3.036\times10^{-3}x$$

$$x = 279 \quad m$$

http://ingesolucionarios.blogspot.com
Edu_Zegarr_ch

12.82 Using Table 13.2 we see that for turbulent flow around the flagpole the drag coefficient is .3 . We work with three parts of the flagpole.

http://ingesolucionarios.blogspot.com

A flagpole is 15 m high. The lowest 5 m has a uniform diameter of 125 mm, the middle 5-m section has a uniform diameter of 90 mm, and the top section has a uniform diameter of 70 mm. If a strong wind of 50 km/ h is blowing and there is no flag, what is the bending moment at the base of the flagpole? The air is at 10°C.

$$\rho = \frac{101{,}325}{(287)(283)} = 1.248 \quad kg/m^3$$

$$D_1 = (.3)\left(\frac{1}{2}\right)(1.248)\left[50\left(\frac{1{,}000}{3{,}600}\right)\right]^2[(5)(.125)] = 22.57 \quad N$$

$$M_1 = (22.57)\left(\frac{5}{2}\right) = 56.4 \quad N\text{-}m$$

$$D_2 = (-.3)\left(\frac{1}{2}\right)(1.248)\left[50\left(\frac{1{,}000}{3{,}600}\right)\right]^2[(5)(.090)] = 16.25 \quad N$$

$$M_2 = (16.25)(7.5) = 121.9 \quad N\text{-}m$$

$$D_3 = (.3)\left(\frac{1}{2}\right)(1.248)\left[50\left(\frac{1{,}000}{3{,}600}\right)\right]^2[(5)(.070)] = 12.639$$

$$M_3 = (12.5)(12.639) = 158.0$$

$$M_{TOTAL} = 336.3 \quad N\text{-}m$$

12.83

We take the sea as turbulent flow. We get for the drag in the sea water and the above air.

In recent times, we have had disasters occurring on offshore drilling operations, such as one in the North Sea "hotel." Let us consider a hotel as shown where the above-water housing is idealized as a cylinder. In a storm, the air at 5°C is moving at 50 knots in the $y$ direction and the sea is moving at a speed of 4 knots also in the $y$ direction. Compute the total shear force at the base of the structure. Take $\rho$ of the seawater to be 1025 kg/m³. *Hint*: Because of the great height of the columns, we can assume that they are vertical without significant loss in accuracy.

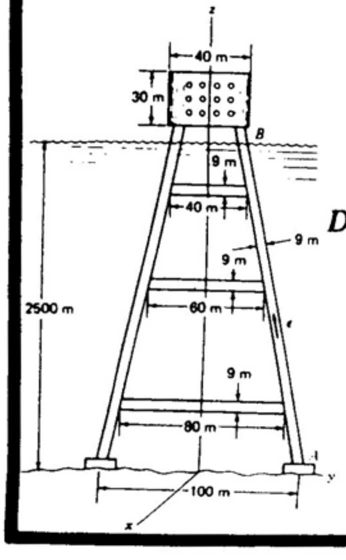


$$\rho = \frac{p}{RT} = \frac{101{,}325}{(287)(278)} = 1.270 \quad kg/m^3$$

$$D = 4\left\{(.3)\left(\frac{1}{2}\right)(1{,}025)[(4)(.5144)]^2(2{,}500)(9)\right\}$$

$$+ 2\left\{(.3)\left(\frac{1}{2}\right)(1{,}025)[(4)(.5144)]^2(40+60+80)(9)\right\}$$

$$+ (.3)\left(\frac{1}{2}\right)(1.270)[(50)(.5144)]^2[(30)(40)]$$

$$D = 6.08\times10^7 \ N = 60.8 \ MN$$

http://ingesolucionarios.blogspot.com

12.84

In Prob. 12.83 suppose that the height is only 300 m instead of 2500 m. The approximation made in the previous problem can no longer be made without some loss in accuracy. Solve for shear force. *Hint*: Get a unit vector **ε** for a column, say *AB*. The desired velocity component $V_\perp$ normal to the column is then $V\mathbf{j}\cdot(\boldsymbol{\epsilon}\times\mathbf{i})$. The drag component in the *y* direction is then the computed drag normal to the column times $(\boldsymbol{\epsilon}\times\mathbf{i})\cdot\mathbf{j}$.

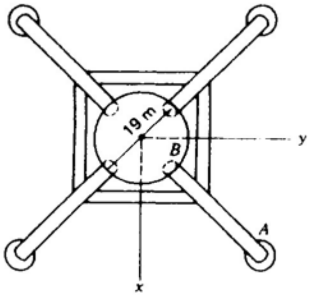


Top view showing only one side-bracing members

Consider column.

$$\vec{r}_B-\vec{r}_A = [19(.707\hat{i}+.707\hat{j})+300\hat{k}]-[50\hat{i}+50\hat{j}] = -36.6\hat{i}-36.6\hat{j}+300\hat{k} \quad m$$

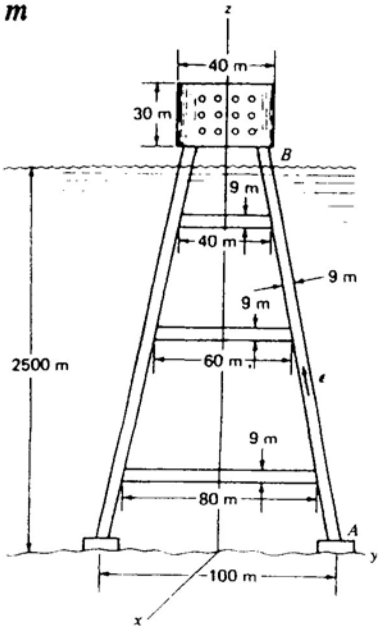


$$\hat{e} = \frac{-36.6\hat{i}-36.6\hat{j}+300\hat{k}}{\sqrt{36.6^2+36.6^2+300^2}} = -.1202\hat{i} - .1202\hat{j} + .9854\hat{k}$$

$$\hat{e}\times\hat{i} = (.1202\hat{k}+.9854\hat{j})$$

$$\hat{j}\cdot(\hat{e}\times\hat{i}) = .9854$$

$$V_\perp = (4)(.5144)(.9854) = 2.0276 \quad m/s$$

For $AB$

$$D_\perp = (.3)\left(\frac{1}{2}\right)(1,025)(2.0276)^2\left[300^2 + \left(\frac{50}{.707} - 19\right)^2\right]^{\frac{1}{2}}(9) = 1.732\times10^6 \quad N$$

$$D_y = (1.732\times10^6)(.9854) = 1.707\times10^6 \quad N$$

Hence

$$D_T = (4)(1.707\times10^6) + (2)(.3)\left(\frac{1}{2}\right)(1,025)[(4)(.5144)]^2(40+60+80)(9)$$

$$+ (.3)\left(\frac{1}{2}\right)(1.270)[(50)(.5144)]^2(30)(40)$$

$$D_T = 9.088\times10^6 \ N = 9.09 \ MN$$

http://ingesolucionarios.blogspot.com
Edu_Zegarr_ch

http://ingesolucionarios.blogspot.com

A Cottrell precipitator consists of a series of horizontal, parallel rods forming a grid. The rods are held by a horizontal circular hoop. These rods are kept at a very high voltage. Flue gases from a power plant pass through the precipitator in the chimney. The fly ash particles are given a charge and are later precipitated out by being attracted to properly charged plates. If each rod has a $\frac{1}{4}$-in diameter and are spaced 2 in apart between centerlines, what is the force on the precipitator from combustion products having a density of 0.003 slug/ft$^3$ (this density takes flue particles into account) and a speed of 30 ft/s. The flow is turbulent. There are 35 rods in the grid and the hoop has a 6-ft diameter. The center rod goes through the center of the circular hoop. (here is a good opportunity to use a programmable calculator, but it is not necessary.)

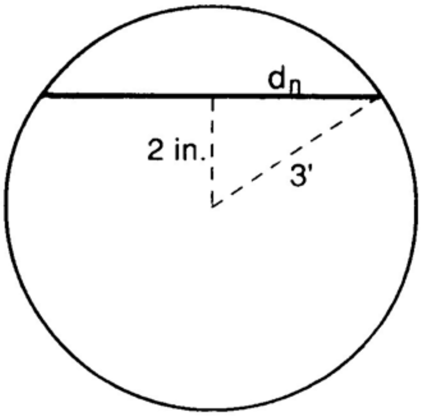


The n$^{th}$ rod has a length $2d$ equal to

$$36^2-(2n)^2 = d_n^2$$

$$d_n = \sqrt{36^2-4n^2} \quad in.$$

$$L_{TOTAL} = \left(2\sum_{n=1}^{17} 2\sqrt{36^2-4n^2}\right)+72 = 4\left[\sqrt{36^2-4} + \sqrt{36^2-16} + \sqrt{36^2-36}\right.$$

$$+ \sqrt{36^2-(4)(16)} + \sqrt{36^2-(4)(25)} + \sqrt{36^2-(4)(36)} + \sqrt{36^2-(4)(49)}$$

$$+ \sqrt{36^2-(4)(64)} + \sqrt{36^2-(4)(81)} + \sqrt{36^2-(4)(100)} + \sqrt{36^2-(4)(121)}$$

$$+ \sqrt{36^2-(4)(12)^2} + \sqrt{36^2-(4)(13^2)} + \sqrt{36^2-(4)(14)^2} + \sqrt{36^2-(4)(15^2)}$$

$$\left. + \sqrt{36^2-(4)(16^2)} + \sqrt{36^2-(4)(17^2)} \right] + 72$$

$$L_{TOTAL} = (4)(488) + 72 = 2{,}026 \ in. = 168.8 \ ft$$

$$D = (.3)\left[(168.8)\left(\frac{\frac{1}{4}}{12}\right)\right]\left(\frac{1}{2}\right)(.003)(30^2)$$

$$\boxed{D = 1.424 \quad lb}$$

http://ingesolucionarios.blogspot.com

12.86

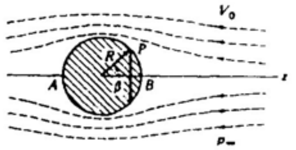


From irrotational-incompressible-flow, theory, the velocity $V_\theta$ along the surface of a sphere is

$$V_\theta = \frac{3}{2} U \sin\beta \qquad (a)$$

where $\beta$ is the angle between the radius $R$ and the $z$ axis. Show that the drag on this sphere is zero by first formulating the following equation for drag.

$$D = 2\pi R^2 \left[ p_\infty \frac{1}{2}(\sin^2\beta) + \frac{\rho U^2}{2}\frac{\sin^2\beta}{2} - \frac{9}{8}\rho U^2 \left(\frac{\sin^4\beta}{4}\right)\right]\Bigg|_0^\pi \qquad (b)$$

and then putting in the limits $\pi, 0$ for $\beta$. *Hint*: Use a strip as shown in the diagram of width $(R\,d\beta)$ and circumference $(2\pi R)\sin\beta$.

Note

$$\int \sin\beta\cos\beta\, d\beta = \frac{1}{2}\sin^2\beta$$

and $\int \sin^m\beta\cos\beta\, d\beta = \dfrac{\sin^{m+1}\beta}{m+1}$

The resulting zero drag stems from no skin friction going with zero viscosity and no pressure drag because of no separation. This was called the d'Alembert paradox in early days of fluid mechanics because everyone knew there had to be drag in real flows.

$$D = \int_0^\pi p\cos\beta(2\pi R\sin\beta)R\,d\beta$$

$$D = 2\pi R^2 \int_0^\pi p\sin\beta\cos\beta\,d\beta$$

We get $p$ using **Bernoulli**. Neglecting gravity we have for incompressible flow:

$$\frac{p_\infty}{\rho} + \frac{V_0^2}{2} = \frac{p}{\rho} + \frac{9}{8}V_0^2\sin^2\beta$$

$$\therefore \quad p = p_\infty + \frac{\rho}{2}\left[V_0^2 - \frac{9}{4}V_0^2\sin^2\beta\right]$$

$$p = p_\infty + \frac{\rho V_0^2}{2}\left(1 - \frac{9}{4}\sin^2\beta\right)$$

Substitute into Eq. (1).

$$D = 2\pi R\int_0^\pi \left[p_\infty + \frac{\rho v_0^2}{2}\left(1 - \frac{9}{4}\sin^2\beta\right)\right](\sin\beta\cos\beta)\,d\beta$$

$$D = 2\pi R^2\left\{p_\infty\int_0^\pi \sin\beta\cos\beta\,d\beta + \frac{\rho V_0^2}{2}\int_0^\pi \sin\beta\cos\beta\,d\beta - \frac{9\rho v_0^2}{8}\int_0^\pi \sin^3\beta\cos\beta\,d\beta\right\}$$

$$D = 2\pi R^2\left[p_\infty\left(\frac{1}{2}\sin^2\beta\right)\right]_0^\pi + \frac{\rho V_0^2}{2}\left(\frac{\sin^2\beta}{2}\right)_0^\pi - \frac{9\rho V_0^2}{8}\left(\frac{\sin^4\beta}{4}\right)_0^\pi$$

Clearly this result is zero.

$$\therefore \quad D = 0 \; .$$

http://ingesolucionarios.blogspot.com Edu_Zegarra 

http://ingesolucionarios.blogspot.com

In Table 12.3 we listed the coefficient of drag for a solid hemisphere as 0.38. Let us assume that the flow to the right of $A - A$ (see Fig. P13.88) is essentially given by the irrotational-flow theory as presented in the previous problem *outside* the boundary layer. Compute the pressure drag on the *spherical* part of the boundary using Eq. ($b$) of Prob. 12.86 with the *proper* limits on $\beta$ for this case of $\pi/2$ and 0. At the periphery of the hemisphere we showed in Prob. 13.87 that the pressure $p$ for this hypothetical ideal flow is

$$p = p_\infty + \frac{\rho U^2}{2} - \left(\frac{9}{4}\right)\frac{\rho U^2}{2}\sin^2\beta \quad (a)$$

At the edge $B$ the pressure is computed by setting $\beta = \pi/2$. Now in the region behind the hemisphere, the pressure is the same pressure as in Eq. ($a$) with $\beta = \pi/2$ with a fraction coefficient $\eta$ multiplying the last expression. This means that only the fraction $(1 - \eta)$ of the kinetic energy at edge $B$ is recovered into pressure in the wake behind the hemisphere. We call $\eta$ a *recovery factor*. Show that the total drag $D$ is given as

$$D = (\pi R^2)\left(\frac{\rho U^2}{2}\right)\left(\frac{9}{8}\right)(2\eta - 1) \quad (b)$$

Compute recovery factor $\eta$ for $C_D = 0.38$. Comment on assumptions made that weaken your answer.

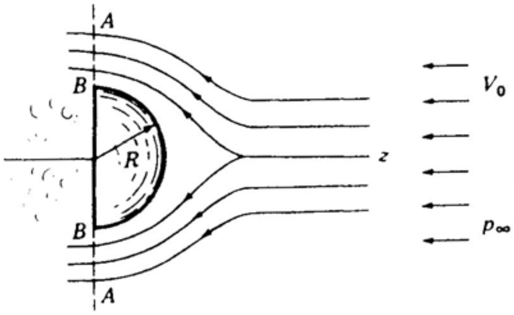


Use $\pi/2$ in Eq. (b) of Prob. 12.87 to get drag $F_1$ on the round surface.

$$F_1 = 2\pi R^2\left[\frac{p_\infty}{2} + \frac{\rho U^2}{2}\left(\frac{1}{2}\right) - \frac{9}{32}\rho U^2\right]$$

The force $F_2$ on the back face is:

$$F_2 = \pi R^2\left[p_\infty + \frac{\rho U^2}{2} - \eta\,\frac{9}{8}\,\rho U^2\right]$$

The drag $D$ is then:

$$D = F_1 - F_2$$

$$D = (\pi R^2)(\rho U^2)\left[-\frac{9}{16} - \left(-\eta\,\frac{9}{8}\right)\right] = \pi R^2\left(\frac{\rho U^2}{2}\right)\left[\frac{9}{4}\eta - \frac{9}{8}\right]$$

$$D = \pi R^2\left(\frac{\rho U^2}{2}\right)\left(\frac{9}{8}\right)[2\eta - 1]$$

$$C_D = \frac{\dfrac{D}{A}}{\dfrac{1}{2}\rho U^2} = \frac{\pi R^2\,\dfrac{\rho U^2}{2}\,\dfrac{9}{8}\,(2\eta - 1)}{(\pi R^2)\left(\dfrac{1}{2}\rho U^2\right)}$$

$$C_D = \left(\frac{9}{8}\right)(2\eta - 1)$$

For $C_D = .38$ find $\eta$.

$$.38 = \left(\frac{9}{8}\right)(2\eta - 1)$$

$$\boxed{\eta = .669}$$

 http://ingesolucionarios.blogspot.com

First **skin drag**. Assume that we have a laminar boundary layer.

$$C_f = \frac{1.328}{\sqrt{Re_L}} = \frac{1.328}{\sqrt{(U)(.030)/1.7\times10^{-5}}} = \frac{3.16\times10^{-2}}{\sqrt{U}}$$

$$D_1 = (C_f)\left(\frac{1}{2}\rho U^2\right)(A) = \frac{3.16\times10^{-2}}{\sqrt{U}}\left(\frac{1}{2}\right)(\rho)(U^2)(\pi)(.008)(.030)$$

$$\rho = \frac{p}{RT} = \frac{101{,}325}{(287)(293)} = 1.205 \quad kg/m^3$$

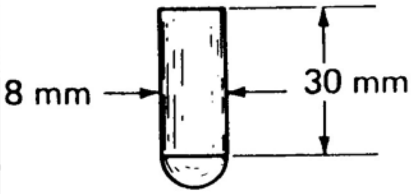


A bullet of mass 2 g has been shot into the air and is descending at its terminal speed. Estimate this speed by first computing the skin-friction drag on the cylindrical surface. Estimate the pressure drag by considering the front tip of the bullet to be a hemisphere and then use the results of Prob. 13.88 adapted to this problem with a recovery factor $\eta$ of 0.669 in the wake. The bullet is near the earth's surface. The temperature of the air is 20°C. Transition in the boundary layer is at $Re_{cr} = 10^5$.

$$\therefore \quad D_1 = 1.435\times10^{-5}U^{\frac{3}{2}} \;\; N$$

For the pressure drag:

$$D_2 = (\pi)(R^2)\frac{\rho U^2}{2}\left(\frac{9}{8}\right)(2\eta-1) = (\pi)(.004)^2\left(\frac{1.205}{2}\right)(U^2)\left(\frac{9}{8}\right)[(2)(.669)-1]$$

$$D_2 = 1.152\times10^{-5}U^2 \quad N$$

$$D_{TOTAL} = [1.435U^{\frac{3}{2}} + 1.152U^2]\times10^{-5}$$

For terminal speed:

$$gM = D_{TOTAL}$$

$$\frac{2}{1{,}000}(9.81) = \left[1.435U^{\frac{3}{2}} + 1.152U^2\right]\times10^5$$

$$\therefore \quad 1.435U^{\frac{3}{2}} + 11.52U^2 = 1{,}962$$

Solve by trial and error:

http://ingesolucionarios.blogspot.com Edu_Zegarr_ch 

http://ingesolucionarios.blogspot.com

(cont.) $U = 37.7 \quad m/sec$

Check to see if we have a laminar boundary layer.

$$Re_L = \frac{(37.7)(.030)}{1.7\times10^{-5}} = 6.65\times10^4$$

Assumption is OK.

12.89

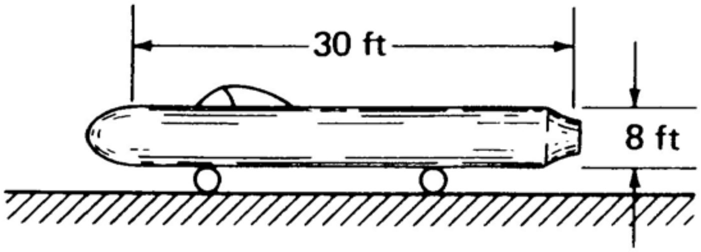


Recently a jet-driven vehicle broke the sound barrier, achieving a world record for land vehicles. An idealization of the general shape is shown. If the vehicle is coasting at 400 mi/h, what is the estimated drag? *Hint:* See Prob. 13.88 and consider the drag due to the skin friction on the cylindrical surface of the vehicle plus the pressure drag of a hemisphere as developed in Prob. 12.82 Consider the surface to be smooth. The air is at 90° F on the Utah Salt Flats. Take the recovery factor $\eta = 0.669$. Transition occurs at $Re_{cr} = 500{,}000$.

From cylindrical surface:

$$D = C_f\left(\frac{1}{2}\rho U^2\right)(A) \quad ; \quad U = (400)\left(\frac{5{,}280}{3{,}600}\right) = 587 \quad ft/s$$

$$\rho = \frac{p}{RT} = \frac{(14.7)(144)}{(53.3)(g)(550)} = .002243 \quad \frac{slug}{ft^3}$$

$$Re = \frac{(587)(30)}{1.95\times10^{-4}} = 9.026\times10^7$$

$$\therefore \quad C_f = \frac{.455}{(\log 9.026\times10^7)^{2.58}} - \frac{1{,}700}{9.026\times10^7} = .002140$$

$$D_1 = (.002140)\left(\frac{1}{2}\right)(.002243)(587^2)(\pi)(8)(30) = 622.8 \quad lb$$

Now go estimate the pressure drag we have from Eq. (b) of Prob. 12.87

$$D_2 = (\pi)(4^2)\,\frac{(.002243)(587)^2}{2}\,\frac{9}{8}\,[(2)(.669)-1] = 7{,}379 \quad lb$$

Total drag is **8,041 *lb*** .


http://ingesolucionarios.blogspot.com Edu_Zegarr_ch

http://ingesolucionarios.blogspot.com

**If the Mustang fighter plane weighs 42.7 kN, at what angle of attack should it be flown at a speed of 250 km/h? The planform area is 25 m². What power is required in horsepower to overcome wing drag? The temperature is 20°C. The flaps are at zero degrees.**

$$42{,}700 = (C_L)\left(\frac{1}{2}\right)(\rho)\left(\frac{250}{3.6}\right)^2(25)$$

$$\rho = \frac{101{,}325}{(287)(293)} = 1.205 \quad kg/m^3$$

$$\therefore \begin{cases} C_L = .588 \\ \alpha = 6^\circ \\ C_D = .04 \end{cases}$$

$$D = (.04)\left(\frac{1}{2}\right)(1.205)\left(\frac{250}{3.6}\right)^2(25) = 2{,}906 \quad N$$

$$POWER = (2{,}906)\left(\frac{250}{3.6}\right) = 201{,}776 \ \ watts = 202 \ \ kW$$

$$POWER = \frac{202}{.7457} = 271 \ \ HP$$

http://ingesolucionarios.blogspot.com
Edu_Zegarr_ch

12.91 http://ingesolucionarios.blogspot.com The stall speed occurs at the condition of $(C_L)_{max}$ which for us is 1.64 . Using Eq. (12.91) for $V_{stall}$ we get

If the takeoff speed is about 1.3 times the stall speed for the Mustang, which weighs 42.7 kN, what is the takeoff distance for a constant thrust of 9 kN and a rolling resistance of 0.5 kN? The planform area is 25 m². The flaps are at 40°. The air is at 20° C. The overall coefficient of drag for the plane is 0.20 and the frontal area is 15 m².

$$V_{stall} = \sqrt{\frac{(2)(W)}{(\rho)(C_L)_{max}A}}$$

$$\rho = \frac{101{,}325}{(287)(293)} = 1.205 \quad kg/m^3$$

$$V_{stall} = \sqrt{\frac{(2)(42{,}700)}{(1.205)(1.64)(25)}} = 41.6 \quad \frac{m}{sec}$$

$\therefore$ $V$ at takeoff is $(1.3)(41.6) = 54.05 \quad m/\text{sec}$ .

**Newton's Law** next.

$$9{,}000 - 500 - (.2)\left(\frac{\rho V^2}{2}\right)(15) = \left(\frac{42{,}700}{g}\right)V\frac{dV}{dx}$$

$$8{,}500 - 1.808V^2 = 4{,}353\ V\frac{dV}{dx}$$

$$\frac{(4{,}353)(V\,dV)}{8{,}500 - 1.808V^2} = dx$$

Let
$$8{,}500 - 1.808V^2 = \eta$$

$$\therefore \quad -3.62V\,dV = d\eta \qquad\qquad V\,dV = -\frac{d\eta}{3.62}$$

$$\int_{8{,}500}^{3{,}218} (4{,}353)\frac{\left(\frac{-d\eta}{3.62}\right)}{\eta} = \int_0^{L_1} dx - \frac{4{,}353}{3.62}\ln\eta\Big|_{8{,}500}^{3{,}218} = L$$

$$-\frac{4{,}353}{3.62}(\ln 3{,}218 - \ln 8{,}500) = L$$

$$\boxed{L = 1{,}169 \quad m}$$



http://ingesolucionarios.blogspot.com Edu_Zegarr_ch

 http://ingesolucionarios.blogspot.com

What weight can the Mustang plane have if it has a planform wing area of 233 ft$^2$ and is flying at an angle of attack of 3° at a speed of 210 mi/h? Air is at 60° F. What power is needed for overcoming wing drag at this speed? The flaps are at zero degrees.

$$C_L = .35$$

$$L = W = (.35)\left(\frac{1}{2}\right)(\rho)(U^2)(A)$$

$$\rho = \frac{(14.7)(144)}{(53.3)(g)(520)} = .00237 \quad slug/ft^3$$

$$W = (.35)\left(\frac{1}{2}\right)(.00237)\left[(210)\ \frac{5{,}280}{3{,}600}\right]^2(233) = 9{,}167\ \ lb = 4.588\ \ ton$$

$$POWER = \frac{(D)(V)}{550}$$

$$D = (.020)\left(\frac{1}{2}\right)(.00237)\left[(210)\left(\frac{5{,}280}{3{,}600}\right)\right]^2(233) = 523.3\ \ lb$$

$$POWER = \frac{(523.3)(210)\left(\frac{5{,}280}{3{,}600}\right)}{550} = 294\ \ HP$$

$$\boxed{POWER = 294 \quad HP}$$

 http://ingesolucionarios.blogspot.com

A boat is fitted with hydrofoils having a total planform area of 1 m². The coefficient of lift is 1.5 when the boat is moving at 10 knots, which is the slowest speed for the hydrofoils to support the boat. The coefficient drag is 0.6 for this case. What is the maximum weight of the boat to fulfill the minimal speed for hydrofoil support? What power is needed for this speed? Water is fresh water at 5° C.

$$C_L = 1.5$$

$$W = (1.5)\left(\frac{1}{2}\right)(\rho)(U^2)(1)$$

$$W = (1.5)\left(\frac{1}{2}\right)(1{,}000)[(10)(.5144)]^2(1)$$

$$W = 19{,}846 \ N = 19.846 \ kN$$

$$POWER = (.6)\left(\frac{1}{2}\right)(1{,}000)[(10)(.5144)]^2(1)[(10)(.5144)] = 40{,}834 \quad \frac{N\text{-}m}{sec}$$

$$\boxed{POWER = 40.8 \quad kW}$$

http://ingesolucionarios.blogspot.com. Edu_Zegarr_ch 

 http://ingesolucionarios.blogspot.com

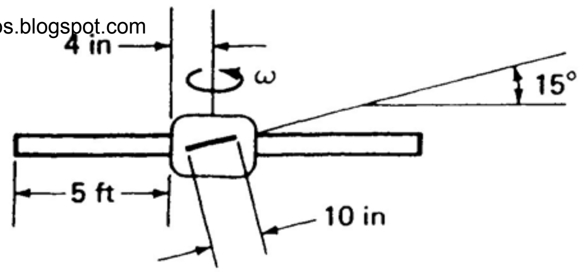


A fan used at the turn of the century and in some ice cream parlors and homes today consists of flat wooden slats rotated at a small inclination of about 15°. At what speed ω would you have to rotate the fan (with four blades) to result in zero vertical force on the bearings supporting the wooden blades each of which weighs 1.5 lb? What torque is needed for this motion? *Hint:* Use Fig. 12.22. Air is at 60° F.

From Fig. 12.22 we get the following results for $C_D$ and $C_L$ .

$$C_D = .225$$

$$C_L = .79$$

Consider one blade. Compute the lift

$$L = (.79)\int_{.333}^{5.333}\left(\frac{1}{2}\rho U^2\right)\left(\frac{10\,dr}{12}\right)$$

$$\rho = \frac{(14.7)(144)}{(53.3)(g)(520)} = .002372 \quad slug/ft^3$$

$$L = 1.5 = (.79)\left(\frac{1}{2}\right)(.002372)\left(\frac{10}{12}\right)\int_{.333}^{5.333}(r\omega)^2 dr$$

$$1.5 = (.000781)\omega^2\left.\frac{r^3}{3}\right|_{.333}^{5.333} = .000260\omega^2[5.333^3 - .333^3]$$

$$\omega = 6.168 \quad rad/\text{sec} = 58.9 \quad RPM$$

$$TORQUE = \left\{(.225)\int_{.333}^{5.333}\frac{1}{2}\rho V^2(dr)\left(\frac{10}{12}\right)r\right\}4$$

$$= (.255)\left(\frac{1}{2}\right)(.002372)(6.168)^2\left(\frac{10}{12}\right)(4)\int_{.333}^{5.333} r^3\,dr$$

$$= 0.3384\left.\frac{r^4}{4}\right|_{.333}^{5.333} = 6.84 \;\; N\text{-}m$$


http://ingesolucionarios.blogspot.com Edu_Zegarr_ch

http://ingesolucionarios.blogspot.com

# CHAPTER 13

http://ingesolucionarios.blogspot.com
Edu_Zegarr_ch

http://ingesolucionarios.blogspot.com

13.1

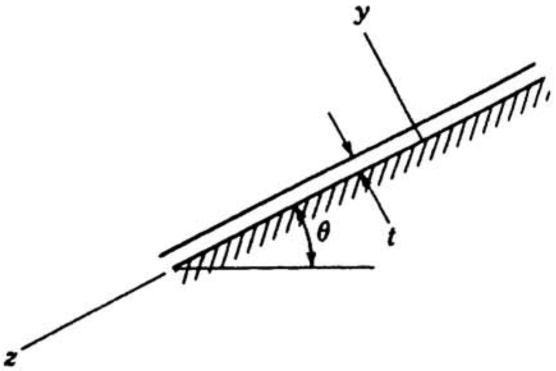


We found that for steady laminar flow in a thin sheet over a flat surface

$$V_z = \frac{\gamma \sin\theta}{\mu}\left[\left(\frac{3q\mu}{\gamma \sin\theta}\right)^{1/3} y - \frac{y^2}{2}\right] \quad (a)$$

where $q$ is the volumetric flow per unit width. What is the thickness $t$ of such a flow of water at 5°C for $\theta = 20°$? The volumetric flow $q$ is $3 \times 10^{-4}$ m²/s. *Hint*: Since $\tau_{yz}$ is zero at $y = t$, what can you conclude about $dV_z/dy$ at $y = t$?

When $y = t \quad , \quad \frac{dV_z}{dy} = 0$

$$0 = \frac{\gamma \sin\theta}{\mu}\left[\left(\frac{3q\mu}{\gamma \sin\theta}\right)^{\frac{1}{3}} - t\right]$$

$$t = \left(\frac{3q\mu}{\gamma \sin\theta}\right)^{\frac{1}{3}} = \left[\frac{(3)(3\times10^{-4})(1.519\times10^{-3})}{(9{,}806)(\sin 20°)}\right]^{\frac{1}{3}} = .7415 \ mm$$

13.2

A film of oil of thickness $t = 0.002$ ft moves at uniform speed down at inclined surface having an angle $\theta = 30°$. What is the surface velocity of the film if $\mu = 3 \times 10^{-4}$ lb · s/ft² and $\gamma$ is 57 lb/ft³? *Hint*: In the previous problem, we found that

$$t = \left(\frac{3q\mu}{\gamma \sin\theta}\right)^{1/3} \quad (a)$$

Also, see Prob. 14.1. What is the volume flow $q$ per unit width?

Set $y = t$ and solve for $V_z$ .

$$V_z = \frac{\gamma \sin\theta}{\mu}\left[t^2 - \frac{t^2}{2}\right]$$

$$V_z = \frac{(57)\sin 30°}{3\times10^{-4}}\left[\frac{(.002)^2}{2}\right] = .1900 \ ft/\text{sec}$$

To get the volumetric flow $q$ , we use Eq. (a).

$$t = .002 = \left[\frac{(3q)(3\times10^{-4})}{(57)(.500)}\right]^{\frac{1}{3}} = 2.53\times10^{-4} \ ft^2/s$$

http://ingesolucionarios.blogspot.com Edu_Zegarr_ch

13.3

In Prob. 13.1 compute a Reynolds number given as $Re = (V_{av}t)/\nu$. We note that if this Reynolds number is larger than 500, we have turbulent flow rather than laminar flow. Is our laminar flow assumption valid? What is the limiting volumetric flow in Prob. 13.1 wherein the laminar flow assumption is valid? What is the film thickness for this case? Note that $V_{av}t = q$. Also, note result in Prob. 13.2. The thickness $t$ from Prob. 14.1 is $0.7415 \times 10^{-3}$ m.

$$V_{av} = \frac{q}{t} = \frac{3\times10^{-4}\ m^2/s}{.7415\times10^{-3}\ m} = .4046\ m/s$$

$$Re = \frac{V_{av}t}{\nu} = \frac{(3\times10^{-4}\ m^2/s)}{(1.519\times10^{-6}\ m^2/s)} = 197.5$$

Laminar flow assumption is OK.

$$500 = \frac{q_{\text{lim}}}{1.519\times10^{-6}\ m^2/s}$$

$$q_{\text{lim}} = 7.595\times10^{-4}\ m^2/s$$

$$t = \left(\frac{3q\mu}{\gamma \sin 20}\right)^{\frac{1}{3}} = \left[\frac{3(7.595\times10^{-4}\ m^2/s)(1.519\times10^{-3}\ N\text{-}s/m^2)}{(9{,}806\ N/m^3)(\sin 20^\circ)}\right]^{\frac{1}{3}}$$

$$\therefore\ t = 1.010\ mm$$

http://ingesolucionarios.blogspot.com

13.4

What is the hydraulic diameter for a circular sector of radius $R$ and angle $2\alpha$ degrees?

$$D_H = \frac{4A}{P} = \frac{(4)\left(\frac{2\alpha}{360}\right)(\pi R^2)}{(R)\left(\frac{2\alpha}{360}\right)(2\pi) + 2R}$$

$$= \frac{\frac{8}{360}\pi\alpha R^2}{\frac{4\alpha\pi}{360}R + 2R} = \frac{\frac{\pi\alpha R}{90}}{\frac{2\pi\alpha}{360} + 1} = \frac{4\pi\alpha R}{2\pi\alpha + 360}$$

$$D_H = \frac{2\pi\alpha R}{\pi\alpha + 180}$$

13.5

What is the hydraulic diameter of a right triangle shown?

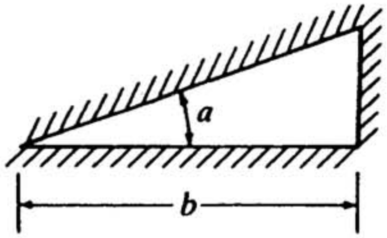


$$D_H = \frac{4A}{P_w} = \frac{(4)\left(\frac{1}{2}\right)(b)(b)(\tan\alpha)}{b + b\tan\alpha + \frac{b}{\cos\alpha}}$$

$$= \frac{2b\frac{\sin\alpha}{\cos\alpha}}{1 + \frac{\sin\alpha}{\cos\alpha} + \frac{1}{\cos\alpha}} = \frac{2b\sin\alpha}{\cos\alpha + \sin\alpha + 1}$$

$$D_H = \frac{2b\sin\alpha}{1 + \sin\alpha + \cos\alpha}$$

13.6

A channel is made of a circular boundary and a vertical side. What is the hydraulic diame-

$$D_H = \frac{4A}{P} = 4\left\{\frac{1}{2}R^2\left(\alpha - \frac{\sin 2\alpha}{2}\right) / (h + R\alpha)\right\}$$

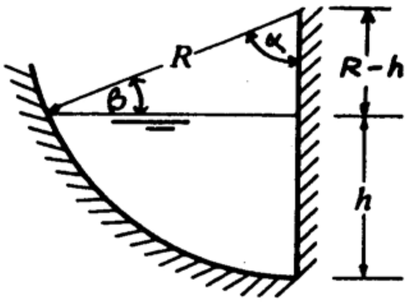


$$\alpha = \cos^{-1}\left(\frac{R-h}{R}\right)$$

$$2\alpha = 2\cos^{-1}\frac{R-h}{R}$$

$$\sin 2\alpha = \sin\left[2\cos^{-1}\frac{R-h}{R}\right] = 2\sin\left[\cos^{-1}\frac{R-h}{R}\right]\left(\frac{R-h}{R}\right)$$

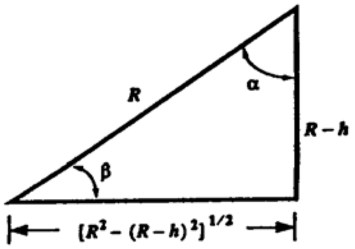


$$[R^2 - (R-h)^2]^{\frac{1}{2}}$$

$$\sin 2\alpha = 2\,\frac{[R^2 - (R-h)^2]^{\frac{1}{2}}}{R}\left(\frac{R-h}{R}\right)$$

$$\therefore \quad D_H = 2R^2\left[\cos^{-1}\left(\frac{R-h}{R}\right) - \frac{[R^2 - (R-h)^2]^{\frac{1}{2}}}{R}\;\frac{R-h}{R}\right](h + R\alpha)^{-1}$$

$$\therefore \quad \boxed{D_H = 2\,\frac{R^2\cos^{-1}\left(\frac{R-h}{R}\right) - (R-h)[R^2-(R-h)^2]^{\frac{1}{2}}}{h + R\cos^{-1}\left(\frac{R-h}{R}\right)}}$$

http://ingesolucionarios.blogspot.com

13.7

Water at 5°C is flowing in a finished cement rectangular channel of width 10 m with a slope $S_0$ of 0.001. The height of the water normal to the bed is constant, having the value of 1 m. What is the volume of flow $Q$ for normal flow?

The hydraulic radius $R_H$ is:

$$R_H = \frac{A}{P} = \frac{(10)(1)}{2+10} = .833\ m$$

The value of Manning's $n$ is .012 . We now use Eq. (14.11) for $Q$ .

$$Q = \frac{\kappa}{n}(R_H)^{\frac{2}{3}}\sqrt{S_0}\,A = \frac{1}{.012}(.833)^{\frac{2}{3}}\sqrt{.001}\,(10)(1)$$

$$Q = 23.3\ m^3/\text{sec}$$

13.8

A wide rectangular channel dug from clean earth is to conduct a flow $q$ of 5 $m^3/s$ per meter of width. The slope of the bed is 0.0015. What would be the depth of flow for normal flow?

We may compute $y_N$ by employing Eq. (13.13). Thus:

$$y_N = \left[\frac{nq}{\kappa\sqrt{S_0}}\right]^{\frac{3}{5}} = \left[\frac{(.025)(5)}{(1)(\sqrt{.0015}}\right]^{\frac{3}{5}} = 2.02\ m$$

http://ingesolucionarios.blogspot.com

13.9

**A triangular channel is made of corrugated steel and conducts 10 ft³/s at an elevation of 1000 ft to an elevation of 990 ft. What length $L$ should the channel be for normal flow? The depth $y$ is 2 ft.**

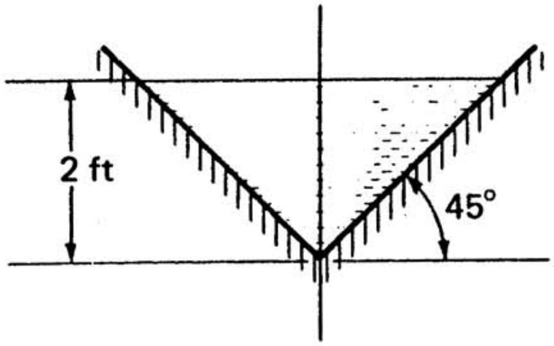


$$R_H = \frac{\left(\frac{1}{2}\right)(2)(2)(2)}{(2)\left(\frac{2}{.707}\right)} = .707\ ft$$

Using Eq. (13.10),

$$V = \frac{Q}{A} = \frac{1.486}{.022}(.707)^{\frac{2}{3}}\sqrt{S_0}$$

$$\frac{10}{\left(\frac{1}{2}\right)(2)(2)(2)} = \frac{1.486}{.022}(.707)^{\frac{2}{3}}\sqrt{S_0}$$

$$S_0 = .002175$$

$$\therefore \quad \frac{10}{L} = .002175$$

$$L = 4{,}598\ ft$$

http://ingesolucionarios.blogspot.com

13.10

What is the depth of normal flow and slope $S_0$ of a rectangular channel to conduct 5 $m^3/s$ of water a distance of 2000 m with a head loss $H_l$ of 15 m? The width of the channel is 2 m. The channel is made of brickwork.

Go to Eq. (13 15). We can solve for $S_0$ .

$$H_l = 15 = (S_0)(2{,}000)$$

$$S_0 = .0075$$

$$R_H = \frac{(2)(y)}{2y+2} = \frac{y}{y+1}$$

Now go to Eq. (13 10).

$$V = \frac{Q}{A} = \frac{5}{2y_N} = \frac{1}{.016}\left(\frac{y_N}{y_N+1}\right)^{\frac{2}{3}}(\sqrt{0.0075})$$

$$.4619 = y_N\left(\frac{y_N}{y_N+1}\right)^{\frac{2}{3}} = y_N\left(\frac{1}{1+y_N^{-1}}\right)^{\frac{2}{3}}$$

Solve by trial and error.

$$y_N = .795\ m$$

http://ingesolucionarios.blogspot.com Edu_Zegarr_ch

13.11

An asphalt-lined channel has a slope $S_0$ of 0.0017. The flow of water in the channel is 50 $m^3/s$. What is the normal depth?

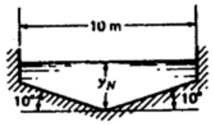


We first compute the hydraulic radius $R_H$ .

$$R_H = \frac{(y_N - 5\tan 10°)10 + (2)\left(\frac{1}{2}\right)(5)(5\tan 10°)}{2(y_N - 5\tan 10°) + (2)\dfrac{5}{\cos 10°}}$$

$$R_H = \frac{(y_n - .882)(10) + 4.408}{2[y_N - .882) + 5.007]}$$

From Table 14.1 we have for $n$ the value of .016 . Now go to Eq. (1 .11).

$$Q = 50 = \frac{\kappa}{n} R_H^{\frac{2}{3}} \sqrt{S_0}\, A$$

$$50 = \frac{1}{.016}\left[\frac{(y_N - .882)(10) + 4.408}{2[(y_N - .882) + 5.007]}\right]^{\frac{2}{3}} \sqrt{.0017}\, [(y_N - .882)(10) + 4.408]$$

$$50 = \frac{1}{.016}\,\frac{\sqrt{.0017}}{2^{\frac{2}{3}}}\,\frac{[(y_N - .882)(10) + 4.40]^{\frac{5}{3}}}{[(y_N - .882) + 5.007]^{\frac{2}{3}}}$$

Let $(y_N - .882) = x$ . We have:

$$30.81 = \frac{[10x + 4.40]^{\frac{5}{3}}}{(x + 5.077)^{\frac{2}{3}}}$$

Solve by trial and error.

$$x = 1.190$$

$$\therefore\ y_N - .882 = 1.190$$

$$y_N = 2.07\ m$$

13.12

Civil engineers frequently encounter flow in pipes wherein the pipe is not full of water. This occurs in sewers, for example, and the flow is then a free-surface flow. Shown is a partially filled pipe discharging 10 ft³/s. If Manning's $n$ is 0.015, what slope is necessary for a normal flow of 50 ft³/s?

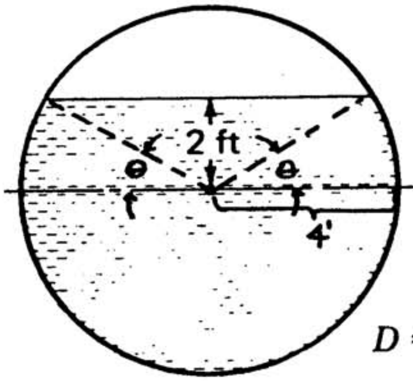


$$R_H = \frac{\left(\frac{180+2\theta}{360}\right)\left[\frac{(\pi)(8^2)}{4}\right] + \left[\left(\frac{1}{2}\right)(2)(4\cos\theta)\right]2}{\left[\frac{180+2\theta}{360}\right](\pi 8)}$$

$$\theta = \sin^{-1}\left(\frac{2}{4}\right) = 30° \qquad \therefore \quad R_H = 2.4135\ ft$$

$$V = \frac{Q}{A} = \frac{1.486}{.015}(2.413)^{\frac{2}{3}}\sqrt{S_0}\left(\frac{50}{\left(\frac{180+60}{360}\right)\left(\frac{\pi 8^2}{4}\right) + \left(\frac{1}{2}\right)(2)(4)(.886)(2)}\right)$$

$$= \frac{1.486}{.015}(2.413)^{\frac{2}{3}}\sqrt{S_0}$$

$$S_0 = .0000481$$

http://ingesolucionarios.blogspot.com

13.13

What is the flow when the level of flow has gone above the main channel and extends into the floodways on both sides? The slope of the channel is 0.0007 and the surface is that of clean excavated earth. The slope on all the inclined sides is 45°.

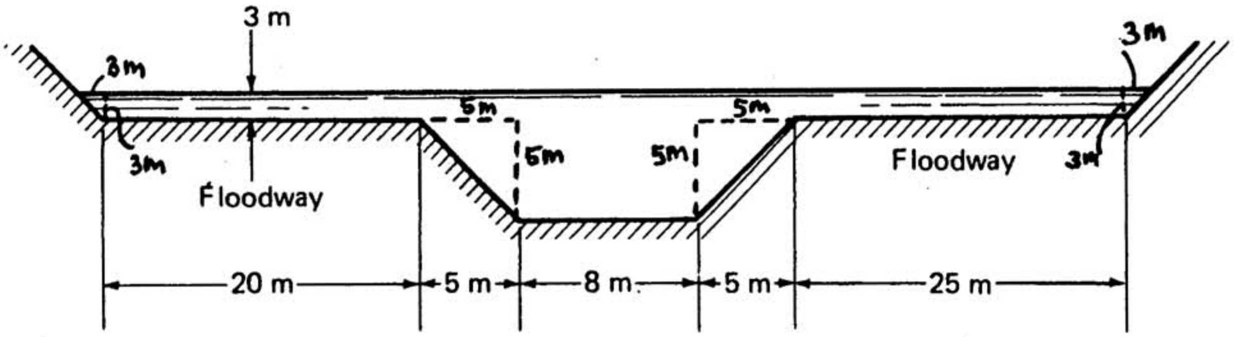


$$R_H = \left[\left(\frac{1}{2}\right)(3)(3)+(20+5+8+5+25)(3)+\left(\frac{1}{2}\right)(3)(3)+\left(\frac{1}{2}\right)(5)(5)+(8)(5)+\left(\frac{1}{2}\right)(5)(5)\right]$$

$$\left[\frac{3}{.707}+20+\frac{5}{.707}+8+\frac{5}{.707}+25+\frac{3}{.707}\right]^{-1} = 3.4774$$

Now go to Eq. 13.10.

$$V = \frac{1}{.025}(3.4774)^{\frac{2}{3}}\sqrt{.0007} = 2.429$$

$$Q = (2.429)\left[\left(\frac{1}{2}\right)(3)(3)+(20+5+8+5+25)(3)+\left(\frac{1}{2}\right)(3)(3)+25+40\right] = \boxed{638.8\ \frac{m^3}{s}}$$

http://ingesolucionarios.blogspot.com

13.14

A rectangular asphalt channel has a slope of 0.00001 and a width of 6 m. Water flows at constant depth to the bed of 1.5 m.
(*a*) Find the friction factor *f*.
(*b*) Find the average velocity.
(*c*) Find the wall shear stress $\tau_w$.

Mannings $n = .016$ . $\therefore$ Chezy's $C$ is

$$C = \frac{1.00}{.016}(R_H)^{\frac{1}{6}}$$

$$R_H = \frac{A}{P} = \frac{(6)(1.5)}{(2)(1.5)+6} = 1$$

$$\therefore \quad C = 62.5$$

1) From Eq. (13.6)

$$\left(\frac{8g}{f}\right)^{\frac{1}{2}} = 62.5$$

$$f = \frac{8g}{(62.5)^2} = .02009$$

2) From Eq. (13.5)

$$V = \left(\frac{8g}{f}\right)^{\frac{1}{2}}(R_H \sin\alpha)^{\frac{1}{2}} = (62.4)[(1)(.00001)]^{\frac{1}{2}} = .1976 \ m/s$$

3) From Eq. (13.4)

$$\tau_W = \frac{f}{4}\rho\frac{V^2}{2} = \frac{.02009}{4}(1{,}000)\frac{.1976^2}{2} = .09805 \ Pa$$

Water is flowing uniformly in a trapezoidal channel of unfinished concrete as shown. The slope of the channel is 0.002. What is the volume flow and the wall shear stress?

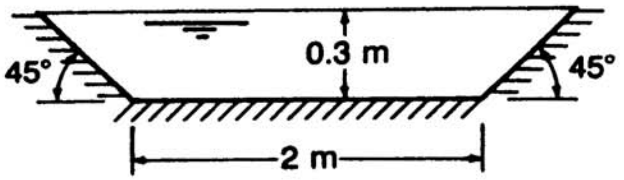


Manning's $n = .015$

$$R_H = \frac{A}{P} = \frac{(2)(.3) + (2)\left(\frac{1}{2}\right)(.3)(.3)}{2 + (2)\left(\frac{.3}{.707}\right)} = .2422$$

$$C = \frac{1}{.015}(.2422)^{\frac{1}{6}} = 52.63$$

$$\left(\frac{8g}{f}\right)^{\frac{1}{2}} = 52.63$$

$$\therefore\ f = \frac{(8)(9.81)}{52.63^2} = .02833$$

$$Q = VA = \left(\frac{8g}{f}\right)^{\frac{1}{2}}(R_H \sin\alpha)^{\frac{1}{2}}(A) = (52.63)[(.2422)(.002)]^{\frac{1}{2}}(.6 + 09) = .7993\ m^3/s$$

$$\tau_W = \frac{f}{4}\rho\frac{V^2}{2} = \frac{.02833}{8}(1{,}000)\left(\frac{.7993}{.69}\right)^2$$

$$\boxed{\tau_W = 4.752\ kPa}$$

http://ingesolucionarios.blogspot.com

13.16

Crude oil is flowing in a rectangular channel with a constant depth of 0.5 m. The width of the channel is 3 m. What is the loss in head for 3 m of length of channel? What is the energy dissipated per unit mass of flow in this distance? The channel slope is 0.003. What flow regime are we in if $e = 0.09$ mm and the oil temperature is 60°C?

a) $\Delta H_D = S_0 \Delta_x = (.003)(3) = .009 \; m$

b) $h_l = (.009)(9.81) = .08829 \; \dfrac{N\text{-}m}{kg}$

$\therefore$ Loss in energy per unit mass = $.08829 \; \dfrac{N\text{-}m}{kg}$

c) $V_* = \sqrt{(9.81)(R_H)(.003)}$

$$R_H = \frac{A}{P} = \frac{(3)(.5)}{3+1} = .375 \; m$$

$$V_* = \sqrt{(9.81)(.375)(.003)} = .1051 \; m/s$$

d) $\dfrac{eV_*}{\nu} = \dfrac{(.09\times 10^{-3})(.1051)}{(5\times 10^{-5})(.0929)} = 2.035$

Hydraulically smooth zone.

http://ingesolucionarios.blogspot.com Edu_Zegarr_ch

http://ingesolucionarios.blogspot.com

13.17

**A corrugated trapezoidal channel descends 0.2 m/km. The sides are at an angle of 45°. If a flow of 3 $m^3/s$ is desired for normal flow, what should be the width $b$ at the bottom for a water depth of 0.8 m?**

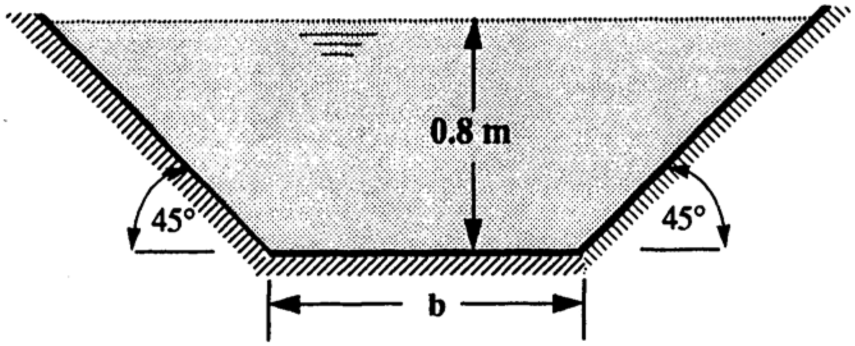


$$R_H = \frac{A}{P} = \frac{(b)(.8) + \frac{1}{2}(2)(.8)(.8)}{b + (2)\left(\frac{.8}{.707}\right)} = \frac{.8b + .64}{b + 2.263} \quad m$$

$$n = .022 \qquad \kappa = 1.000$$

$$Q = \left(\frac{\kappa}{n}\right)\left(R_H^{\frac{2}{3}}\right)\sqrt{S_0}\,A$$

$$3 = \left(\frac{1}{.022}\right)\left(\frac{.8b + .64}{b + 2.263}\right)^{\frac{2}{3}}\sqrt{\frac{.2}{1{,}000}}\,(.8b + .64)$$

$$4.667 = \frac{(.8b + .64)^{\frac{5}{3}}}{(b + 2.263)^{\frac{2}{3}}}$$

Solve by trial and error or using programmable calculator.

$$b = 6.82 \ m$$

http://ingesolucionarios.blogspot.com

13.18

What is the ratio of slopes for rectangular channels having the same flow and cross sections for asphalt lining and unfinished concrete? The flow in each case is uniform.

$$S_0 = \left(\frac{n}{\kappa}\right)^2 \left(\frac{1}{R_H^{\frac{4}{3}}}\right) \left(\frac{Q^2}{A^2}\right)$$

$$(S_0)_{ASPH} = \left(\frac{0.016}{1}\right)^2 \left(\frac{1}{R_H^{\frac{4}{3}}}\right) \left(\frac{Q^2}{A^2}\right)$$

$$(S_0)_{CONC} = \left(\frac{0.015}{1}\right)^2 \left(\frac{1}{R_H^{\frac{4}{3}}}\right) \left(\frac{Q^2}{A^2}\right)$$

$$\frac{(S_0)_{ASPH}}{(S_0)_{CONC}} = \frac{.016^2}{.015^2} = 1.1378$$

http://ingesolucionarios.blogspot.com Edu_Zegarr_ch

http://ingesolucionarios.blogspot.com

13.19

A concrete channel has a uniform flow of water of 100 ft³/s. The roughness coefficient e is 0.004 ft. The height of the free surface is 3 ft. What should be the slope $S_0$? The width of the channel is 10 ft. The water is at 60°F.

$$R_H = \frac{(10)(3)}{(10+6)} = 1.875$$

$$\frac{e}{4R_H} = \frac{.004}{(4)(1.875)} = .000533$$

$$Re_H = \frac{\left(\frac{100}{30}\right)(1.875)(4)}{1.217\times10^{-5}} = 2.054\times10^6$$

From Moody $f = .0170$ . Go to Eq. (13.16).

$$\frac{100}{30} = \left(\frac{8g\,S_0\,R_H}{f}\right)^{\frac{1}{2}} = \left[\frac{(8)(32.2)(S_0)(1.875)}{.0170}\right]^{\frac{1}{2}}$$

$$S_0 = 3.911\times10^{-4} = \boxed{.00031911}$$

http://ingesolucionarios.blogspot.com
Edu_Zegarr_ch

http://ingesolucionarios.blogspot.com

13.20

A riveted steel channel of rectangular cross section is to conduct water at 60°C along a slope of 0.0001 at the rate of 8 $m^3/s$. The roughness coefficient e is 4.4 mm. If the width of the channel is 5 m, what is the velocity of flow to be expected for uniform flow?

Go to Eq. (13.16).

$$V = \frac{Q}{A} = \frac{8}{(h)(5)} = \left[\frac{(8)(9.81)(.0001)\dfrac{5h}{(5+2h)}}{f}\right]^{\frac{1}{2}}$$

$$\therefore \quad 65.24 = \frac{h^3}{f(5+2h)}$$

Estimate $f$ to be 0.025 .

$$\therefore \; 1.631 = \frac{h^3}{(5+2h)}$$

Solve by trial and error or on a programmable calculator.

$$h = 2.54 \; m$$

Now check $f$ .

$$V = \frac{8}{(5)(2.54)} = .6299 \; m/s$$

$$Re_H = \frac{(.6299)(4)\dfrac{(2.54)(5)}{5+(2)(2.54)}}{.477\times10^{-6}} = 6.655\times10^{-6}$$

$$\frac{e}{4R_H} = \frac{.0044}{(4)\left[\dfrac{(2.54)(5)}{5+(2)(2.54)}\right]} = .000873$$

From Moody $f = .0194$ . Go to a second cycle.

$$1.266 = \frac{h^3}{5+2h}$$

http://ingesolucionarios.blogspot.com

***(cont.)***

Solve for $h$ again. $h = 2.30$

Check $f$ .

$$V = \frac{8}{(5)(2.30)} = .6957$$

$$\boxed{V = .6957\ m}$$

$$Re_H = \frac{(.6957)\left[\dfrac{(2.30)(5)}{5 + (2)(2.30)}\right](4)}{.477\times10^{-6}} = 6.989\times10^{6}$$

$$\frac{e}{4R_H} = \frac{.0044}{(4)\left[\dfrac{(2.30)(5)}{5 + (2)(2.30)}\right]} = .000918$$

From Moody $f = .0193$ . Good enough!

$$\therefore \quad \boxed{h = 2.30\ m}$$

$$\boxed{V = .6951\ m}$$

http://ingesolucionarios.blogspot.com

13.21

**We are to use a full semicircular channel for uniform flow of water at 60°F at a slope of 0.001. If we wish to have a volume of flow of 100 ft³/s, what radius should the channel be for ε = 0.015 ft?**

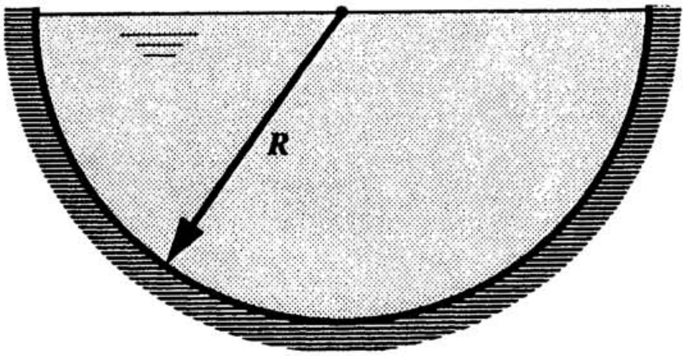


$$R_H = \frac{\frac{1}{2}\pi R^2}{\pi R} = \frac{1}{2}R$$

$$V = \frac{Q}{A} = \left[\frac{8g\,S_0\,R_H}{f}\right]^{\frac{1}{2}}$$

$$\frac{100}{\frac{\pi R^2}{2}} = \left[\frac{(8)(32.2)(.001)\,\frac{R}{2}}{f}\right]^{\frac{1}{2}}$$

$$\therefore\ 3.147\times10^4 = \frac{R^5}{f}$$

Let $f = .02$

$$R = 3.629\ m$$

Check $f$ with **Moody.**

$$Re_H = \frac{\dfrac{100}{\frac{1}{2}\pi(3.629)^2}(4)(3.629)}{1.217\times10^{-5}} = 2.883\times10^6$$

http://ingesolucionarios.blogspot.com

*(cont.)*

$$\frac{e}{4R_H} = \frac{.015}{(4)\left(\frac{1}{2}\right)3.629} = .00267$$

**Moody** $$f = .024$$

$$\therefore \quad 3.147\times10^4 = \frac{R^5}{.024}$$

$$R = 3.764 \ m$$

Check

$$Re_H = \frac{\dfrac{100}{\left(\frac{1}{2}\right)(\pi)(3.764)^2}(2)(3.764)}{1.217\times10^{-5}} = 2.78\times10^6$$

$$\frac{e}{4R_H} = \frac{0.015}{(4)\left(\frac{1}{2}\right)(3.764)} = .001993$$

$$f = .023$$

$$\therefore \quad \boxed{R = 3.732 \ m}$$

http://ingesolucionarios.blogspot.com

13.22

Compare the ratios of areas and perimeters for triangular cross sections for uniform flow of $Q = 30\ m^3/s$ and $S_0 = 0.001$ for $\alpha = 30°$ and $\alpha = 80°$. The material is asphalt with Manning's $n = 0.016$. Comment on results.

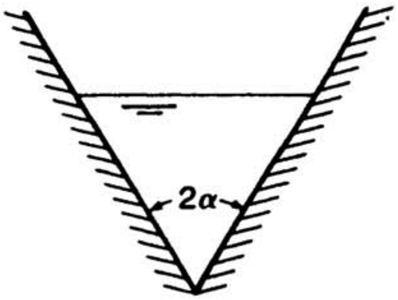


$$R_H = \frac{A}{P} = \frac{h^2 \tan\alpha}{\frac{2h}{\cos\alpha}} = \frac{h\sin\alpha}{2}$$

$$Q = \frac{\kappa}{n} R_H^{\frac{2}{3}} \sqrt{S_0}\, A = \frac{1}{.016} R_H^{\frac{2}{3}} \sqrt{.001}\,(h^2 \tan\alpha)$$

For two cases

$$\begin{cases} (R_H)_{30°} = \dfrac{h(.5)}{2} = .25h \\ (R_H)_{80°} = \dfrac{h(.985)}{2} = .4924h \end{cases}$$

For 30°

$$30 = \frac{1}{.016}(.25h)^{\frac{2}{3}} \sqrt{.001}\, h^2(.5773)$$

$$h^{\frac{8}{3}} = 66.257 \qquad h = 4.82\ m$$

For 80°

$$30 = \frac{1}{.016}(.4924h)^{\frac{2}{3}} \sqrt{.001}\, h^2(5.67)$$

$$h = 1.727\ m$$

**Area Ratios**

$$\frac{A_{80°}}{A_{30°}} = \frac{(1.727)^2(5.671)}{(4.82)^2(.577)} = \boxed{1.262}$$

$$\frac{P_{80°}}{P_{30°}} = \frac{(2)(1.7275)/.17365}{(2)(4.82)/.866} = \boxed{1.787}$$

http://ingesolucionarios.blogspot.com

http://ingesolucionarios.blogspot.com

13.23

A cast iron pipe conducts water. If $R = 3$ m, $\alpha = 60°$, and $S_0 = 0.003$, what is the volume of uniform flow?

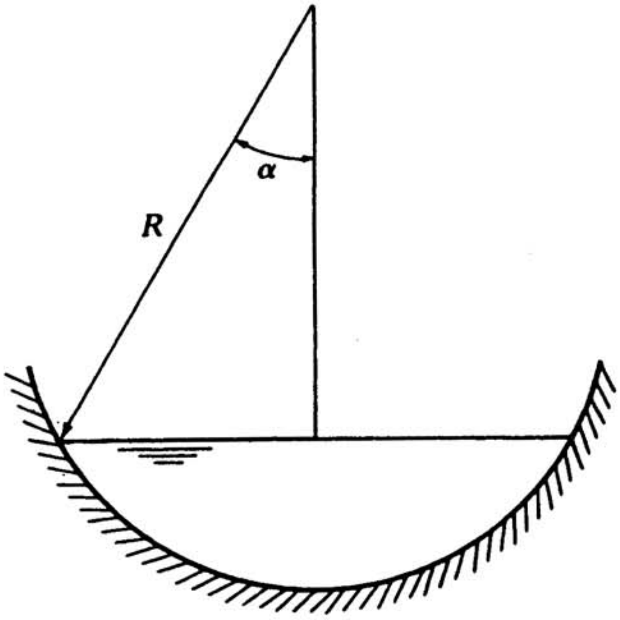


$$R_H = \frac{R^2\left(\alpha - \frac{\sin 2\alpha}{2}\right)}{2R\alpha} = \frac{R}{2}\left(1 - \frac{\sin 2\alpha}{2\alpha}\right)$$

For $R = 3\ m$ and $\alpha = 60°$

$$R_H = \frac{3}{2}\left(1 - \frac{.866}{(2)\left(\frac{\pi}{3}\right)}\right) = .8798$$

Eq. (13.10)

$$Q = \left(\frac{1}{.015}\right)(.8798)^{\frac{2}{3}}\sqrt{.003}\,(3^2)\left(\frac{\pi}{3} - \frac{.866}{2}\right)$$

$$\boxed{Q = 18.53\ m^3/s}$$

http://ingesolucionarios.blogspot.com

13.24

**Using a friction factor approach employing formulas for $f$, find the uniform flow in a semicircular channel of radius 4 m flowing full at a slope of 0.0001. The fluid is crude oil at 0°C. The channel is lined with plastic material with $e$ = 0.28 mm. Use the simplest formulas for $f$ for an approximate result. *Hint:* Use eqs. (13.20) and (13.7) in an iterative manner.**

$$R_H = \frac{A}{P} = \frac{\frac{1}{2}\pi(4^2)}{(\pi)(4)} = 2$$

Using Eq. (13.17) we have:

$$\frac{V_* e}{\nu} = \frac{\sqrt{(9.81)(2)(.0001)}\,(.00028)}{(.0929)(2\times10^{-4})} = .6675$$

∴ **Hydraulically smooth** zone.

(We have assumed turbulent flow.) Go to Eq. (14.20).

$$C = 15.76(Re_H)^{\frac{1}{8}} = 15.76\left[\frac{(V)(4)(2)}{(.0929)(2\times10^{-4})}\right]^{\frac{1}{8}} = 79.76\,V^{\frac{1}{8}}$$

Let $V = .1\ m/s$

$$\therefore\ C = 59.82$$

Go to Eq. (13.7).

$$V = (59.82)\sqrt{(2)(.0001)} = .8460\ m/s$$

Let $V = .8460\ m/s$

$$\therefore\ C = (79.76)(.8460)^{\frac{1}{8}} = 78.11$$

$$V = (78.11)\sqrt{(2)(.0001)} = 1.105\ m/s$$

Let $V = 1.105\ m/s$

http://ingesolucionarios.blogspot.com

**(cont.)**

$$C = 79.76(1.105)^{\frac{1}{8}} = 80.76\ m/s$$

$$V = (80.76)\sqrt{(2)(.0001)} = 1.142\ m/s$$

Let $V = 1.142\ m/s$

$$C = (79.76)(1.142)^{\frac{1}{8}} = 81.11$$

$$V = (81.11)\sqrt{(2)(.0001)} = 1.147\ m/s$$

Let $V = 1.147$

$$C = (79.76)(1.147)^{\frac{1}{8}} = 81.14\ m/s$$

$$V = (81.14)\sqrt{(2)(.0001)} = 1.147\ m/s$$

$$\therefore\ Q = (1.147)\frac{1}{2}\pi(4^2) = \boxed{28.84\ m^3/s}$$

http://ingesolucionarios.blogspot.com

http://ingesolucionarios.blogspot.com

13.25

Consider channel flow of water at 5°C in a channel wherein the flow cross section is that of a quarter circle. If $S_o$ = 0.0025, find $Q$ for a roughness factor of 0.7 mm. Go through two cycles of calculation. Use Moody diagram.

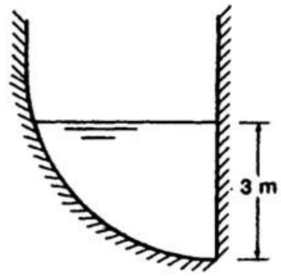


$$R_H = \frac{A}{P} = \frac{\frac{1}{4}\pi R^2}{\left(\frac{\pi}{2}R\right)+R} = \frac{\frac{\pi}{4}R}{1+\frac{\pi}{2}} = .3055\,R$$

Go to Eq. (13.16).

$$V = \left(\frac{8g\,S_0\,R_H}{f}\right)^{\frac{1}{2}} = \left[\frac{(8)(9.81)(.0025)(.3055)(3)}{f}\right]^{\frac{1}{2}}$$

Guess $f = .02$

$$\therefore\ V = 2.998\ m/s \sim 3\ m/s$$

Check $f$

$$Re_{H_D} = \frac{(3)(4)[(.3055)(3)]}{1.519\times10^{-6}} = 7.240\times10^6$$

$$\frac{e}{D_H} = \frac{.0007}{(4)(.3055)(3)} = .000191$$

Go to **Moody** $f = .0138$

Go again.

$$V = \left[\frac{(8)(9.81)(.0025)(.3055)(3)}{.0138}\right]^{\frac{1}{2}} = 3.61\ m/s$$

Check.

$$Re_{H_D} = \left[\frac{(3.61)(4)(.3055)(3)}{1.519\times10^{-6}}\right] = 8.712\times10^6$$

$$\frac{e}{D_H} = .000191$$

$f = .0138$ OK

$$\therefore\ Q = (3.61)\left(\frac{1}{4}\right)(\pi)(3^2) = \boxed{25.52\ m/s}$$

**14.26. Do Prob. 13.25 using friction factor formulas.**

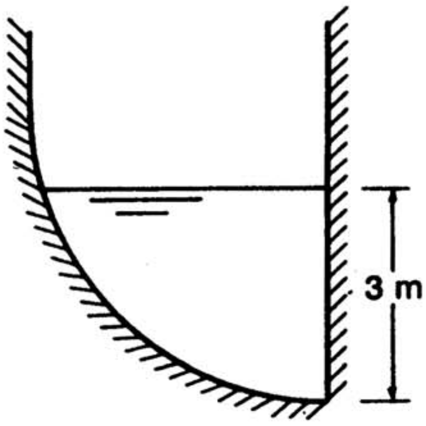


To find zone of flow, use Eq. (13.18).

$$\frac{V_* e}{\nu} = \frac{\sqrt{(g)(R_H)(S_0)}\ e}{\nu}$$

$$R_H = \frac{A}{P} = \frac{\frac{1}{4}\pi R^2}{\frac{\pi}{2}R + R} = (.3055)R = .9165\ m$$

$$\therefore \quad \frac{V_* e}{\nu} = \frac{\sqrt{(9.81)(.9165)(.0025)}\ (.0007)}{1.519\times10^{-6}} = 69.1$$

We are in the **transition flow** zone.

$$\therefore \quad C = \left\{2.16 - 2\log\left[\frac{e}{R_H} + \frac{30}{Re_H\sqrt{f}}\right]\right\}\sqrt{8g} \qquad (1)$$

$$\frac{1}{\sqrt{f}} = 2.16 - 2\log\left[\frac{e}{R_H} + \frac{30}{Re_H\sqrt{f}}\right] \qquad (2)$$

1) We may estimate $V = 4\ m/s$

$$\therefore \quad Re_H = \frac{(4)(4)(.9165)}{1.519\times10^{-6}} = 9.654\times10^6$$

http://ingesolucionarios.blogspot.com

*(cont.)*

Go to Eq. (2).

$$\frac{1}{\sqrt{f}} = 2.16 - 2\log\left[\frac{.0007}{.9165} + \frac{30}{9.654\times10^{6}\sqrt{f}}\right]$$

$$\therefore \quad \frac{1}{\sqrt{f}} = 2.16 - 2\log\left[7.638\times10^{-4} + \frac{3.108\times10^{-6}}{\sqrt{f}}\right]$$

Solve on programmable calculator or by trial and error.

$$f = .01428$$

Go to Eq. (1).

$$C = (8.365)\left(\sqrt{(8)(9.81)}\right) = 74.10$$

Go to Eq. (1· .7).

$$V = C\sqrt{R_H S_0} = (74.10)\sqrt{(.9165)(.0025)} = 3.55 \ m/s$$

2) Now use $V = 3.55\ m/s$ .

$$Re_H = \frac{(3.55)(4)(.9165)}{1.519\times10^{-6}} = 8.568\times10^{6}$$

$$\therefore \quad \frac{1}{\sqrt{f}} = 2.16 - 2\log\left[7.638\times10^{-4} + \frac{3.501\times10^{-6}}{\sqrt{f}}\right]$$

$$f = .0143$$

$$C = (8.361)\sqrt{(8)(9.81)} = 74.07$$

$$V = (74.07)\sqrt{(.9165)(.0025)} = 3.545 \ m/s$$

$$Q = (3.545)\left(\frac{1}{4}\right)(\pi)(3^2) = \boxed{25.06\,m^3/s}$$

http://ingesolucionarios.blogspot.com Edu_Zegarr_ch 

http://ingesolucionarios.blogspot.com

13.27

The channel in Example 13.1 is to be replaced by a rectangular channel of width 16 ft. What is the ratio of cost of the concrete allowing 2 ft of freeboard (distance above the free surface) for the walls for the channels?

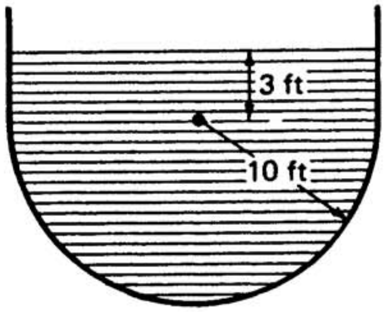


$$Q = 3{,}471 \qquad S_0 = .0016 \qquad n = .012$$

$$R_H = \frac{(16)(y)}{2y+16} = \frac{8y}{y+8}$$

$$\frac{3{,}471}{(y)(16)} = \frac{1.486}{.012}\left(\frac{8y}{y+8}\right)^{\frac{2}{3}}\sqrt{.0016}$$

$$10.95 = \left(\frac{y}{y+8}\right)^{\frac{2}{3}} y = y\left[\frac{1}{1+\frac{8}{y}}\right]^{\frac{2}{3}}$$

Solve by trial and error.

$$y = 14.63\ ft$$

$$\therefore \quad (Perimeter)_1 = (2)(14.63) + (2)(2) + 16 = 49.26\ ft$$

For Example 13.1

$$(Perimeter)_2 = \left(\frac{1}{2}\right)(\pi)(20) + (2)(3) + (2)(2) = 41.42\ ft$$

$$RATIO = \frac{49.26\ (new\ channel)}{41.42\ (old\ channel)} = \boxed{1.189}$$

Rectangular perimeter costs 1.189 times to semi-circular perimeter.

http://ingesolucionarios.blogspot.com
13.28

**Do Prob. 13.7 using the friction-factor approach. Assume rough-zone flow and check at the conclusion of the problem whether this is appropriate.**

Compute $R_H$.

$$R_H = \frac{(10)(1)}{10+2} = \frac{10}{12} = .833\ m$$

Use Eq. (14.23a)

$$\frac{1}{\sqrt{f}} = 2.16 - 2\log\left(\frac{.001}{.833}\right)$$

$$f = .01562$$

Now go to Eq. (13.16).

$$V = \left[\frac{8g(.001)(.833)}{.01562}\right]^{\frac{1}{2}} = 2.05\ m/\text{sec}$$

$$Q = (2.05)(10)(1) = 20.5\ m^3/s$$

$$Re = \frac{(2.05)\overbrace{(4)(.833)}^{D_H}}{1.519\times10^{-6}} = 4.50\times10^6$$

For $f = .01562$ and $Re = 4.50\times10^6$ we are in rough zone according to Moody's diagram.

http://ingesolucionarios.blogspot.com
Edu_Zegarr_ch

We will guess at a value $y_N$. Now we can compute $R_H$. Use the value 2.07 from previous solution.

$$R_H = \frac{(y_N - 5\tan 10°)(10) + (5)(5)\tan 10°}{2(y_N - 5\tan 10°) + 2\,\dfrac{5}{\cos 10°}} = 1.3002\ m$$

Now consider we have rough flow. Taking $e = 5.4\ mm$ we have for $f$:

$$\frac{1}{\sqrt{f}} = 2.16 - 2\log\left(\frac{e}{R_H}\right) = 2.16 - 2\log\left(\frac{5.4\times 10^{-3}}{1.3002}\right)$$

$$f = .0209$$

Do Prob. 13.11 using the friction-factor approach. *Hint*: Guess at $y_N$ and solve for $Q$. When you have a $y_N$ delivering the known flow $Q$, you have arrived at your desired result. If $y_N = 2.07$ in Prob. 14.11, what percent difference do you get? Consider the flow to be in the rough zone; then at the end check this. Water is at 10°C.

Now go to Eq. (12.16).

$$V = \left[\frac{8g(.0017)(1.3002)}{.0209}\right]^{\frac{1}{2}} = 2.881\ \frac{m}{s}$$

$$Q = (2.881)(A) = (2.881)[(2.07 - .882)(10) + (25)(\tan 10°)] = 46.9\ m^3/\text{sec}$$

We could choose a larger $y_N$. Take $y_N = 2.15\ m$

$R_H = 1.3466 \qquad f = .02069 \qquad V = 2.896 \qquad Q = 49.5\ m^3/\text{sec}$

Thus the friction approach calls for $y_N = 2.15$. The Manning formula is:

$$\frac{2.15 - 2.07}{2.07}(100) = 3.9\%\ \textit{less}$$

Check zone.

$$Re = \frac{(2.896)[(4)(1.3002)]}{1.308\times 10^{-6}} = 1.151\times 10^{7}$$

$$\frac{e}{4R_H} = \frac{5.4\times 10^{-3}}{(4)(1.3002)} = .001038$$

Clearly, **rough zone.**

http://ingesolucionarios.blogspot.com

13.30

Consider a rectangular channel lined with smooth steel where $e = 0.001$ m. The width of the channel is 1 m and the slope $S_0$ is 0.0001. What is the maximum flow $q$ to have hydraulically smooth steady flow? Water at 5°C is flowing.

Let $$\frac{V_* e}{\nu} = \frac{V_*(1\times10^{-3})}{1.519\times10^{-6}} = 4 \qquad V_* = 6.076\times10^{-3}$$

$$\therefore \quad V_* = \sqrt{gR_H S_0} = 6.076\times10^{-3}$$

$$(9.81)\left[\frac{(y)(1)}{2y+1}\right](.0001) = [6.076\times10^{-3}]^2$$

$$\frac{y}{2y+1} = .03763 \qquad y = .04069 \ m$$

$$\therefore \quad R_H = \frac{(.04069)(1)}{(2)(.04069)+1} = .03763$$

Hence

$$f = \frac{.316}{\left[\dfrac{V(4)(.03763)}{1.519\times10^{-6}}\right]^{\frac{1}{4}}} = \frac{.01781}{V^{\frac{1}{4}}}$$

From Eq. (13.16)

$$V = \left[\frac{8g(.0001)(.03763)}{f}\right]^{\frac{1}{2}}$$

$$V^2 = \left[\frac{8g(.0001)(.03763)}{\dfrac{.01781}{V^{\frac{1}{4}}}}\right]$$

$$\boxed{V = .0961 \ m/\text{sec}}$$

$$q_{\max} = (.0961)(.04069)(1) = .00391 \ m^2/\text{sec}$$

$$Re_H = \frac{(.0961)(4)(.03763)}{1.519\times10^{-6}} = 9.52\times10^3$$

Since $Re_H < 10^5$ we have used proper formula for $f$.

http://ingesolucionarios.blogspot.com

13.31

In Prob. 13.30, what is the minimum flow $q$ for rough zone of flow? Take the slope to be 0.01 for this case.

Let $$\frac{V_* e}{\nu} = 100$$

$$V_* = \frac{(100)(1.519\times10^{-6})}{1\times10^{-3}} = .1519\ m/\text{sec}$$

$$V_* = \sqrt{gR_H S_0} = .1519$$

$$9.81R_H(.01) = (.1519)^2 \qquad R_H = .2352$$

Now go to Eq. (13.23a).

$$\frac{1}{\sqrt{f}} = 2.16 - 2\log\left(\frac{1\times10^{-3}}{.2352}\right) \qquad f = .0210$$

Go to Eq. (13.16).

$$V = \left[\frac{8g(.01)(.2352)}{.0210}\right]^{\frac{1}{2}} = 2.966\ m/\text{sec}$$

$$R_H = \frac{(y)(1)}{2y+1} = .2352$$

$$y = .4441\ m$$

$$q = (2.966)[(1)(.4441)] = \boxed{1.317\ m^2/\text{sec}}$$

http://ingesolucionarios.blogspot.com

http://ingesolucionarios.blogspot.com

13.32

**Suppose in Example 13.6 that the angle $\beta$ has been specified as 50° to avoid material on the sides of the trapezoidal section from sliding down. For the best hydraulic section for this case, what is the relation between $y$ and $a$?**

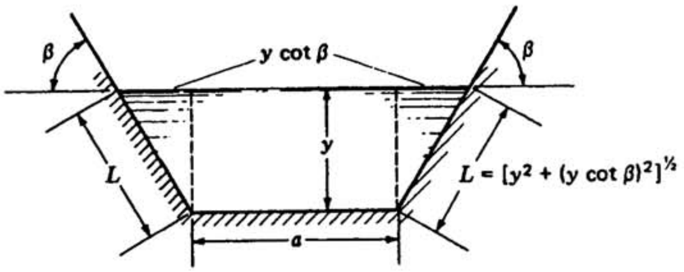


For this case $m = \cot 50° = .8391$ . Hence we go to Eq. (c) of the example now with only one variable, namely $y$ . Differentiating with respect to $y$ and setting $dP/dy = 0$ we have:

$$-P + 4y(1+m^2)^{\frac{1}{2}} - 2ym = 0$$

$$\therefore \quad -P + 4y(1+.8391^2)^{\frac{1}{2}} - (2)(.8391)y = 0$$

Replace $P$ using Eq. (b) of Ex. 13.6.

$$-[b + 2y(1+.8391^2)^{\frac{1}{2}}] + 4y(1 + .8391^2)^{\frac{1}{2}} - 2(.8391)y = 0$$

$$-b - y(2.611) + 5.222y - 1.6782y = 0$$

$$\boxed{b = .933y}$$

http://ingesolucionarios.blogspot.com

13.33

There is a steady flow at 5 $m^3/s$ at a slope of $S_0 = 0.002$. What is the proper width $b$ of a rectangular channel if we wish to minimize the wetted perimeter for the sake of economy of construction? The channel is made from unfinished concrete.

For the best section we must require that $b = 2y$ . Hence for $R_H$ we have:

$$R_H = \frac{(2y)(y)}{2y+2y} = \frac{y}{2}$$

The Manning $n$ is .015 . Hence

$$V = \frac{Q}{A} = \frac{1}{.015}\left(\frac{y}{2}\right)^{\frac{2}{3}}\sqrt{.002}$$

$$\frac{5}{(2y^2)} = \frac{1}{.015}\left(\frac{y}{2}\right)^{\frac{2}{3}}\sqrt{.002}$$

$$y = 1.1132 \ m$$

$$\therefore \quad \boxed{b = 2.226 \ m}$$

http://ingesolucionarios.blogspot.com Edu_Zegarr_ch

A trapezoidal channel is to conduct 10 $m^3/s$ of water at 5°C at a slope $S_0 = 0.003$. For the most efficient design, what is the wetted perimeter? Compare this perimeter with that of a semicircular cross section. The material for the channel is asphalt. Do not consider freeboard (channel wall above the free surface). What is the ratio of the respective perimeters? What is the ratio of the respective cross sections? Comment on the relative efficiency of the two sections.

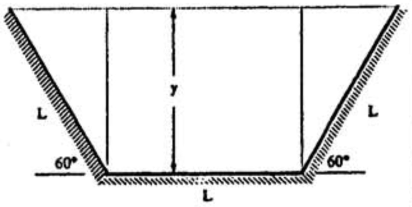


13.34 **For Hexagon**

$$R_H = \frac{A}{P} = \frac{Ly+y^2m}{3L}$$

$$\begin{cases} m = \dfrac{1}{\sqrt{3}} \\ y = \dfrac{\sqrt{3}}{2} \\ R_H = \dfrac{L^2\dfrac{\sqrt{3}}{2} + \dfrac{3}{4}L^2\dfrac{1}{\sqrt{3}}}{3L} = .433\ L \end{cases}$$

Go to Eq. (13.10).

$$10 = \frac{1}{.016}(.433L)^{\frac{2}{3}}\sqrt{.003}\left(L\frac{\sqrt{3}}{2}L + \frac{3}{4}L^2\frac{1}{\sqrt{3}}\right)$$

$$L = 1.6705\ m \qquad P_1 = 5.012\ m$$

**For Semicircle**

$$R_H = \frac{\dfrac{\pi D^2}{8}}{\dfrac{\pi D}{2}} = \frac{D}{4}$$

$$10 = \frac{1}{.016}\left(\frac{D}{4}\right)^{\frac{2}{3}}\sqrt{.003}\left(\frac{\pi D^2}{8}\right) \qquad D = 3.00\ m$$

$$P_2 = \left(\frac{1}{2}\right)(3.00)(\pi) = 4.715\ m$$

Ratio of perimeters

$$\frac{P_1}{P_2} = \frac{5.012}{4.715} = 1.0631$$

$$\frac{A_1}{A_2} = \frac{(1.6705)^2\left(\dfrac{\sqrt{3}}{2}\right) + \dfrac{3}{4}\dfrac{1}{\sqrt{3}}(1.6705)^2}{\dfrac{1}{8}\pi(3.00)^2} = \boxed{1.0257}$$

The cross-sections are close to having the same efficiency.

http://ingesolucionarios.blogspot.com

13.35 **For rectangular section,** using the result of Example 13.5, we have:

**A rectangular channel with a slope $S_0 = 0.002$ is to conduct 60 ft$^3$/s of water at $T = 60°F$. What is the perimeter ratio of the most efficient design with that of a trapezoidal section also of the most efficient design for the same $Q$ and $S_0$? The material is concrete ($n = 0.017$). Use results of Examples 13.5 and 13.6.**

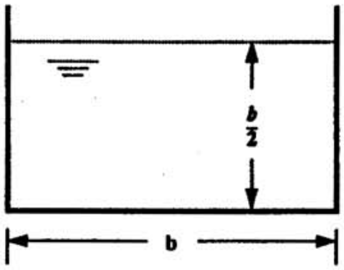


$$R_H = \frac{(b)\left(\frac{b}{2}\right)}{2b} = \frac{b}{4}$$

Go to Eq. (13.10).

$$60 = \frac{1.486}{.017}\left(\frac{b}{4}\right)^{\frac{2}{3}}\sqrt{.002}\,\frac{b^2}{2}$$

$$\therefore\quad b = 5.107\ m$$

$$P = (2)(b) = 10.214\ m$$

For **trapezoidal section** using results of Example 13.6.

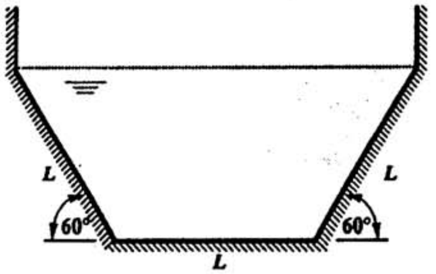


$$R_H = \frac{A}{P} = \frac{(L)(.866L) + 2(L)(.866)(L)(.5)\left(\frac{1}{2}\right)}{3L} = \frac{(.866 + .433)L}{3} = .433L$$

Go to Eq. (13.10).

$$60 = \frac{1.486}{.017}(.433L)^{\frac{2}{3}}\sqrt{.002}\,(1.299L^2)$$

$$L = 3.112\ m \qquad\qquad P = 9.337\ m$$

$\therefore$ Trapezoidal perimeter is shorter.

$$\frac{P_{TRAP}}{P_{RECT}} = \frac{9.337}{10.214} = \boxed{.9141}$$

http://ingesolucionarios.blogspot.com


a) In Case I, wave reaches the entire free surface region.

In Case II, wave does not cover the entire region leaving quiescent zone.

Consider a uniform flow of water of speed $V$ in the $x$ direction with a shallow depth. If $V < \sqrt{gy}$, sketch the circular wave at successive times formed by dropping a pebble into the water. Now consider the case where $V > \sqrt{gy}$. Again show the circular wave at successive time intervals. What is the difference between the patterns? Now explain how if a continuous disturbance is developed at a stationary position in a flow where $V > \sqrt{gy}$, stationary waves having an angle $\alpha$ will be formed as shown. Show that $\sin\alpha = \sqrt{gy}/V$.

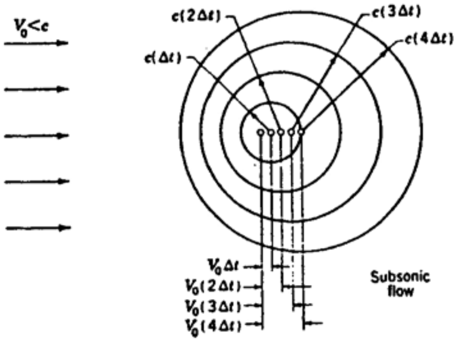


CASE I

CASE II

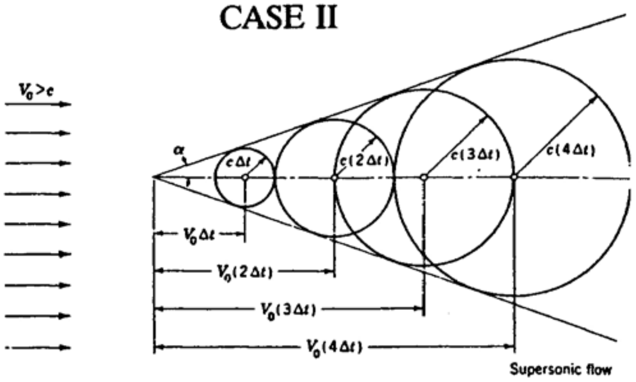


For a continuous disturbance the circles have an outline having the angle $\alpha$.

$$\sin\alpha = \frac{c\Delta t}{V\Delta t} = \overline{V} = \frac{\sqrt{gy}}{V}$$

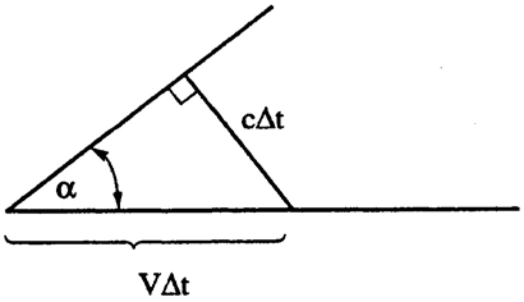

http://ingesolucionarios.blogspot.com

13.37

A stream has a speed of about 16 ft/s and is 2 ft deep. If a thin obstruction such as a reed is present, what is the angle of the waves formed relative to the direction of motion of the stream? See Prob. 13.36.

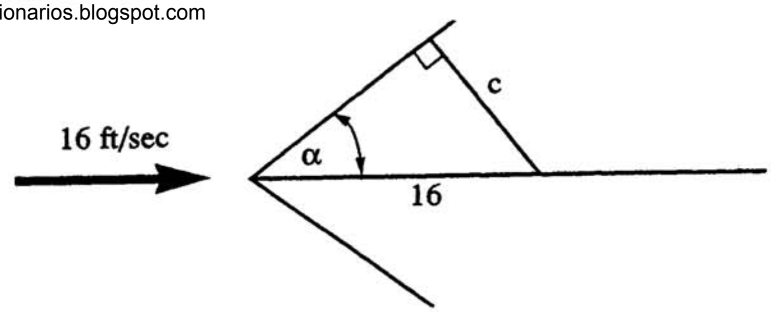


$$c = \sqrt{gy} = \sqrt{(2)(32.2)} = 8.02\ ft/\text{sec}$$

$$\sin\alpha = \frac{8.02}{16} = .501$$

$$\alpha = 30°$$

13.38

A small boat is moving in shallow water where the depth is 2 m. A small bow wave is formed so that it makes an angle of 70° with the centerline of the boat. What is the speed of the boat? See Prob. 13.36.

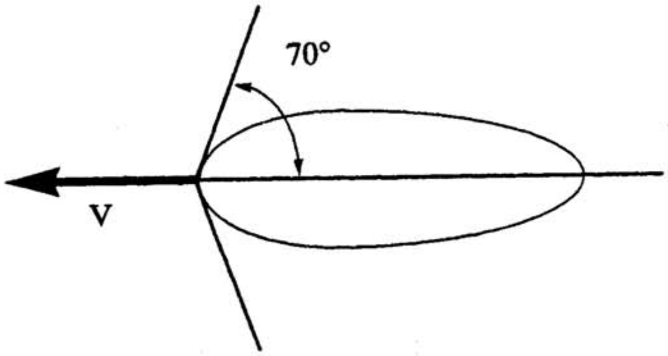


$$c = \sqrt{gy} = \sqrt{(9.81)(2)} = 4.43\ m/\text{sec}$$

$$\frac{4.43\Delta t}{V\Delta t} = \sin 70°$$

$$V = 4.714\ m/\text{sec}$$

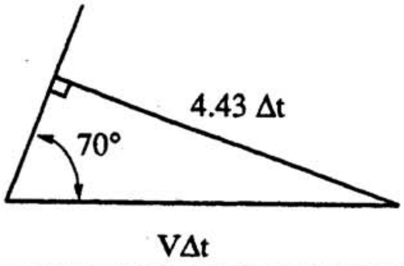

http://ingesolucionarios.blogspot.com
13.39

A stone is thrown into a pond. A wave is formed which has an amplitude of about 1 in and a speed of about 5 ft/s. Estimate the depth of the pond where these measurements are made.

$$\Delta y = 1 \ in.$$

$$c = 5 \ ft/\text{sec}$$

We can use Eq. (13.28).

$$g\left(y + \frac{\Delta y}{2}\right)(y+\Delta y) = c^2 y$$

$$\left(y + \frac{1}{24}\right)\left(y + \frac{1}{12}\right) = \frac{25}{32.2}y = .776y$$

This becomes:

$$y^2 - .651y + .00347 = 0$$

Solving for $y$

$$y = \frac{.651 \pm \sqrt{.424-.01388}}{2} = \frac{.651 \pm .639}{2} = .646 \ ft = \boxed{7.75 \ in.}$$

13.40

Consider a uniform flow in a channel of depth 0.4 m with a speed of 3 m/s. A small disturbance is created on the surface, forming a gravity wave. What is the difference in time at which an observer 10 m downstream from the disturbance first feels the wave as compared with an observer 10 m upstream of the disturbance? Observers and center of disturbance are positioned along a straight line.

$$c = \sqrt{gy} = \sqrt{(9.81)(.4)} = 1.9809 \ m/\text{sec}$$

**Downstream**

$$t_2 = \frac{10}{3+1.9809} = 2.0077 \ \text{sec}$$

**Upstream**

$$t_2 = \frac{10}{3-1.9809} = 9.8126 \ \text{sec}$$

$$\Delta t = 9.8126 - 2.0077$$

$$\boxed{\Delta t = 7.8049 \ sec}$$

13.41

A wide rectangular channel excavated from clean earth has a flow of 3 $m^3/(s)(m)$. What is the critical depth and the minimum specific energy? What is the slope for critical normal flow? If $y = 3$ m at a section, what is the Froude number at this section for the flow stated above? Water is at 5°C.

From Eq. (13.39)

$$y_{cr} = \left(\frac{q^2}{g}\right)^{\frac{1}{3}} = \left(\frac{9}{9.81}\right)^{\frac{1}{3}} = .972\ m$$

From Eq. (13.43)

$$(E_{sp})_{\min} = \frac{3}{2}y_{cr} = 1.4575\ m$$

To find $(S_0)_{cr}$, we must get $f$. We note from Table 14.1 that $e = 37\ mm$ and since $R_H = y_{cr}$, we have for relative roughness ratio

$$\frac{e}{4R_H} = \frac{.037}{(4)(.972)} = .00952$$

The Reynolds number is

$$Re_H = \frac{\left(\frac{q}{y_{cr}}\right)[(4)(.972)]}{1.519\times10^{-6}} = \frac{\left(\frac{3}{(1)(.972)}\right)(4)(.972)}{1.519\times10^{-6}} = 7.90\times10^6$$

Hence from Moody, we get

$$f = .0375$$

From Eq. (13.46)

$$S_{cr} = \frac{f}{8} = \frac{.0375}{8} = .004688$$

$$Fr = \frac{V}{\sqrt{gy}} = \frac{\frac{3}{(1)(3)}}{\sqrt{(9.81)(3)}} = .1843$$

http://ingesolucionarios.blogspot.com

13.42

A wide rectangular channel has a critical depth of 2 m and a critical slope $S_0$ of 0.001. What is the volume of flow for this condition? What is the depth of flow for normal flow with a value of flow $q = 5\ m^3/(s)(m)$ with the above slope? Water is at 5°C.

$$S_{cr} = \frac{f}{8} = .001 \qquad f = .008$$

$$y_{cr} = \left(\frac{q^2}{g}\right)^{\frac{1}{3}} \qquad 2 = \left(\frac{q^2}{9.81}\right)^{\frac{1}{3}}$$

$$q = 8.86\ \frac{m^3}{s \cdot m}$$

Assume rough flow zone. From Eq. (13.6):

$$V = \frac{5}{(1)(y)} = \left[\frac{8g(.001)(y)}{.008}\right]^{\frac{1}{2}}$$

$$\boxed{y = 1.366\ m}$$

When the flow in a wide, finished-concrete, rectangular channel has a Froude number of unity the depth is 1 m. What is the Froude number when the depth is 1.5 m for the same mass flow $q$?

13.43 From Eq. (13.39)

$$y_{cr} = 1 = \left(\frac{q^2}{g}\right)^{\frac{1}{3}}$$

$$\therefore \quad q = 3.13\ \frac{m^3}{\sec m}$$

Let $y = 1.5$ . Then

$$\frac{V}{\sqrt{gy}} = Fr$$

$$\frac{\frac{3.13}{y}}{\sqrt{gy}} = Fr$$

$$Fr = .544$$

http://ingesolucionarios.blogspot.com

Edu_Zegarr_ch

13.44

At a section in a rectangular channel, the average velocity is 10 ft/s. Is the flow a tranquil (Fr < 1) or shooting flow (Fr > 1)?

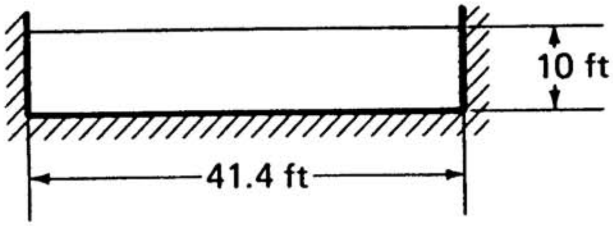


$$q = (10)(1)(10) = 100\ ft^2/s$$

$$y_{cr} = \left(\frac{q^2}{g}\right)^{\frac{1}{3}} = 6.77\ ft$$

Flow is tranquil flow.

---

In Prob. 13.44 what is the specific energy? What other depth is possible for this energy? The critical depth from Prob. 13.44 is 6.77 ft?

13.45 From previous problem, $q = 100\ c.f.s.$ From Eq. (13.37)

$$E_{sp} = \frac{q^2}{2y^2g} + y = \frac{100^2}{(2)(10^2)(32.2)} + 10 = 11.55\ ft$$

Find another value of $y$.

$$11.55 = \frac{100^2}{(2)(32.2)y^2} + y$$

$$11.55 = \frac{155.3}{y^2} + y$$

Solve by trial and error using $y < 6.77\ ft$

$$y = 4.80\ ft$$

http://ingesolucionarios.blogspot.com

13.46

For 200 $ft^3/s$ of water flowing in a rectangular channel 10 ft wide, what is the minimum specific energy possible for this flow? What are the critical depth and the critical velocity?

For critical flow go to Eq. (13.49).

$$\frac{(10)(200)^2}{(32.2)[(y_{cr})(10)]^3} = 1$$

$$y_{cr} = 2.316\ ft.$$

$$(E_{sp})_{\min} = \frac{A_{cr}}{2b} + y_{cr} = \frac{(10)(2.316)}{(2)(10)} + 2.316 = 3.474\ ft$$

$$V_{cr} = \frac{200}{(10)(2.316)} = \boxed{8.64\ ft/sec}$$

http://ingesolucionarios.blogspot.com Edu_Zegarr_ch

http://ingesolucionarios.blogspot.com

13.47

What is the critical depth for a rectangular finished-concrete channel of width 3 m. (The channel cannot be considered to be a wide channel.) What is the slope for critical normal flow? The flow $Q$ is 2 m$^3$/s. Water is at 5°C.

Go to Eq. (13.49)

$$\frac{bQ^2}{gA^3} = 1$$

$$\therefore \quad \frac{(3)(2^2)}{(g)[(3)(y_{cr})]^3} = 1 \qquad y_{cr} = .356 \ m$$

From Eq. (13.41) we have:

$$S_{cr} = \frac{(f)[3+(2)(.356)]}{(8)(3)} \tag{a}$$

Now find $f$ . From Table 13.1 we have for $e$ the value .001 $m$ . Also we have for $R_H$ .

$$R_H = \frac{A}{P} = \frac{(3)(.356)}{3+(2)(.356)} = .288 \ m \tag{b}$$

Hence

$$\frac{e}{4R_H} = \frac{.001}{(4)(.288)} = .00087$$

Now Reynolds number is:

$$Re_H = \frac{\left(\frac{Q}{A}\right)(4R_H)}{1.519\times10^{-6}} = \frac{\left[\frac{2}{(3)(.356)}\right][(4)(.288)]}{1.519\times10^{-6}} = 1.420\times10^6$$

Hence from Moody:

$$f = .019$$

Now go back to Eq. (a).

$$S_{cr} = \frac{(.0019)[3+(2)(.356)]}{(8)(3)} = \boxed{.00294}$$

http://ingesolucionarios.blogspot.com

13.48 From trigonometry

What is the critical depth for a triangular cross section for a flow $Q$ of 5 $m^3/s$? The angle between sides is 60°.

$$b = 2[y \tan 30°]$$

$$A = \left(\frac{1}{2}\right)[2y \tan 30°]y$$

Substitute into Eq. (13.49).

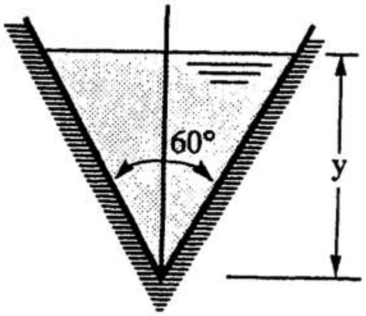


$$\frac{(5^2)(2y_{cr}\tan 30°)}{(9.81)(y_{cr}^2\tan 30°)^3} = 1$$

$$\therefore\ y_c^5 = \frac{(5^2)(2)}{(9.81)(\tan 30°)^2}$$

$$y_c = 1.725\ m$$

13.49

What is the critical depth of a trapezoidal cross section for a flow $Q$ of 10 $m^3/s$? The width at the base is 3 m and the angle $\alpha$ at the sides is 60°.

$$b = 3 + 2\,\frac{y_{cr}}{\tan 60°} = 3 + 1.155y_{cr}$$

$$A_{cr} = (3)(y_{cr}) + 2\left(\frac{1}{2}\right)(y_{cr})\left(\frac{y_{cr}}{\tan 60°}\right) = 3y_{cr} + .577y_{cr}^2$$

Going to Eq. (13.49) we have

$$\frac{(10)^2)(3+1.155y_{cr})}{(9.81)(3y_{cr}+.577y_{cr}^2)^3} = 1$$

$$\frac{61.3(2.60 + y_{cr})}{(5.199y_{cr} + y_{cr}^2)^3} = 1$$

By trial and error

$$y_{cr} = .975\ m$$

13.50

Shown is a partially filled pipe discharging 450 ft³/s. What is the critical depth?

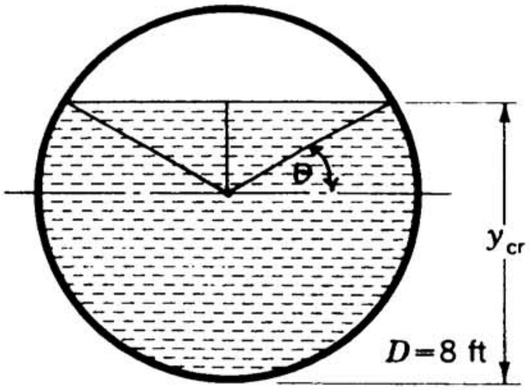


$$q = 450 \ c.f.s.$$

Go to Eq. (13.49).

$$\frac{bQ^2}{gA_{cr}^3} = 1$$

$$b = 2(4\cos\theta) = 8\cos\theta$$

$$A = \left(\frac{1}{2}\right)\left(\frac{\pi 8^2}{4}\right) + 2\left(\frac{\theta}{360}\right)\left(\frac{\pi 8^2}{4}\right) + (2)(4\cos\theta)(4\sin\theta)\left(\frac{1}{2}\right)$$

We then have:

$$\frac{(8\cos\theta)(450)^2}{(32.2)[25.13 + .279\,\theta + 8\sin 2\theta]^3} = 1$$

$$\frac{50{,}310\ \cos\theta}{[25.13 + .279\theta + 8\sin 2\theta]^3} = 1$$

Solve by trial and error.

$$\theta = 20°$$

$$\therefore \quad y_{cr} = 4 + 4\sin 20° = 5.368 \ ft.$$

$$\boxed{y_{cr} = 5.368 \ ft}$$

http://ingesolucionarios.blogspot.com

13.51

Oil of S.G. equal to 0.69 and viscosity of $10^{-4}$ lb · s/ft² is flowing with an average velocity of 10 ft/s at a section of height 1 ft along a rectangular channel with a very small slope.
(a) What is the total mechanical energy in feet of a flow particle $\frac{1}{2}$ ft from the channel bed relative to the channel bed?
(b) What is the total mechanical energy per unit mass of a particle at the free surface relative to the bed?

$E_{sp}$ is the total mechanical energy in units of length for all particles in a section.

$\therefore$ 1) $$E_{sp} = \frac{V^2}{2g} + y = \frac{10^2}{(2)(32.2)} + 1 = 2.553\ ft$$

2) $$\frac{Total\ Mech.\ Energy}{Unit\ Mass} = (2.553)(g) = 82.2\ \frac{ft-lb}{slug}$$

13.52

In the previous problem, determine the critical depth and the critical velocity. What is the actual Froude numbers for the actual flow described and the critical flow? What compressible flow is this flow analogous to?

For a unit width:

$$q = (10)(1)(1) = 10\ \frac{ft^3}{ft\text{-sec}}$$

From Eq. (13.39):

$$\therefore\ y_{cr} = \left(\frac{q^2}{g}\right)^{\frac{1}{3}} = \left(\frac{10^2}{32.2}\right)^{\frac{1}{3}} = 1.459\ ft$$

$$V_{cr} = \sqrt{(g)(y_{cr})} = \sqrt{(32.2)(1.459)} = 6.854$$

$$(Fr)_{act} = \sqrt{\frac{V^2}{gy}} = \sqrt{\frac{10^2}{(32.2)(1)}} = \boxed{1.762}$$

$$(Fr)_{cr} = \boxed{1}$$

**Supersonic Flow**

http://ingesolucionarios.blogspot.com

Water is flowing in a channel having an equilateral cross section as shown. The volume of flow is 0.707 $m^3/s$. The material is finished concrete. What is the critical depth? What is the minimum specific energy?

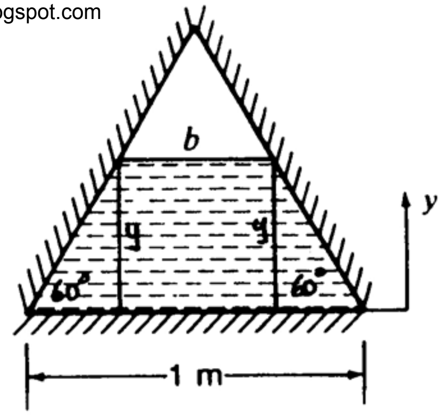


Find $b$.

$$b = 1 - 2\left[\frac{y}{\tan 60°}\right] = (1 - 1.155y)$$

For critical flow go to Eq. (13.49)

$$\frac{bQ^2}{gA_{cr}^3} = 1$$

But

$$A_{cr} = (y_{cr})(1 - 1.155y_{cr}) + (2)\left(\frac{1}{2}\right)(y_{cr})\,\frac{y_{cr}}{\tan 60°}$$

$$= y_{cr} - 1.155y_{cr}^2 + .5774y_{cr}^2$$

$$= y_{cr} - .5776y_{cr}^2$$

$$\therefore \quad \frac{(1 - 1.155y_{cr})(.5)}{(9.81)(y_{cr} - .5776y_{cr}^2)^3} = 1$$

$$(1 - 1.155y_{cr})(.05097) = (y_{cr} - .5776y_{cr}^2)^3$$

Solve by trial and error or on a programmable calculator.

$$y_{cr} = .392 \ m$$

$$(E_{sp})_{min} = \frac{.392 - (.5776)(.392)^2}{(2)[1 - (1.155)(.392)]} + .392 = \boxed{.6691 \ m}$$

http://ingesolucionarios.blogspot.com

In a rectangular channel of width 20 ft, what is slope $S_0$ to have normal and critical flow of 250 $ft^3/s$? The channel is finished concrete and the water flowing is at 60°F.

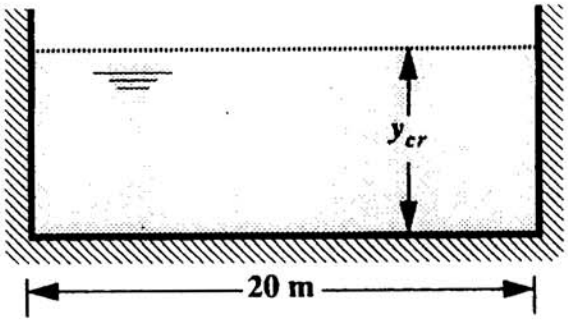


Go to Eq. (13.49 first.

$$\frac{bQ^2}{gA_{cr}^3} = 1$$

$$\therefore \quad (20)(250)^2 = 32.2A_{cr}^3 \qquad (1)$$

$$A_{cr} = 33.86\ ft^2 \qquad \therefore \quad y_{cr} = \frac{33.86}{20} = 1.693\ ft$$

$$R_H = \frac{A}{P} = \frac{(20)(y_{cr})}{20 + 2y_{cr}} = 1.448\ ft$$

$$\frac{e}{4R_H} = \frac{.0032}{(4)(1.448)} = .000553$$

$$Re_H = \frac{\left[\frac{250}{33.86}\right](4)(1.448)}{1.217\times10^{-5}} = 3.514\times10^6$$

From **Moody** $f = .017$ . Go to Eq. (13.51).

$$S_{cr} = \frac{A_{cr}\,f}{8b\,R_H} = \frac{(33.86)(.017)}{(5)(20)(1.448)}$$

$$S_{cr} = \boxed{.002485}$$

http://ingesolucionarios.blogspot.com
Edu_Zegarr_ch

http://ingesolucionarios.blogspot.com

13.55

Water is to flow at the rate of 10 m³/s at a temperature of 30°C in an asphalt lined semicircular channel. What is the radius of the channel for normal critical flow? The flow must fill the semicircular section. Also, determine the slope $S_0$.

Go to Eq. (13.49)

$$\frac{bQ^2}{gA_{cr}^3} = 1$$

$$\frac{2(R_{cr})(10^2)}{(9.81)\left(\frac{\pi}{2} R_{cr}^2\right)^3} = 1$$

$$R_{cr}^5 = \frac{(2)(10^2)}{(9.81)\left(\frac{\pi}{2}\right)^3} \qquad R_{cr} = 1.394 \ m$$

$$R_H = \frac{A}{P} = \frac{\frac{1}{2}\pi(1.394)^2}{(\pi)(1.394)} = .6969 \ m$$

$$\frac{e}{4R_H} = \frac{.0054}{(4)(.6969)} = .00194$$

$$Re_H = \frac{\left[(10)/\left(\frac{\pi}{2}\right)(1.394)^2\right](4)(.6969)}{.804\times10^{-6}} = 1.136\times10^7$$

$$f = .0225$$

$$S_{cr} = \frac{\left(\frac{1}{2}\right)(\pi)(1.394)^2(.0225)}{(8)(2)(1.394)(.6969)} = \boxed{.00442}$$

http://ingesolucionarios.blogspot.com

A rectangular channel is to have 20 $m^3/s$ of 10°C water flowing in normal critical flow. The width of the channel is 5 m and the slope is 0.003. What is the roughness $e$ for such circumstances?

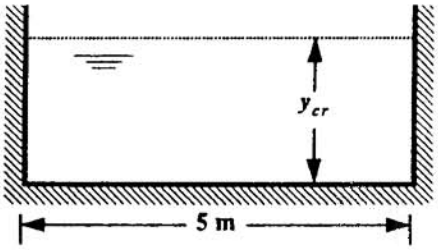


Go to Eq. (13.49) for critical flow.

$$\frac{bQ^2}{g(A_{cr})^2} = 1$$

$$\left[\frac{(5)(20)^2}{9.81}\right]^{\frac{1}{3}} = A_{cr} = 5.886\ m^2$$

$$y_{cr} = \frac{5.886}{5} = 1.177\ m$$

$$V_{cr} = \frac{20}{5.886} = 3.398\ m/s$$

$$R_H = \frac{A}{P} = \frac{(5)(1.177)}{5 + (2)(1.177)} = .8002$$

$$Re_H = \frac{(3.398)(4)(.8002)}{1.308\times10^{-6}} = 8.315\times10^6$$

Now go to Eq. (13.51).

$$.003 = \frac{(5.886)f}{(8)(5)(.8002)}$$

$$f = .01631$$

From **Moody**

$$\frac{e}{4R_H} = .0004$$

$$e = (4)(.8002)(.0004) = .00128\ m = \boxed{1.28\ mm}$$

http://ingesolucionarios.blogspot.com
Edu_Zegarr_ch

 http://ingesolucionarios.blogspot.com

A channel is shown to conduct water at 60°C in a normal, critical flow. If the flow is to be 100 m³/s, what is the proper slope? It is an earthen channel with $e = 0.15$ m.

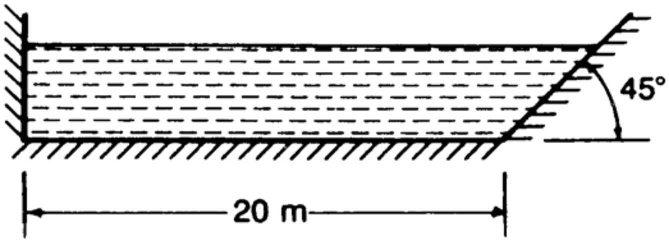


We go to Eq. (13.49).

$$\frac{bQ^2}{g A_{cr}^3} = 1$$

$$\frac{[20 + (y_{cr})](100)^2}{(9.81)\left[(20)(y_{cr}) + \frac{1}{2}(y_{cr})^2\right]^3} = 1$$

$$\therefore \quad (20 + y_{cr})(1{,}019.4) = \left[20y_{cr} + \frac{y_{cr}^2}{2}\right]^3$$

Solve by trial and error or on a programmable calculator.

$$y_{cr} = 1.35 \ m$$

$$R_H = \frac{A}{P} = \frac{(20)(1.35) + \frac{1}{2}(1.35)^2}{1.35 + 20 + \frac{1.35}{.707}} = 1.200 \ m$$

$$\frac{e}{4R_H} = \frac{.15}{(4)(1.2)} = .031$$

http://ingesolucionarios.blogspot.com Edu_Zegarr_ch 

http://ingesolucionarios.blogspot.com

(cont.)

$$Re_H = \frac{\dfrac{100}{\left[(20)(1.35) + \dfrac{1.35^2}{2}\right]}(4)(1.20)}{.477\times10^{-6}} = 3.605\times10^7$$

$$f = .058$$

$$S_0 = \frac{A\,c\,r\,f}{(8)(b)(R_H)} = \frac{\left[(20)(1.35) + \dfrac{1.35^2}{2}\right](.058)}{(8)\,(20 + 1.35)\,(1.20)}$$

$$S_0 = .00776$$

http://ingesolucionarios.blogspot.com
Edu_Zegarr_ch

http://ingesolucionarios.blogspot.com

What is the critical depth of a parabolic channel when there is a flow of 3 m³/(s)(m)? Position $A$ on the channel has the coordinates shown.

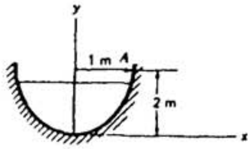


$$x^2 = c\,y$$

when $\qquad x = 1 \quad , \quad y = 2 \quad , \quad c = \frac{1}{2}$

$$\therefore \quad x^2 = \frac{y}{2} \qquad or \qquad y = 2x^2$$

Go to Eq. 13.49

$$\frac{bQ^2}{gA_{cr}^3} = 1 \qquad \text{(a)}$$

Express $A_{cr}$ in terms of $y_{cr}$.

$$A_{cr} = 2\int_0^{y_{cr}} x\,dy = 2\int_0^{y_{cr}} \sqrt{\frac{y}{2}}\,dy$$

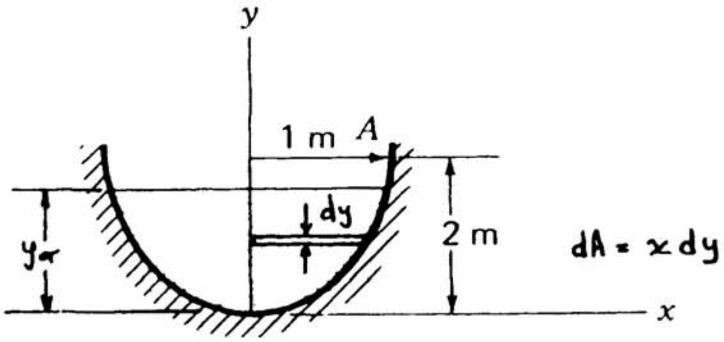


$$A_{cr} = \sqrt{2}\left(y^{\frac{3}{2}}\,\frac{2}{3}\right)_0^{y_{cr}} = \frac{2\sqrt{2}}{3}\,y_{cr}^{\frac{3}{2}} \qquad \text{(b)}$$

Now go to Eq. (a).

$$\frac{(2)\sqrt{\dfrac{y_{cr}}{2}}\,(3^2)}{(9.81)\left(2\,\dfrac{\sqrt{2}}{3}\,y_{cr}^{\frac{3}{2}}\right)^3} = 1 \qquad\qquad \frac{\sqrt{2}\,(9)}{(9.81)\left(\dfrac{2^{\frac{9}{2}}}{27}\right)} = y_{cr}^4$$

$$\boxed{y_{cr} = 1.1155\ m}$$


http://ingesolucionarios.blogspot.com Edu_Zegarr_ch

13.59 http://ingesolucionarios.blogspot.com

In Prob. 13.58, what is the critical slope $S_{cr}$ for normal critical flow? The friction factor $f = 0.015$ and the critical depth and critical area were found to be $y_{cr} = 1.1155$ m and $A_{cr} = (2\sqrt{2}/3)y_{cr}^{3/2}$. *Hint*: Note that $ds = \sqrt{1 + (dy/dx)^2}\,dx$ and that $\int\sqrt{a^2 + x^2}\,dx = \frac{1}{2}[x\sqrt{a^2 + x^2} + a^2 \ln(x + \sqrt{a^2 + x^2})]$.

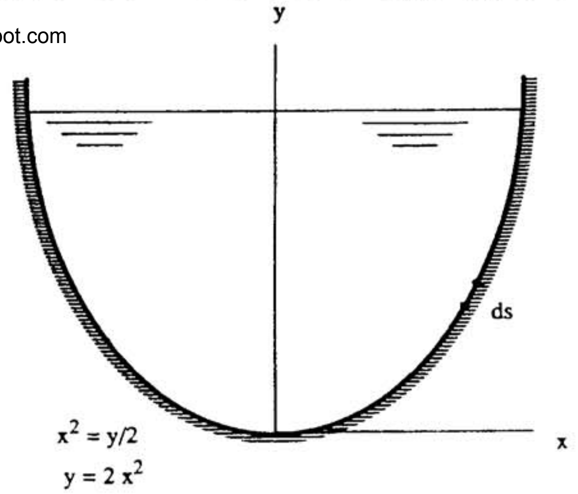


We use Eq. 13.51

$$S_{cr} = \frac{A_{cr} f}{8bR_H} = \frac{f P_{cr}}{(8)(b)} \qquad \text{(a)}$$

We need $P_{cr}$.

$$ds = \sqrt{dx^2 + dy^2} = \sqrt{1 + \left(\frac{dy}{dx}\right)^2}\, dx$$

$$P_{cr} = 2\int_0^{\sqrt{1.115/2}} \sqrt{1 + \left(\frac{dy}{dx}\right)^2}\, dx$$

Note that:

$$2x\,dx = \left(\frac{1}{2}\right) dy$$

$$\frac{dy}{dx} = 4x$$

$$P_{cr} = 2\int_0^{.7468} \sqrt{1 + 16x^2}\, dx = 8\int_0^{.7468} \sqrt{\frac{1}{16} + x^2}\, dx \qquad \text{(b)}$$

$$= \frac{8}{2}\left[x\sqrt{\frac{1}{16} + x^2} + \frac{1}{16}\ln\left(x + \sqrt{\frac{1}{16} + x^2}\right)\right]\Bigg|_0^{.7468} = 2.806\ m$$

Go back to Eq. (a).

$$S_{cr} = \frac{(.015)(2.806)}{(8)\left(\frac{1.115}{2}\right)^{\frac{1}{2}}(2)} = \boxed{.003522}$$

At a section in a triangular channel, the average velocity is 10 ft/s. Is the flow tranquil (Fr < 1) or shooting (Fr > 1)?

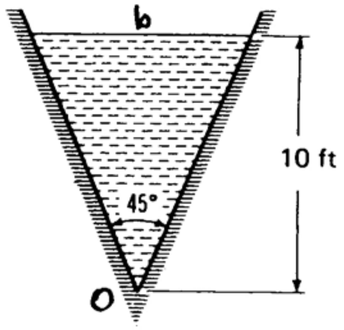


$$\frac{\frac{b}{2}}{10} = \tan 22.5°$$

$$b = (20)(.414) = 8.28\ ft$$

$$Q = (10)\underbrace{\left[\left(\frac{1}{2}\right)(8.28)(10)\right]}_{\text{Area}} = 414\ c.f.s.$$

From Eq. 13.49

$$\frac{bQ^2}{gA_{cr}^3} = 1$$

$$b = 2y_{cr}\tan 22.5° = .828y_{cr}$$

$$A_{cr} = \left(\frac{1}{2}\right)[(.828)(y_{cr})][y_{cr}]$$

Subst. into (a).

$$\frac{(.828\ y_{cr})(414)^2}{(32.2)(.414)^3 y_{cr}^6} = 1$$

$$y_{cr}^5 = \frac{(.828)(.414)^2}{(32.2)(.414)^3}$$

$$y_{cr} = 9.09\ ft$$

Flow is **tranquil.**

http://ingesolucionarios.blogspot.com

Starting with Eq. (13.9) with $R_H$ replaced by $A/P$, show that

$$\frac{dV}{dy_N} = \frac{\kappa}{n} S_0^{1/2}\left(\frac{2}{3}\right)\left(\frac{A}{P}\right)^{-1/3} \frac{d(A/P)}{dy_N}$$

Show that, if the cross-section area increases faster than the perimeter for increased values of $y_N$, then $V$ and $Q$ must increase.

$$V = \frac{\kappa}{n} R_H^{\frac{2}{3}} \sqrt{S_0} = \frac{\kappa}{n}\left(\frac{A}{P}\right)^{\frac{2}{3}}\sqrt{S_0}$$

$$\frac{dV}{dy_N} = \frac{\kappa}{n}\,\frac{2}{3}\left(\frac{A}{P}\right)^{-\frac{1}{3}} \frac{d\left(\frac{A}{P}\right)}{dy_N}\sqrt{S_0}$$

If $A$ increases faster than $P$ for increasing $y_N$, then

$$\frac{d\left(\frac{A}{P}\right)}{dy_N} > 0$$

$$\therefore \quad \frac{dV}{dy_N} > 0$$

Hence $V$ increases with $y_N$. From **continuity**

$$Q = VA$$

$$\frac{dQ}{dy_N} = V\left(\frac{dA}{dy_N}\right) + A\left(\frac{dV}{dy_N}\right)$$

Note $\frac{dV}{dy_N}$ is positive. Also, if $y_N$ increases, $A$ must increase so that we can say

$$\frac{dQ}{dy_N} > 0$$

Therefore, $Q$ increases with increase of $y_N$.

http://ingesolucionarios.blogspot.com

Show for increasing $y_N$, that $V$ and $Q$ must increase for a given slope $S_0$ and for a rectangular channel. See Prob. 13.61.

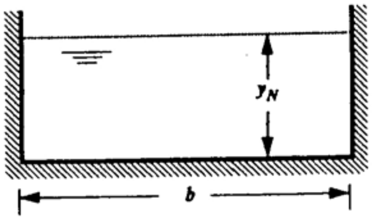


$$V = \frac{\kappa}{n}\left(\frac{A}{P}\right)^{\frac{2}{3}}\sqrt{S_0}$$

$$\frac{dV}{dy_N} = \frac{\kappa}{n}\sqrt{S_0}\,\frac{2}{3}\left(\frac{A}{P}\right)^{-\frac{1}{3}}\left[\frac{1}{P}\,\frac{dA}{dy_N} - \frac{A\,\dfrac{dP}{dy_N}}{P^2}\right]$$

$$\frac{dV}{dy_N} = \frac{\kappa}{n}\sqrt{S_0}\,\frac{2}{3}\left(\frac{A}{P}\right)^{-\frac{1}{3}}\left[\frac{P\,\dfrac{dA}{dy_N} - A\,\dfrac{dP}{dy_n}}{P^2}\right]$$

$$A = (b)(y_N) \qquad P = 2y_N + b$$

$$\frac{dA}{dy_n} = b \qquad \frac{dP}{dy_N} = 2$$

$$\therefore \quad \frac{dV}{dy_N} = \frac{\kappa}{n}\sqrt{S_0}\,\frac{2}{3}\left(\frac{A}{P}\right)^{-\frac{1}{3}}\left[\frac{(2y_N + b)(b) - (by_N)(2)}{(2y_N + b)^2}\right]$$

Note $$(2y_N + b)b - 2y_N b = b^2 > 0$$

$$\therefore \quad \frac{dV}{dy_N} > 0 \qquad (1)$$

But $$V = \frac{Q}{b\,y_N} \qquad Q = V\,b\,y_N$$

$$\therefore \quad \frac{dQ}{dy_N} = Vb + by_N\left(\frac{dV}{dy_N}\right)$$

Because of (1)

$$\frac{dQ}{dy_N} > 0 \qquad (2)$$

$\therefore$ $Q$ and $V$ increase with increasing $y_N$.

Do the preceding for a triangular channel.

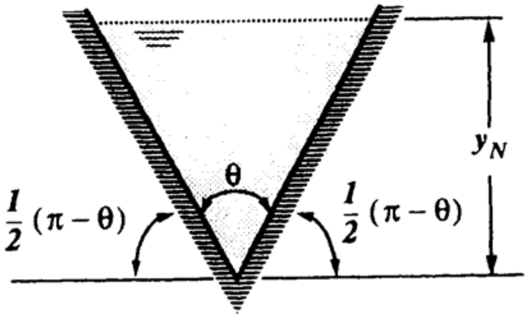


Start with Eq. (13.9).

$$V = \frac{\kappa}{n}\left(\frac{A}{P}\right)^{\frac{2}{3}}\sqrt{S_0}$$

$$\frac{dV}{dy_N} = \frac{\kappa}{n}\sqrt{S_0}\left(\frac{2}{3}\right)\left(\frac{A}{P}\right)^{-\frac{1}{3}}\left[\frac{P\dfrac{dA}{dy_N} - A\dfrac{dP}{dy_N}}{P^2}\right] \qquad (1)$$

$$\frac{d\left(\dfrac{A}{P}\right)}{dy_N} = \left[\frac{P\dfrac{dA}{dy_N} - A\dfrac{dP}{dy_N}}{P^2}\right]$$

$$A = \frac{1}{2}(y_N)\left(2y_N\tan\frac{\theta}{2}\right) = y_N^2\tan\frac{\theta}{2}$$

$$P = (2)\,\frac{y_N}{\cos\dfrac{\theta}{2}}$$

$$\therefore \quad \frac{d\left(\dfrac{A}{P}\right)}{dy_N} = \frac{2\,\dfrac{y_N}{\cos\dfrac{\theta}{2}}\left(2y_N\tan\dfrac{\theta}{2}\right) - \left(y_N^2\tan\dfrac{\theta}{2}\right)\left(\dfrac{2}{\cos\dfrac{\theta}{2}}\right)}{4\,\dfrac{y_N^2}{\cos^2\dfrac{\theta}{2}}}$$

http://ingesolucionarios.blogspot.com

(cont.)

$$\frac{d\left(\frac{A}{P}\right)}{dy_N} = \frac{\frac{2\tan\frac{\theta}{2}}{\cos\frac{\theta}{2}}}{\frac{4}{\cos^2\frac{\theta}{2}}} = \frac{1}{2}\,\frac{\tan\left(\frac{\theta}{2}\right)}{\frac{1}{\cos\frac{\theta}{2}}} = \frac{1}{2}\sin\frac{\theta}{2}$$

$$\therefore \quad \frac{d\left(\frac{A}{P}\right)}{dy_N} > 0$$

And so from (1)

$$\boxed{\frac{dV}{dy_N} > 0} \qquad (2)$$

Note that

$$Q = y_N^2 \tan\left(\frac{\theta}{2}\right) V \qquad (3)$$

$$\therefore \quad \frac{dQ}{dy_N} = 2y_N \tan\left(\frac{\theta}{2}\right) V + y_N^2 \tan\frac{\theta}{2}\left(\frac{dV}{dy_N}\right) \qquad (4)$$

Because of (2) we can say

$$\boxed{\frac{dQ}{dy_N} > 0} \qquad (5)$$

$\therefore$ Again for this section an increase in $y_N$ means an increase in $Q$ and $V$ for a given slope $S_0$ .

 http://ingesolucionarios.blogspot.com

Draw sketches similar to those in Fig. P13.18 for the following cases. Indicate the kind of flow to be expected after the small rise. Is $y_2$ greater than or smaller than $y_1$?

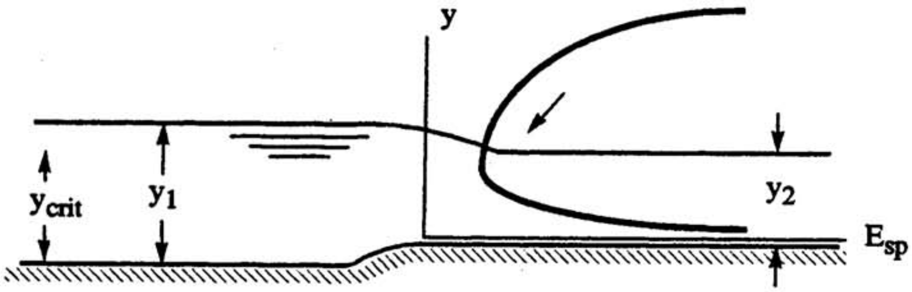


$y_2 < y_1$ But still tranquil flow.

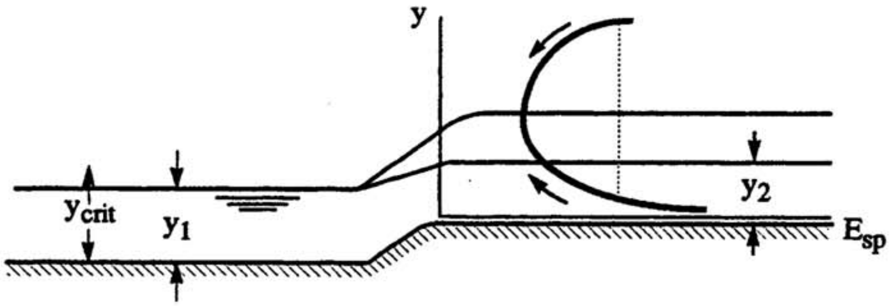


$y_2 > y_1$ Shooting flow or tranquil flow.

http://ingesolucionarios.blogspot.com Edu_Zegarr_ch 

http://ingesolucionarios.blogspot.com

13.65

Water is moving with a speed of 1 ft/s and a depth of 3 ft. It approaches a smooth rise in the channel bed of 1 ft. What should the estimated depth be after the rise? The channel is rectangular.

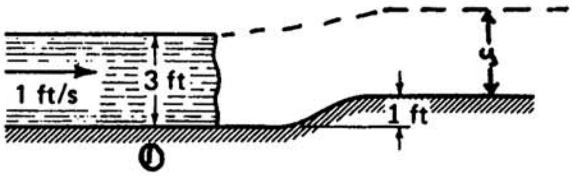


$$(E_{sp})_1 = \frac{q^2}{2y_1^2 g} + y_1 = \frac{9}{(2)(9)g} + 3 = 3.0155\ ft$$

For no losses we then have:

$$(E_{sp})_1 = H - 0 \qquad (E_{sp})_2 = H - 1$$

$$\therefore\ (E_{sp})_2 = (E_{sp})_1 - 1 = 2.0155\ ft$$

Compute $y_{cr}$ next.

$$y_{cr} = \left\{\frac{[(3)(1)]^2}{g}\right\}^{\frac{1}{3}} = .654\ ft$$

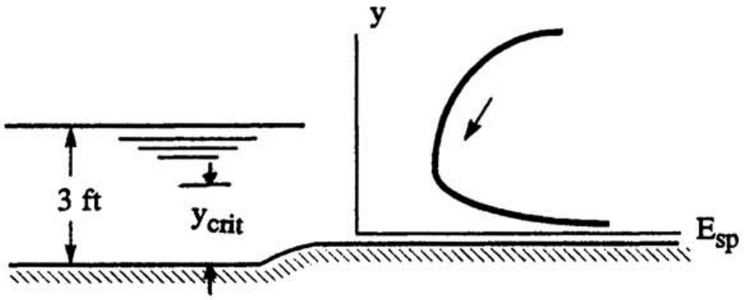


With $h_0$ increasing then $E_{sp}$ must **decrease** according to Eq. 13.34. We must have one value of $y$ which must be for tranquil flow. Now going to Eq. 13.37 we have:

$$2.0155 = \frac{3^2}{2y^2 g} + y$$

$$2.0155 = \frac{.1398}{y^2} + y$$

Solve by trial and error.

$$\boxed{y = 1.980\ ft}$$

 http://ingesolucionarios.blogspot.com

A flow of 0.2 $ft^3/s$ flows over a rectangular channel of width 3 ft. If there is a smooth drop of 2 in, what is the elevation of the free surface above the bed of the channel after the drop? The velocity before the drop is 0.3 ft/s.

$$Q = .2\ c.f.s. \qquad V_1 = .3\ ft/\text{sec} \qquad Width = 3\ ft$$

**At section (1):**

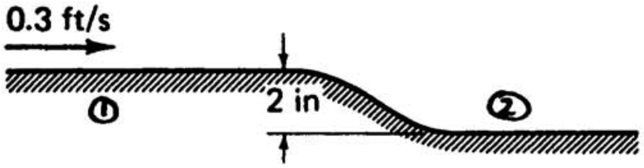


$$Q = (.3)(3)(y_1)$$

$$y_1 = \frac{.2}{.9} = .222\ ft = 2.67\ in.$$

**The critical depth is:**

$$y_{cr} = \left(\frac{q^2}{g}\right)^{\frac{1}{3}} = \left(\frac{\left(\frac{.2}{3}\right)^2}{32.2}\right)^{\frac{1}{3}} = .05168\ ft = .6202\ in.$$

**We have tranquil flow.**

$$(E_{sp})_1 = \frac{\left(\frac{.2}{3}\right)^2}{(2)(.222)^2 g} + .222 = .2234\ ft$$

**With no losses we have for** $(E_{sp})_2$

$$(E_{sp})_2 = (E_{sp})_1 + \frac{2}{12} = .2234 + \frac{1}{6} = .3901\ ft$$

**Now** **we see that we must have one depth greater than** $y_1 = .222\ ft$ **. To get this depth** $y_2$ **, go to Eq.** (13.37).

http://ingesolucionarios.blogspot.com 

http://ingesolucionarios.blogspot.com

**(cont.)**

$$.3901 = \frac{\left(\frac{.2}{3}\right)^2}{2g(y_2)^2} + y_2$$

$$.3901 = \frac{6.90 \times 10^{-5}}{(y_2)^2} + y_2$$

Solve by trial and error.

$$\boxed{y_2 = .3896\ ft}$$

13.67

A broad-crested weir has a width of 1 m. The free surface is at a height of 0.3 m above the surface of the weir at a position well upstream of the weir. What is the volume of flow? What is the minimum depth $y$ over the weir and where does it occur?

Go to Eq. (13.57).

$$Q = b\left(\frac{2}{3}y_0\right)^{\frac{3}{2}}\sqrt{g} = (1)\left[\left(\frac{2}{3}\right)(.3)\right]^{\frac{3}{2}}\sqrt{9.81} = .280\ m^3/\text{sec}$$

$$y_{\min} = y_{cr} = \left(\frac{q^2}{g}\right)^{\frac{1}{3}} = .200\ m$$

Occurs near end of weir surface.

http://ingesolucionarios.blogspot.com

13.68

Water flows from a reservoir over a runoff, as shown in Fig. P13.68. Estimate the flow $q$. Comment on the accuracy of your estimate if the opening of the water is increased substantially from 0.6 m given or decreased substantially from this value.

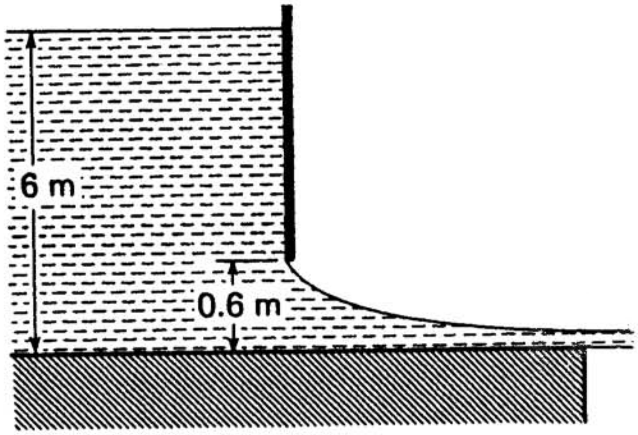


With no friction we can say that the flow will be maximum with a critical depth at the end of the runoff as in the case of the broad crested weir. Using Eq. (13.55).

$$q = 1\left(\frac{2}{3}E_{sp}\right)^{\frac{3}{2}}\sqrt{g}$$

From Eq. (13.35), on taking $V \approx 0$ upstream,

$$E_{sp} = 6\ m$$

$$\therefore\quad q = \left(\frac{2}{3}6\right)^{\frac{3}{2}}\sqrt{g} = 25.1\ \frac{m^3}{\sec\ m}$$

a) If the opening is enlarged, we cannot estimate $E_{sp}$ as easily since we cannot assume that the velocity head is zero upstream.

b) If the opening gets small, our assumption of constant specific energy gets less tenable due to friction.

 http://ingesolucionarios.blogspot.com

A *Venturi flume* is a region of a rectangular channel where the width has been deliberately decreased for the purpose of measuring the flow. Show that

$$Q^2 = \frac{2g(y_1 - y_2)}{[1/(b_2y_2)]^2 - [1/(b_1y_1)]^2}$$

*Hint*: Use Bernoulli at free surface.

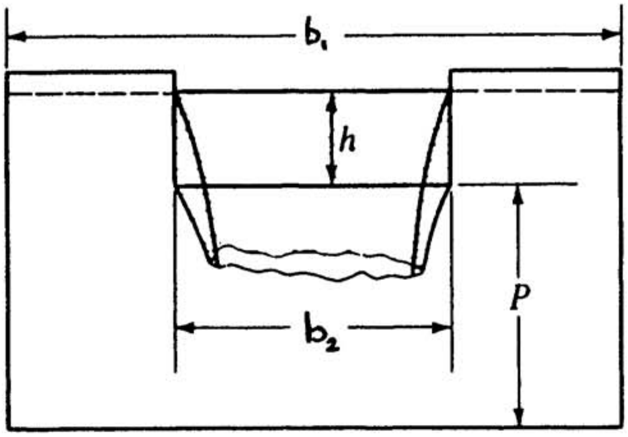


First law of thermo when friction is neglected--**Bernoulli** at the free surface.

$$\frac{V_1^2}{2g} + y_1 = \frac{V_2^2}{2g} + y_2$$

**Continuity** gives

$$b_1V_1y_1 = b_2V_2y_2 = Q$$

$$\therefore \quad V_1 = \frac{Q}{b_1y_1} \qquad V_2 = \frac{Q}{b_2y_2}$$

From Eq. (13.35) assuming no loss in $E_{sp}$ :

$$\frac{Q^2}{2\,b_1^2y_1^2g} + y_1 = \frac{Q^2}{2\,b_2^2y_2^2g} + y_2$$

Solving for $Q^2$ :

$$Q^2 = \frac{2g(y_2 - y_1)}{\left(\frac{1}{b_1y_1}\right)^2 - \left(\frac{1}{b_2y_2}\right)^2}$$

 http://ingesolucionarios.blogspot.com

Water is flowing in a rectangular channel of width 3 m, . The flow volume is 20 m³/s. What is the value of $y_2$ after the flow is made to go over an incline? Neglect friction and use Bernoulli along free surface, and continuity before the incline and after the incline. How would you decide which of the three roots is your valid one?

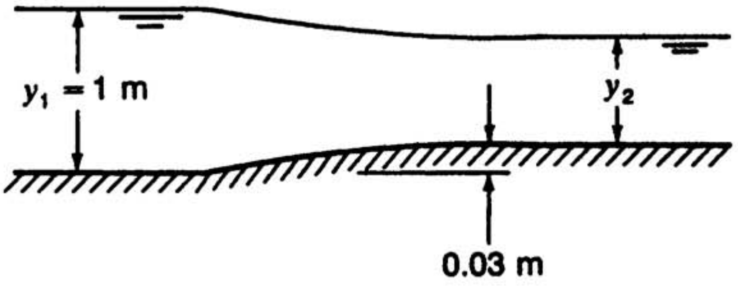


Use **Bernoulli** along free surface.

$$\frac{V_1^2}{2} + gy_1 + \frac{p_{atm}}{\rho} = \frac{V_2^2}{2} + g(y_2 + .03) + \frac{p_{atm}}{\rho}$$

$$\frac{V_1^2}{2} + 9.81 = \frac{V_2^2}{2} + (.03)(g) + gy_2 \qquad (1)$$

**Continuity** requires

$$y_1 V_1 = y_2 V_2 = \frac{20}{3}$$

$$\begin{cases} V_1 = \dfrac{\frac{20}{3}}{1} = 6.67 \quad m/s \\ V_2 = \dfrac{6.67}{y_2} \end{cases} \qquad (2)$$

Go to Eq. (1). Subst. for $V_1$ and $V_2$.

$$9.81 + \frac{6.67^2}{2} = \frac{6.67^2}{(2)(y_2^2)} + (.03)(9.81) + (9.81)y_2$$

http://ingesolucionarios.blogspot.com Edu_Zegarra_ch 

http://ingesolucionarios.blogspot.com

**(cont.)**

Multiply by $y_2^2$

$$31.76y_2^2 = 22.24 + 9.81y_2^3$$

$$\therefore\ y_2^3 - 3.238y_2^2 + 2.268 = 0$$

Determine three real roots for $y_2$. Discarding the negative result we get

$$y_2' = 1.009 \qquad y_2' = 2.983$$

You would examine the $y$ vs. sp. energy curve.

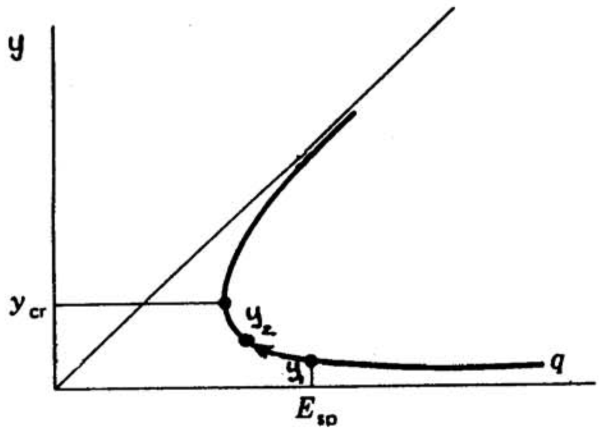


Since $E_{sp}$ must decrease, you cannot go above $y_{cr}$ to $y_2'$ since this would require an **increase** in $E_{sp}$ over part of flow.

Next compute $y_{cr}$

$$y_{cr} = \left(\frac{q^2}{g}\right)^{\frac{1}{3}} = \left[\frac{\left(\frac{20}{3}\right)^2}{9.81}\right]^{\frac{1}{3}} = 1.655\ m$$

Hence, the flow is shooting flow upstream and downstream and so $y_{cr} < y_2' > y_1$

$$y_2 = 1.009\ m$$

 http://ingesolucionarios.blogspot.com

Shown is flow in a wide channel over a parabolic bump. The flow $q$ is 5 $m^2/s$. Estimate $y(x)$ above the bump. We have steady frictionless flow.

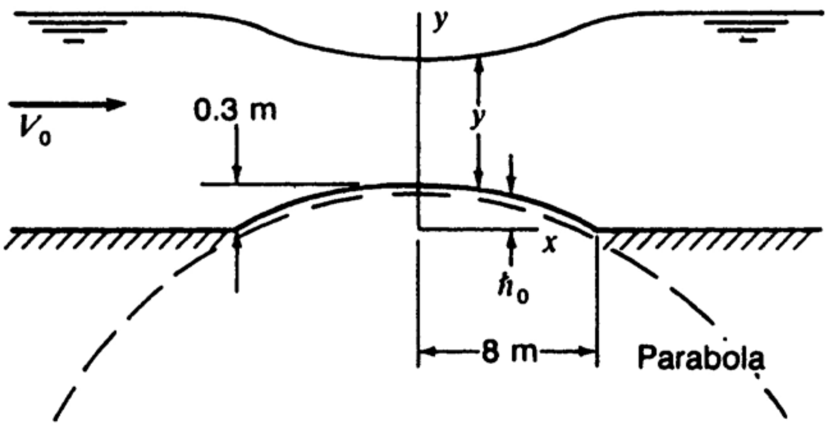


First we shall compute $\hbar_0(x)$ . For this parabola

$$(\hbar - .3) = C_1 x^2$$

Note first when $x = 0$ , $\hbar = .3$ as required. Also, when $x = 8$ , $\hbar = 0$ . Hence

$$-.3 = C_1(64) \qquad \therefore \quad C_1 = -4.688\times10^{-3}$$

Hence we can say

$$\hbar = .3 - 4.688\times10^{-3}x^2 \tag{1}$$

We shall now use **Bernoulli** along the **free surface**. Thus

$$\frac{V_0^2}{2} + (g)(3) + \frac{p_{atm}}{\gamma} = \frac{V^2}{2} + g(y + \hbar) + \frac{p_{atm}}{\gamma}$$

Take $d/dx$ of this equation.

$$V\frac{dV}{dx} + g\frac{dy}{dx} + g\frac{d\hbar}{dx} = 0 \tag{3}$$

Now **continuity** for steady flow requires

$$q = Vy = const.$$

$$\therefore \quad V\frac{dy}{dx} + y\frac{dV}{dx} = 0 \tag{4}$$

http://ingesolucionarios.blogspot.com

**(cont.)**

Solve for $(dV/dx)$ in (4) and substitute into (3). We get

$$V\left(-\frac{V}{y}\frac{dy}{dx}\right)+g\frac{dy}{dx}+g\frac{d\hbar}{dx}=0$$

Solving for $dy/dx$ we have

$$\frac{dy}{dx}=-\frac{\dfrac{d\hbar}{dx}}{1-\dfrac{V^2}{gy}} \qquad (5)$$

Go back to Eq. (1) to get $d\hbar/dx$. Thus

$$\frac{d\hbar}{dx}=-(4.688\times10^{-3})(2x)=-9.376\times10^{-3}x$$

Substitute into Eq. (5).

$$\frac{dy}{dx}=\frac{9.376\times10^{-3}x}{1-\dfrac{V^2}{gy}}$$

Let $V=\left(\frac{5}{y}\right)$. We then have

$$\frac{dy}{dx}=\frac{9.376\times10^{-3}x}{1-\left(\dfrac{2.548}{y^3}\right)}$$

Separate variables.

$$dy\left(1-\frac{2.548}{y^3}\right)=9.376\times10^{-3}x\,dx$$

Integrate

$$y-(2.548)\left(-\frac{1}{2}\right)y^{-2}=\frac{9.376\times10^{-3}}{2}x^2+C_1$$

Hence we have

$$y+\frac{1.274}{y^2}=\frac{9.376\times10^{-3}}{2}x^2+C_1 \qquad (6)$$

http://ingesolucionarios.blogspot.com Edu_Zegarr_ch

http://ingesolucionarios.blogspot.com

**(cont.)**

The **total head** $H_D$ computed upstream using the bed as a datum

$$H_D = \frac{V^2}{2g} + 0 + y = \frac{\left(\frac{5}{3}\right)^2}{(2)(9.81)} + 3 = 3.142 \; m$$

Now $H_D$ must be **conserved**, so going to position $x = 0$ we compute $E_{sp}(0)$ .

$$E_{sp}(0) = H_D - .3 = 3.142 - .3 = 2.842 \; m$$

Going to Eq. (13.48) we have at $x = 0$

$$E_{sp}(0) = \frac{V^2(0)}{2g} + y(0)$$

$$\therefore \; 2.842 = \frac{\left[\frac{5}{y(0)}\right]^2}{2g} + y(0)$$

Hence

$$y(0)^3 - 2.842 y_0^2 + 1.274 = 0 \tag{7}$$

Next compute $y_{cr}$ for the flow.

$$y_{cr} = \left(\frac{q^2}{g}\right)^{\frac{1}{3}} = \left(\frac{25}{9.81}\right)^{\frac{1}{3}} = 1.366 \; m$$

The flow upstream is **tranquil** flow.

http://ingesolucionarios.blogspot.com

Edu_Zegarr_ch

http://ingesolucionarios.blogspot.com

**(cont.)**

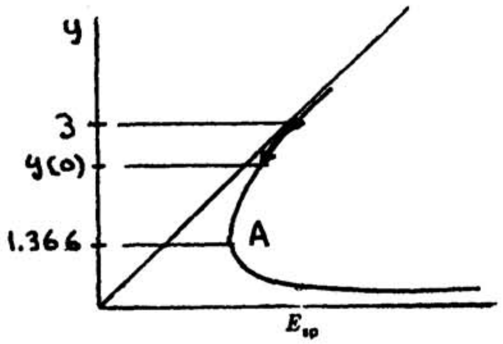


Clearly $y(0)$ must be between 1.366 and 3 . Now find $y(0)$ by trial and error from Eq. (7). We get

$$y(0) = 2.66 \ m$$

Now consider Eq. (6). At $x = 0$ , $y = 2.66$ .

$$2.66 - \frac{1.274}{2.66^2} = C_1$$

$$\therefore \quad C_1 = 2.48$$

$$\therefore \quad \boxed{y + \frac{1.274}{y^2} = 4.688 \times 10^{-3} x^2 + 2.48}$$



http://ingesolucionarios.blogspot.com Edu_Zegarr_ch

 http://ingesolucionarios.blogspot.com

Shown in Fig. P13.72 is a flow in a wide channel over a bump described as $h(x)$. We will neglect friction completely. If the bump is part of a circle given as

$$(h - 7.8)^2 + x^2 = 8^2 \qquad (a)$$

and the flow $q$ is 20 $m^2/s$, form the following equation for $y$ versus $x$:

$$y + \frac{20.39}{y^2} = -\sqrt{64 - x^2} + \text{const.} \qquad (b)$$

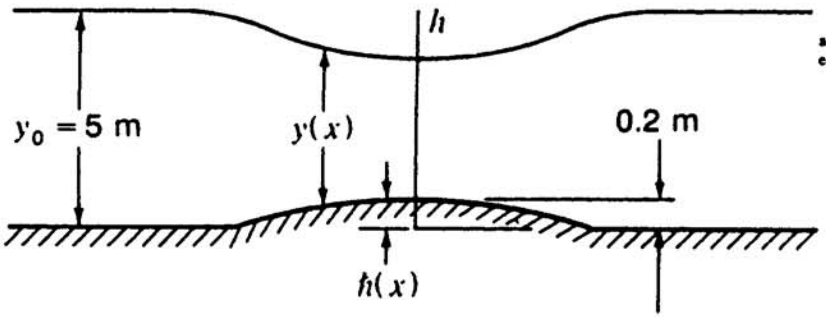


**Bernoulli** along free surface

$$\frac{V_0^2}{2} + (g)(5) + \frac{p_{atm}}{\rho} = \frac{V^2}{2} + g[y + h(x)] + \frac{p_{atm}}{\rho}.$$

Take $d/dx$ of this Eq.

$$V\frac{dV}{dx} + g\frac{dy}{dx} + g\frac{dh}{dx} = 0 \qquad (1)$$

**Continuity** $\qquad Vy = const.$

$$\therefore \quad \frac{dV}{dx}y + V\frac{dy}{dx} = 0 \qquad (2)$$

Solve for $dV/dx$ in (2). Subst. into (1).

$$\frac{dV}{dx} = -\frac{V}{y}\frac{dy}{dx}$$

$$\therefore \quad V\left(-\frac{V}{y}\frac{dy}{dx}\right) + g\frac{dy}{dx} + g\frac{dh}{dx} = 0$$

Solve for $dy/dx$ .

$$\frac{dy}{dx}\left(-\frac{V^2}{y} + g\right) = -g\frac{dh}{dx}$$

$$\frac{dy}{dx} = \frac{-\dfrac{dh}{dx}}{1 - \dfrac{V^2}{gy}}$$


http://ingesolucionarios.blogspot.com Edu_Zegarr_ch

http://ingesolucionarios.blogspot.com

**(cont.)**

Now $\hbar = \sqrt{8^2 - x^2} + 7.8$

$$\frac{d\hbar}{dx} = \frac{1}{2}(64 - x^2)^{-\frac{1}{2}}(-2x) = -\frac{x}{\sqrt{64-x^2}}$$

$$\therefore \quad \frac{dy}{dx} = \frac{\frac{x}{\sqrt{64 - x^2}}}{1 - \frac{V^2}{gy}}$$

But $$V = \frac{q}{y}$$

$$\therefore \quad \frac{dy}{dx} = \frac{\frac{x}{\sqrt{64 - x^2}}}{1 - \frac{\left(\frac{20}{y}\right)^2}{gy}}$$

$$\frac{dy}{dx} = \frac{\frac{x}{\sqrt{64 - x^2}}}{\left(1 - \frac{40.78}{y^3}\right)}$$

Separate variables

$$\left(1 - \frac{40.78}{y^3}\right)dy = \frac{x\,dx}{\sqrt{64 - x^2}}$$

Integrate

$$y - 40.78\,\frac{y^{-2}}{-2} = \left(-\sqrt{64 - x^2}\right) + Const.$$

$$\therefore \quad \boxed{y + \frac{20.39}{y^2} = -\sqrt{64 - x^2} + Const.}$$

http://ingesolucionarios.blogspot.com
13.73

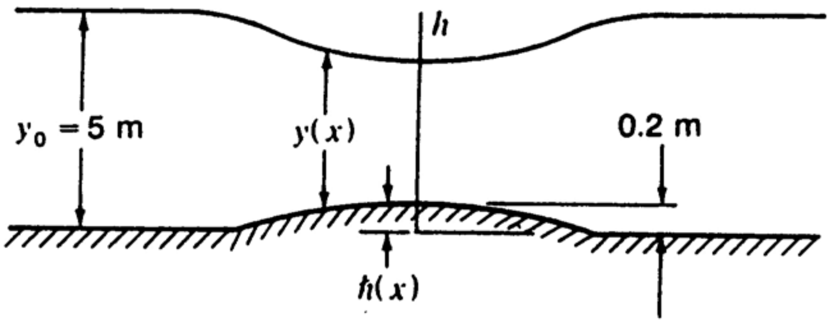


**Total head** $H_D$ (examine upstream at surface). Use gauge pressures.

$$H_D = \frac{V^2}{2g} + \frac{p}{\gamma} + (y + \hbar) \qquad (1)$$

$$H_D = \frac{\left[\frac{20}{5}\right]^2}{(2)(9.81)} + 0 + 5 = 5.815\ m$$

$H_D$ is **conserved**. At top of bump, we have for $(E_{sp})_{top}$ using Eq. (1 .34)

$$(E_{sp})_{x=0} = H_D - .2 = 5.815 - .2 = 5.615 \qquad (2)$$

Go to Eq. (13.48).

$$(E_{sp})_{x=0} = \frac{V^2(0)}{2g} + y(0)$$

$$(E_{sp})_{x=0} = \frac{\left[\frac{20}{y(0)}\right]^2}{2g} + y(0)$$

$$\therefore\ 5.615 = \frac{20.387}{[y(0)]^2} + y(0)$$

$$y^3(0) - 5.615[y(0)^2] + 20.387 = 0 \qquad (3)$$

http://ingesolucionarios.blogspot.com
**(cont.)**

Which $y(0)$ ? Compute $y_{cr}$

$$y_{cr} = \left(\frac{q^2}{g}\right)^{\frac{1}{3}} = \left(\frac{20^2}{9.81}\right)^{\frac{1}{3}} = 3.442\ m$$

$\therefore$ Flow upstream is tranquil flow.

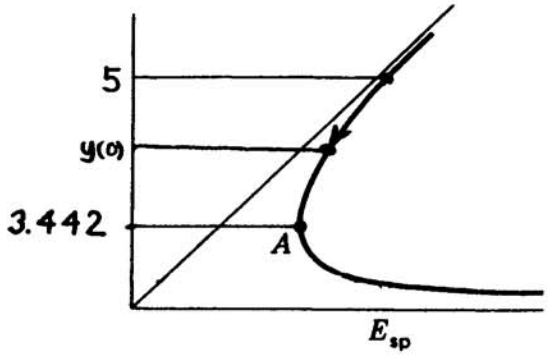


Since we cannot go around point $A$ as we go up to $x = 0$ from left, since $E_{sp}$ must be **decreasing** clearly we get $y(0)$ is between 3.442 and 5 . Solving for $y(0)$ from Eq. (3) we get:

$$y(0) = 4.69$$

Now go back to Eq. (6) in Problem 1.71.

$$y + \frac{20.39}{y^2} = -\sqrt{64 - x^2} + C_1$$

When $x = 0$ , $y = y(0) = 4.69\ m$

$$\therefore \quad \boxed{C_1 = 13.617}$$

http://ingesolucionarios.blogspot.com Edu_Zegarr_ch

 http://ingesolucionarios.blogspot.com

**Water enters a rectangular channel which is 3 ft wide at an average velocity of 0.8 ft/s and a depth of 3 in. The channel has an inclination $\alpha$ of 0.2°. If Manning's $n$ for the surface is 0.012, estimate at what distance $L$ along the channel the elevation will have risen to a depth of 4 in. Use $\Delta y = 0.2$ inches in your numerical calculation.**

$$R_H = \frac{by}{b+2y} = y$$

*INITIAL POINT* 1

$$\begin{cases} V_1 = .8\ ft/\text{sec} \\ (Fr)_1 = \dfrac{V\sqrt{b}}{\sqrt{gA}} = \dfrac{(.8)\sqrt{3}}{\sqrt{(g)(3)\left(\dfrac{1}{4}\right)}} = .28196 \\ \Delta y = \dfrac{.2}{12}\ ft \end{cases}$$

*POINT* 2

$$\begin{cases} V_2 = \dfrac{y_0(in)}{y_1(in)} V_1 = \dfrac{3}{3.2}(.8) = .750\ ft/\text{sec} \\ (Fr)_2 = \dfrac{(.750)\sqrt{3}}{\sqrt{(g)(3)\left(\dfrac{3.2}{12}\right)}} = .255951 \end{cases}$$

1-2

$$\begin{cases} (V_{1\text{-}2})_{av} = \dfrac{.8+.750}{2} = .775\ ft/\text{sec} \\ (Fr_{1\text{-}2})_{av} = \dfrac{.28196+.25595}{2} = .26896 \end{cases}$$

$$(\Delta L)_{1-2} = \frac{1-(.26896)^2}{.00349 - \left(\dfrac{.012}{1.486}\right)^2 \left(\dfrac{(.775)^2}{\left(\dfrac{3.1}{12}\right)^{\frac{4}{3}}}\right)} \left(\frac{.2}{12}\right) = 4.75424$$

http://ingesolucionarios.blogspot.com Edu_Zegarr_ch 

http://ingesolucionarios.blogspot.com

**(cont.)**

POINT 3

$$V_3 = \frac{3}{3.4}(.8) = .70588\ ft/\text{sec}$$

$$(Fr)_3 = \frac{.70588}{\left[g\left(\frac{3.4}{12}\right)\right]^{\frac{1}{2}}} = .23370$$

2–3

$$(V_{2\text{-}3})_{av} = \frac{.750 + .70588}{2} = .72794\ ft/\text{sec}$$

$$(Fr_{2\text{-}3})_{av} = \frac{.25595 + .23370}{2} = .24483$$

$$(\Delta L)_{2\text{-}3} = \frac{1-(.24483)^2}{.00349 - \left(\frac{.012}{1.486}\right)^2\left(\frac{.72794^2}{\left(\frac{3.3}{12}\right)^{\frac{4}{3}}}\right)}\left(\frac{.2}{12}\right) = 4.75241\ ft$$

POINT 4

$$V_4 = \frac{3}{3.6}(.8) = .667$$

$$(Fr)_4 = \frac{.667}{\sqrt{(g)\left(\frac{3.6}{12}\right)}} = .21450$$

3–4

$$(V_{3\text{-}4})_{av} = \frac{.70588 + .667}{2} = .68628$$

$$(Fr_{3\text{-}4})_{av} = \frac{.23370 + .21450}{2} = .22410$$

$$(\Delta L)_{3\text{-}4} = \frac{1-(.22410)^2}{.00349 - \left(\frac{.012}{1.486}\right)^2\left(\frac{(.68628)^2}{\left(\frac{3.5}{12}\right)^{\frac{4}{3}}}\right)}\left(\frac{.2}{12}\right) = 4.75190\ ft.$$

$$(\Delta L)_{3\text{-}4} = 4.75190\ ft$$

http://ingesolucionarios.blogspot.com

**(cont.)**

POINT 5

$$V_5 = \frac{3}{3.8}(.8) = .63158$$

$$(Fr)_5 = \frac{.63158}{\sqrt{(g)\left(\frac{3.8}{12}\right)}} = .19779$$

4–5

$$(V_{4\text{-}5})_{av} = \frac{.667+.63158}{2} = .64914 \; ft/\text{sec}$$

$$(Fr_{4\text{-}5})_{av} = \frac{.21450+.19779}{2} = .20615$$

$$(\Delta L)_{4-5} = \frac{1-.20615^2}{.00349 - \left(\frac{.012}{1.486}\right)^2\left(\frac{(.64914)^2}{\left(\frac{3.7}{12}\right)^{\frac{4}{3}}}\right)}\left(\frac{.2}{12}\right) = 4.75216 \; ft$$

POINT 6

$$V_6 = \frac{3}{4}(.8) = .6 \; ft/\text{sec}$$

$$(Fr)_6 = \frac{.6}{\left[g\left(\frac{4.0}{12}\right)\right]^{\frac{1}{2}}} = .18314$$

5–6

$$(V_{5\text{-}6})_{av} = \frac{.63158+.6}{2} = .61579 \; ft/\text{sec}$$

$$(Fr_{5\text{-}6})_{av} = \frac{.19779+.18314}{2} = .19047$$

$$(\Delta L)_{5-6} = \frac{1-.19047^2}{.00349 - \left(\frac{.012}{1.486}\right)^2\left(\frac{.61579^2}{\left(\frac{3.9}{12}\right)^{\frac{4}{3}}}\right)}\left(\frac{.2}{12}\right) = 4.75301 \; ft$$

*TOTAL LENGTH* = **23.76 ft**

http://ingesolucionarios.blogspot.com Edu_Zegarr_ch

http://ingesolucionarios.blogspot.com

13.75

In Example 13.10 compute the distance $L$ in one calculation where the free surface has a depth of 3.6 m. Do not average.

$y_1 = 3.0\ m \qquad y_2 = 3.6\ m \qquad \text{find} \qquad \Delta L$

In Eq. (13.69) use values at $y_1 = 3.0\ m$ . Do not average.

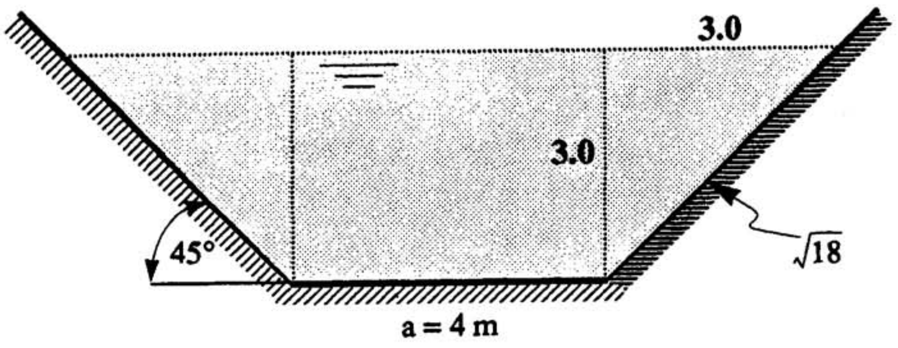


$Q = 35\ m^3/s \qquad A = (3)(4)+9 = 21\ m^2$

$b = 10\ m \qquad P = 2\sqrt{18} + 4 = 12.49\ m$

$P_H = 1.6820\ m$

$$\Delta L = \frac{1 - \left(\frac{(35)^2(10)}{g(21)^3}\right)}{.001 - \left(\frac{.012}{1}\right)^2 \left(\frac{(35)^2}{(1.6820)^{\frac{4}{3}}(21)^2}\right)}(.6)$$

$L = $ **649 m**

 http://ingesolucionarios.blogspot.com

Do Prob. 13.75 using a linear average in the calculations. If in the preceding problem $\Delta L = 649$ m, what is the percent error in not averaging?

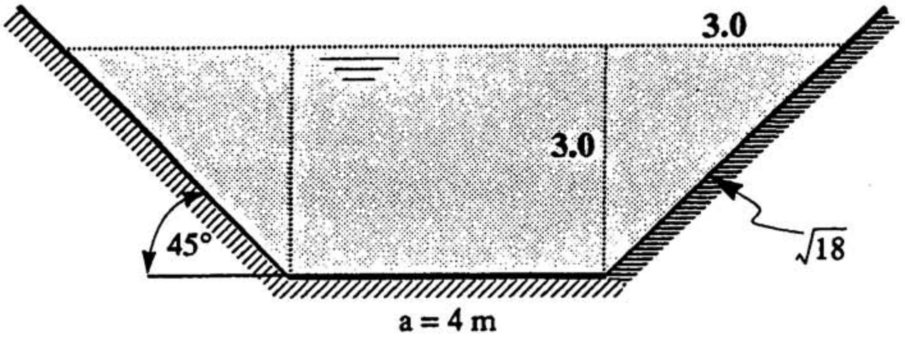


At the section of interest, $y = 3.6$ ,

$$Q = 35\ m^3/\text{sec} \quad A = 27.36\ m^2 \quad b = 11.20\ m \quad P = 14.184\ m$$

At $y = 3\ m$ , we have:

$$Q = 35\ m^3/\text{sec} \quad A = 21\ m^2 \quad b = 4+(2)(3) = 10\ m \quad P = 4+(2)\left(\frac{3}{.707}\right) = 12.487\ m$$

The average:

$$A_{av} = \frac{27.36+21}{2} = 24.18\ m^2$$

$$b_{av} = \frac{10+11.20}{2} = 10.60\ m$$

$$P_{av} = \frac{14.184+12.487}{2} = 13.335\ m$$

Go to Eq. (13.69).

$$\Delta L = \frac{1 - \dfrac{(35^2)(10.60)}{(9.81)(24.18)^3}}{.001 - \left(\dfrac{.012}{1}\right)^2 \dfrac{35^2}{\left(\dfrac{24.18}{13.3355}\right)^{\frac{4}{3}}(24.18)^2}}(.6) = 630\ m$$

$$Error = \frac{19}{649}(100) = \boxed{2.93\%}$$

A wide channel is made of finished concrete. It has a slope $S_0$ equal to 0.0003. The opening from a large reservoir to the channel is a sharp-edged sluice gate. The coefficient of contraction $C_c$ is 0.80 and the coefficient of friction $C_f$ is 0.85. What is the approximate depth at the vena contracta and the flow $q$ of fluid? How far from the vena contracta does the water increase depth by 30 mm? Use one calculation with linear averages.

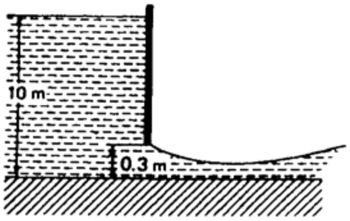


Height at Vena Contracta is:

$$y_2 = (.3)(.80) = .24 \ m$$

Now use **Bernoulli** between free surfaces in tank and at $y_2$ . Neglect K.E. at free surface in tank.

$$10 = \frac{V_2^2}{2g} + .24$$

$$V_2 = \sqrt{(10-.24)(2g)} = 13.84 \ m/s$$

$$q_{theo} = (13.84)(1)(.24) = 3.32 \ m^2/\text{sec}$$

$$q_{act} = (.85)(3.32) = 2.82 \ m^2/\text{sec}$$

Find $\Delta L$ .

$$\Delta L = \frac{1 - \dfrac{(q_{act})^2)(1)}{gy^3}}{S_0 - \left(\dfrac{n}{\kappa}\right)^2 \dfrac{q^2}{y^{\frac{4}{3}}(1)^2(y)^2}} \quad \Delta y$$

Downstream $y = .24 + .03 = .27$

$$\therefore \quad \Delta L = \frac{1 - \dfrac{(2.82)^2}{(g)(.27)^3}}{.0003 - \left(\dfrac{.012}{1}\right)^2 \dfrac{2.82^2}{(.27)^{\frac{10}{3}}}} (.03) = \boxed{13.44 \ m}$$

13.78 http://ingesolucionarios.blogspot.com

In Prob. 13.70, take the channel to be horizontal. For a decrease in depth of $\frac{1}{2}$ in, compute the distance $L$ analytically without the use of numerical methods.

We can use Eq. (13.71) since we can consider the channels to be wide.

$$L = \left(\frac{\kappa}{n}\right)^2 \left[\frac{3}{4g}\left(y^{\frac{4}{3}} - y_0^{\frac{4}{3}}\right) - \frac{3}{13q^2}\left(y^{\frac{13}{3}} - y_0^{\frac{13}{3}}\right)\right]$$

Let $y_0 = \frac{3}{12}\ ft = .25\ ft$

$$y = \frac{2.5}{12}\ ft = .2083\ ft$$

$$L = \left(\frac{1.486}{.012}\right)^2 \left\{\frac{3}{(4)(32.2)}\left[(.2083)^{\frac{4}{3}} - (.25)^{\frac{4}{3}}\right] - \frac{3}{(13)\left[(.8)\left(\frac{1}{4}\right)\right]^2}\left[(.2083)^{\frac{13}{3}} - (.25)^{\frac{13}{3}}\right]\right\} = \boxed{106.8\ ft}$$

13.79

Water is moving at a speed of 4 m/s in a very wide horizontal channel at a depth of 1 m. If $n = 0.025$ for earth in good condition, at what distance $L$ downstream will the depth increase to 1.1 m? Do problem analytically without numerical methods.

$$L = \left(\frac{\kappa}{n}\right)^2 \left[\frac{3}{4g}\left(y^{\frac{4}{3}} - y_1^{\frac{4}{3}}\right) - \frac{3}{13q^2}\left(y^{\frac{13}{3}} - y_1^{\frac{13}{3}}\right)\right]$$

$$= \left(\frac{1}{.025}\right)^2 \left[\frac{3}{(4)(9.81)}\left(1.1^{\frac{4}{3}} - 1^{\frac{4}{3}}\right) - \frac{3}{(13)[(4)(1)]^2}\left(1.1^{\frac{13}{3}} - 1^{\frac{13}{3}}\right)\right] = \boxed{4.77\ m}$$

13.80

In a wide horizontal rectangular earth channel with weeds and stones, it is observed that the depth rises 0.2 m from a depth of 1 m in a distance of 6 m. What is the volumetric flow per unit width?

We use Eq. (13.71).

$$x = \left(\frac{\kappa}{n}\right)^2 \left[\frac{3}{4g}\left(y^{\frac{4}{3}} - y_1^{\frac{4}{3}}\right) - \frac{3}{13q^2}\left(y^{\frac{13}{3}} - y_1^{\frac{13}{3}}\right)\right]$$

$$6 = \left(\frac{1}{.035}\right)^2 \left[\frac{3}{(4)(9.81)}\left(1.2^{\frac{4}{3}} - 1^{\frac{4}{3}}\right) - \frac{3}{13q^2}\left(1.2^{\frac{13}{3}} - 1^{\frac{13}{3}}\right)\right]$$

Solve for $q$ .

$$q = \boxed{4.50\ m^2/s}$$

 http://ingesolucionarios.blogspot.com

We first determine the velocity at $B\text{–}B$ . Using **Bernoulli's** equation and gauge pressures between the free surface in this tank and at $B\text{–}B$ we have:

We have shown a large reservoir of water to which is connected a triangular channel of uniform cross section, as shown in view *B-B*. We may take *n* for this channel as 0.012. The water enters the channel by a well-rounded opening of height 3 in, as shown in view *B-B* in the diagram. If steady flow is established, sketch the free-surface profile as per one of the curves in Fig. 13.22. The angle $\theta = 2°$.

$$2 = \frac{V^2}{2g}$$

$$\therefore \quad V = \sqrt{2g\ 2} = 11.35\ ft/sec$$

To get $y_N$ go to Eq. (13.10) .

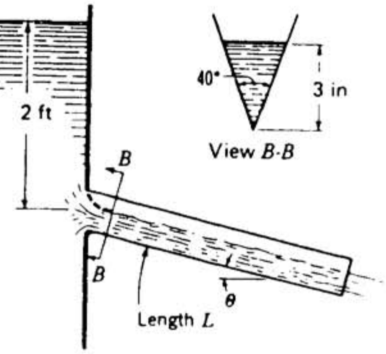


$$V = \left(\frac{\kappa}{n}\right) R_H^{\frac{2}{3}} \sqrt{S_0}$$

$$\therefore \quad (11.35) = \left(\frac{1.486}{.012}\right)\left[\frac{(\tan 20°)(y_N^2)}{\frac{(2)(y_N)}{\cos 20°}}\right]^{\frac{2}{3}} \sqrt{.0349}$$

$$y_N = 2.0096\ ft$$

To get the **critical depth** we go to Eq. (13.49):

$$\frac{bQ^2}{gA^3} = 1$$

$$\frac{(b)\left[(11.35)\left(\frac{1}{2}\right)(b)(y)\right]^2}{(g)\left[\left(\frac{1}{2}\right)(b)(y)\right]^3} = 1$$

$$\frac{\left(\frac{11.35}{2}\right)^2}{(g)\left(\frac{1}{2}\right)^3 y} = 1$$

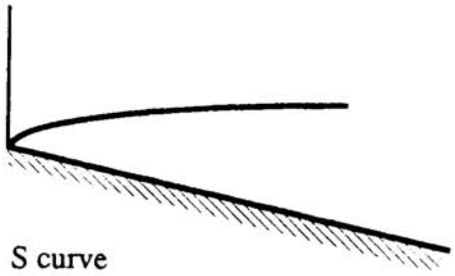

S curve

$$\therefore \quad \boxed{y_{cr} = 8.001393\ ft}$$

http://ingesolucionarios.blogspot.com 

 http://ingesolucionarios.blogspot.com

In Prob 13.81, estimate the distance along the channel at which the depth becomes 4 in. Get an estimate in one calculation using only initial data and not averaging.

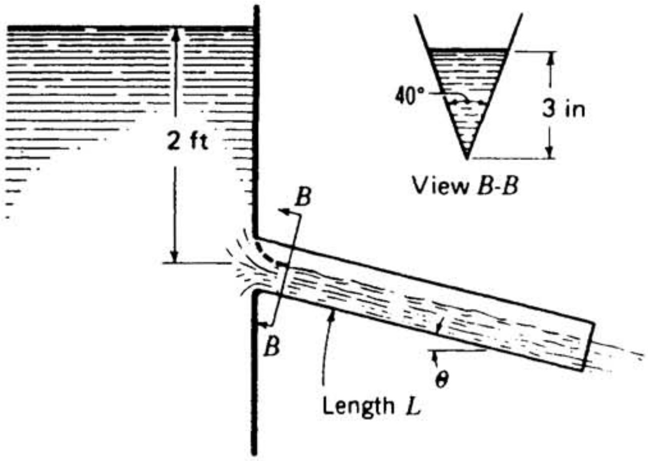


Go to Eq. (13.69).

$$\Delta L = \frac{1 - \dfrac{Q^2 b}{gA^3}}{S_0 - \left(\dfrac{n}{\kappa}\right)^2 \dfrac{Q^2}{R_H^{\frac{4}{3}} A^2}} \left(\frac{1}{12}\right)$$

**At outset.**

$$Q = \left(\sqrt{2gh}\right)(A) = (11.35)\left(\frac{1}{2}\right)\left(\frac{3}{12}\right)(2)\left(\frac{3}{12}\right)(\tan 20°) = .25819 \ cfs$$

**At desired position:**

$$A_2 = \left(\frac{1}{2}\right)\left(\frac{4}{12}\right)(2)\left(\frac{4}{12}\right)(\tan 20°) = .04044 \ ft^2$$

$$b_2 = 2\left(\frac{4}{12}\right)\tan 20° = .243 \ ft$$

$$\therefore \quad \Delta L = \frac{[1 - (.25819)^2(.243)/(32.2)(.04044)^3]}{\left\{.03490 - \left(\dfrac{.012}{1.486}\right)^2 \left[\left(\dfrac{.04044}{(2)\left(\frac{4}{12}\right)/\cos 20°}\right)^{-\frac{4}{3}} (.25819)^2\right] / (.04044)^2\right\}} \left(\frac{1}{12}\right)$$

$$\Delta L = \boxed{6.38 \ ft}$$

 http://ingesolucionarios.blogspot.com

In Example 13.1, for a flow of 5000 ft³/s at the geometry shown initially, at what distance downstream is the depth at an elevation of 14 ft? Use initial data and do not average. Do in one calculation.

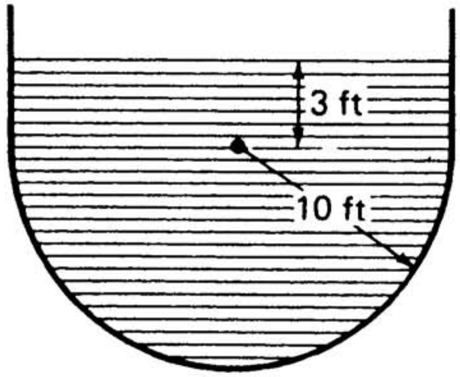


$$Q = 5{,}000 \ cfs$$

$$R_H = 5.80 \ ft$$

$$n = .012$$

$$S_0 = .0016$$

$$b = 20 \ ft$$

$$A = \frac{1}{2}\pi(10)^2 + 60 = 217.1 \ ft^2$$

Using Eq. (13.69):

$$\Delta L = \frac{1 - \dfrac{(5{,}000)^2(20)}{(32.2)(217.1)^3}}{.0016 - \left(\dfrac{.012}{1.486}\right)^2 \dfrac{(5{,}000)^2}{(5.80)^{\frac{4}{3}}(217.1)^2}}(1) = 301 \ ft$$

 http://ingesolucionarios.blogspot.com

Do Prob. 13.83 using a linear average over the interval. Compare results with $\Delta L = 301$ ft from the preceding problem not involving an average. Use one cycle of calculation. What is the error in not averaging in this problem?

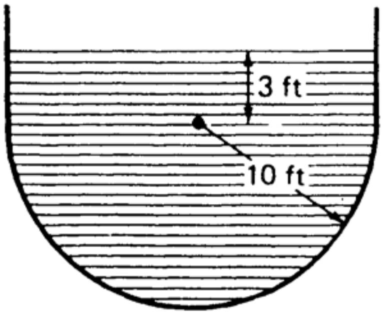


At $\Delta L = 300\ ft$ and $y = 14\ ft$

$$Q = 5{,}000\ cfs$$

$$R_H = \frac{\left(\frac{1}{2}\right)\pi(10^2) + (20)(4)}{\pi(10) + (2)(4)} = 6.015\ ft$$

$$A = \left(\frac{1}{2}\right)\pi(10^2) + (20)(4) = 237.1\ ft^2$$

$$b = 20\ ft$$

From previous problem:

$$R_H = 5.80\ ft$$

$$A = 217.1\ ft^2$$

$$b = 20\ ft$$

Use linear average.

$$(R_H)_{av} = \left(\frac{1}{2}\right)(5.804 + 6.015) = 5.9075\ ft$$

$$(A)_{av} = \left(\frac{1}{2}\right)(237.1 + 217.1) = 227.1\ ft^2$$

Go to Eq. (13.69).

$$\Delta L = \frac{1 - \frac{(5{,}000)^2(20)}{(32.2)(227.1)^3}}{.0016 - \left(\frac{.012}{1.486}\right)^2 \frac{5{,}000^2}{(5.9075)^{\frac{4}{3}}(227.1)^2}}(1) = \boxed{239.5\ ft}$$



http://ingesolucionarios.blogspot.com Edu_Zegarr_ch

 http://ingesolucionarios.blogspot.com

In Example 13.1, find the free-surface profile as the water rises 1 ft from that at the outset. Use five intervals and use average data. The flow $Q$ is 5000 ft$^3$/s.

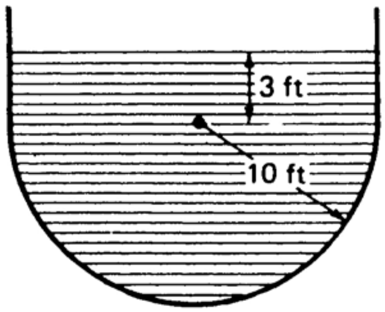


$$Q = 5{,}000 \ cfs$$

$$(R_H)_1 = 5.80 \ ft$$

$$n = .012$$

$$S_0 = .0016$$

$$b = 20 \ ft$$

$$(A)_1 = \left(\frac{1}{2}\right)\pi(10^2) + 60 = 217 \ ft^2$$

Choose $\Delta y = .2$ , $y = 13.2 \ ft$

$$\begin{cases} (R_H)_2 = \dfrac{\left(\frac{1}{2}\right)(\pi)(10^2)+(20)(3.2)}{(\pi)(10)+(2)(3.2)} = 5.846 \\ (A)_2 = \left(\frac{1}{2}\right)\pi(10^2)+(20)(3.2) = 221.08 \end{cases}$$

**First interval 1-2.**

$$\begin{cases} (R_H)_{av} = \dfrac{5.80 + 5.8462}{2} = 5.8231 \ ft \\ (A)_{av} = \dfrac{217+221.08}{2} = 219 \ ft \end{cases}$$

$$(\Delta L)_{1-2} = \frac{1 - \dfrac{(5{,}000)^2(20)}{(32.2)(219)^3}}{.0016-\left(\dfrac{.012}{1.486}\right)^2 \dfrac{(5{,}000)^2}{(5.8231)^{\frac{4}{3}}(219)^2}}(.2) = 58.171 \ ft$$



http://ingesolucionarios.blogspot.com Edu_Zegarr_ch

(cont.)

$$\begin{cases} (R_H)_3 = \dfrac{\left(\dfrac{1}{2}\right)\pi(10^2)+20(3.4)}{\pi(10)+(2)(3.4)} = 5.8897\ ft \\ (A)_3 = 225.1\ ft^2 \end{cases}$$

**Second interval 2-3.**

$$\begin{cases} (R_H)_{av} = \dfrac{5.8897+5.8462}{2} = 5.8680\ ft \\ (A)_{av} = \dfrac{221.08+225.1}{2} = 223.09\ ft^2 \end{cases}$$

$$(\Delta L)_{2-3} = \frac{1 - \dfrac{(5{,}000)^2(20)}{(32.2)(223.09)^3}}{.0016-\left(\dfrac{.012}{1.486}\right)^2 \dfrac{5{,}000^2}{(5.8680)^{\frac{4}{3}}(223.09)^2}}(.2) = 53.3188\ ft$$

$$\begin{cases} (R_H)_4 = \dfrac{\left(\dfrac{1}{2}\right)\pi(10^2)+(20)(3.6)}{(\pi)(10)+(2)(3.6)} = 5.932\ ft \\ (A)_4 = 229.08\ ft^2 \end{cases}$$

**Third interval 3-4.**

$$\begin{cases} (R_H)_{av} = \dfrac{5.8897+5.932}{2} = 5.9110\ ft \\ (A)_{av} = \dfrac{225.1+229.08}{2} = 227.09\ ft^2 \end{cases}$$

$$(\Delta L)_{3-4} = \frac{1 - \dfrac{(5{,}000)^2(20)}{(32.2)(223.09)^3}}{.0016-\left(\dfrac{.012}{1.486}\right)^2 \dfrac{5{,}000^2}{(5.9110)^{\frac{4}{3}}(227.09)^2}}(.2) = 47.998\ ft$$

http://ingesolucionarios.blogspot.com

(cont.)

$$\begin{cases} (R_H)_5 = \dfrac{\left(\dfrac{1}{2}\right)(\pi)(10^2)+(20)(3.8)}{(\pi)(10)+(2)(3.8)} = 5.9740 \\ (A)_5 = 233.08\ ft^2 \end{cases}$$

**Fourth interval 4-5.**

$$\begin{cases} (R_H)_{av} = \dfrac{5.9740+5.9320}{2} = 5.9530\ ft \\ (A)_{av} = \dfrac{233.08+229.08}{2} = 231.08\ ft^2 \end{cases}$$

$$(\Delta L)_{4-5} = \frac{1 - \dfrac{(5{,}000)^2(20)}{(32.2)(223.08)^3}}{.0016 - \left(\dfrac{.012}{1.486}\right)^2 \dfrac{5{,}000^2}{(5.9530)^{\frac{4}{3}}(231.08)^2}} (.2)$$

$$\begin{cases} (\Delta L)_{4-5} = 42.03\ ft \\ (R_H)_6 = \dfrac{\left(\dfrac{1}{2}\right)\pi(10^2)+(20)(4)}{\pi(10)+(2)(4)} = 6.0148\ ft \\ (A)_6 = 237.08\ ft^2 \end{cases}$$

**Fifth interval 5-6.**

$$\begin{cases} (R_H)_{av} = \dfrac{5.9740 + 6.0148}{2} = 5.9944\ ft \\ (A)_{av} = \dfrac{233.08+237.08}{2} = 235.08\ ft^2 \end{cases}$$

$$(\Delta L)_{5-6} = \frac{1 - \dfrac{(5{,}000)^2(20)}{(32.2)(235.08)^3}}{.0016-\left(\dfrac{.012}{1.486}\right)^2 \dfrac{5{,}000^2}{(5.9944)^{\frac{4}{3}}(235.08)^2}} (.2) = 35.210\ ft$$

$$(\Delta L)_{TOTAL} = 237\ ft$$

In Prob. 14.79 sketch the free-surface profile.

$$y_N = \infty$$

$$y_C = \left(\frac{q^2}{g}\right)^{\frac{1}{3}} = \left(\frac{4^2}{9.81}\right)^{\frac{1}{3}} = 1.1771 \ m$$

$$\begin{cases} y = 1 \ m \\ y_N = \infty \\ y_C = 1.1771 \ m \end{cases}$$

From Fig. 13.21(a) we see that we have curve $H_2$ .

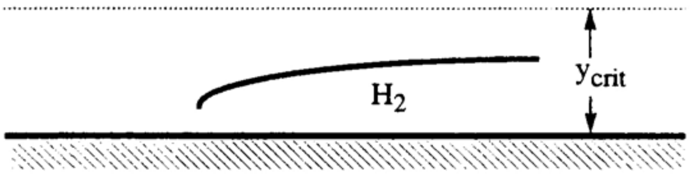

In Example 13.1, there is a flow of 5000 ft³/s at the geometry shown initially. Sketch the free-surface profile downstream for steady flow.

$$Q = 5{,}000 \ cfs$$

$$R_H = \frac{\dfrac{\pi(10)^2}{2} + (y-10)(20)}{(\pi)(10) + 2(y-10)} = \frac{20y - 42.92}{2y + 11.416}$$

$$b = 20 \ ft$$

$$A = 20y - 42.92 \ ft^2$$

**Get** $y_N$ . Go to Eq. (13.11).

$$Q = \left(\frac{\kappa}{n}\right) R_H^{\frac{2}{3}} \sqrt{S_0}\, A$$

$$5{,}000 = \left(\frac{1.486}{.012}\right)\left(\frac{20y_N - 42.92}{2y_N + 11.416}\right)^{\frac{2}{3}} \sqrt{.0016}\ (20y_N - 42.92)$$

$$1{,}009 = \frac{(20y_N - 42.92)^{\frac{5}{3}}}{(2y_N + 11.416)^{\frac{2}{3}}}$$

Solve by trial and error.

$$y_N = 16.65 \ ft$$

Get $y_{cr}$ [Eq. (13.49)].

$$\frac{bQ^2}{gA^3} = 1$$

$$\frac{(20)(5{,}000)^2}{(g)(20y_{cr} - 42.92)^3} = 1 \qquad y_{cr} = 14.62 \ ft$$

$$\begin{cases} y = 13 \ ft \\ y_{cr} = 14.62 \ ft \\ y_N = 16.65 \ ft \end{cases}$$

This is curve $M_3$ . From Fig. 13.21(b),

 http://ingesolucionarios.blogspot.com

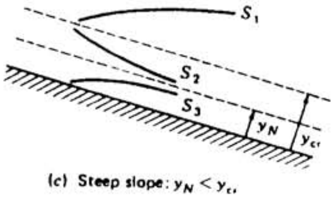


(c) Steep slope: $y_N < y_{cr}$

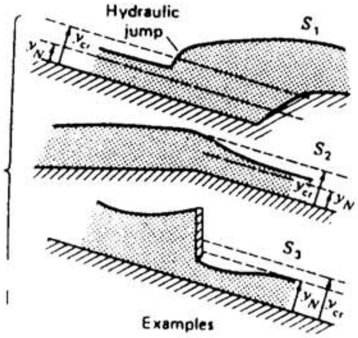


Justify the curves shown in Fig. 13.22c.

We consider Eq. (13.76).

$$\frac{dy}{dx} = \frac{S_0\left[1 - \left(\frac{y_N}{y}\right)^{\frac{10}{3}}\right]}{1 - Fr^2}$$

**Take** $y > y_{cr} > y_N$

∴ a) Subcritical flow. $Fr < 1$

b) $\left(\frac{y_N}{y}\right)^{\frac{10}{3}} < 1$

Hence $dy/dx$ is positive → $S_1$

**Take** $y > y_N$ ; $y < y_{cr}$

a) Supercritical flow $Fr > 1$

b) $\left(\frac{y_N}{y}\right)^{\frac{10}{3}} < 1$

Hence $dy/dx$ is negative → $S_2$

**Take** $y < y_N < y_{cr}$

a) Supercritical flow $Fr > 1$

b) $\left(\frac{y_N}{y}\right)^{\frac{10}{3}} > 1$

Hence $dy/dx$ is positive → $S_3$

 http://ingesolucionarios.blogspot.com

Water is flowing along a riveted triangular channel having a 60° angle at the rate of 100 ft³/s. The slope of the channel is 0.008. If $y$ at one section in the channel is 4.00 m, what is the flow profile identification directly after the section? Do the same for $y = 5.5$ m.

$$n = .015$$

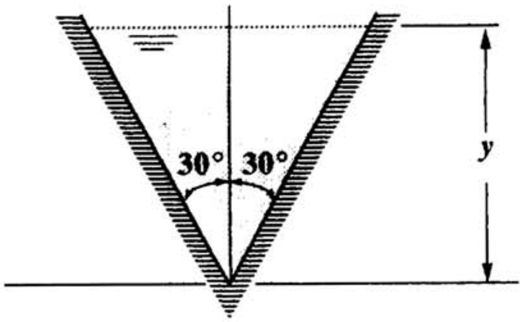


$$R_H = \frac{A}{P} = \frac{\frac{1}{2}(y)(y\tan 30°)(2)}{2\left(\frac{y}{\cos 30°}\right)} = .250\ y$$

Go to Eq. (13.10)

$$Q = \frac{\kappa}{n} R_H^{\frac{2}{3}} \sqrt{S_0}\,(A_N)$$

$$100 = \frac{1}{.015}(.250 y_N)^{\frac{2}{3}} \sqrt{.008}\,(y_N^2 \tan 30°)$$

$$\therefore \quad y_N^{\frac{8}{3}} = 73.198$$

$$y_N = 5.003\ m$$

Go to Eq. (13.49).

$$\frac{(2\,y_{cr}\tan 30°)(100)^2}{(9.81)(y_{cr}^2\tan 30°)^3} = 1$$

$$9.81 y_{cr}^5 \tan^3 30° = 2\tan 30°(100)^2$$

$$y_{cr} = 5.719\ m$$

Case (a). $y = 4.00\ m$

http://ingesolucionarios.blogspot.com 

http://ingesolucionarios.blogspot.com
**(cont.)**

$y_N < y_{cr}$ ∴ Steep Slope

$\begin{cases} y < y_{cr} \\ y < y_N \end{cases}$ ∴ **$S_3$ profile**

Case (b). $y = 5.5$

$y_N < y_{cr}$ ∴ Steep Slope

$\begin{cases} y > y_N \\ y < y_{cr} \end{cases}$ ∴ **$S_2$ profile**

Water is flowing in a wide rectangular channel having a slope $S_0 = 0.0008$. The flow rate $q$ is 10 m$^2$/s. The channel is concrete with $n = 0.02$. If at the outset $y = 3$ m, what is the flow profile identification for gradually varied flow? Do the same for $y = 1$ m.

For this channel $n = .02$

$$y_{cr} = \left(\frac{q^2}{g}\right)^{\frac{1}{3}} = \left[\frac{(10)^2}{9.81}\right]^{\frac{1}{3}} = 2.168 \ m$$

For $b \gg y$ ,

$$R_H = \frac{A}{P} = \frac{(b)(y)}{b+2y} = y \ m$$

From Eq. (1 12)

$$y_N = \left[\frac{nq}{\kappa\sqrt{S_0}}\right]^{\frac{3}{5}} = \left[\frac{(.02)(10)}{(1)(\sqrt{.0008}}\right]^{\frac{3}{5}} = 3.234$$

a) $y_N > y_{cr}$ $\therefore$ **Mild Slope**

$\begin{cases} y < y_N \\ y > y_{cr} \end{cases}$ $\therefore$ **$M_2$ profile**

b) $y_N > y_{cr}$ $\therefore$ **Mild Slope**

$\begin{cases} y < y_N \\ y < y_{cr} \end{cases}$ $\therefore$ **$M_3$ profile**

 http://ingesolucionarios.blogspot.com

Water is flowing in a hexagonal channel lined with asphalt. The sides are 3 m having only a base and two sides. The slope is 0.005. If the flow rate $Q$ is 15 $m^3/s$, is the slope mild or steep? What ranges of depth should the flow be for types 1, 2, and 3?

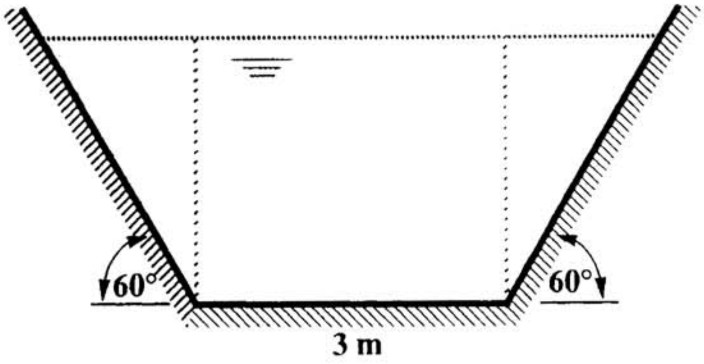


From Eq. (13.49) for critical flow,

$$\frac{bQ^2}{g\,A_{cr}^3} = 1$$

$$\frac{[3 + (2)(y_{cr})\tan 30°](15^2)}{(9.81)[3y_{cr} + (y_{cr})(y_{cr}\tan 30°)]^3}$$

$$(225)(3 + 1.155y_{cr}) = (9.81)[(3y_{cr} + .577y_{cr}^2)]^3$$

$$22.94(3 + 1.155y_{cr}) = [(3y_{cr} + .577y_{cr}^2)]^3$$

Solve by trial and error.

$$y_{cr} = 1.255 \ m$$

Go to Eq. (13.10)

$$Q = \frac{\kappa}{n} R_H^{\frac{2}{3}} \sqrt{S_0}\, A_N$$

http://ingesolucionarios.blogspot.com

$$R_H = \frac{3y + .577y^2}{3 + \dfrac{2y}{\cos 30°}} = \frac{3y + .577y^2}{3 + 3.209\,y}$$

$$\therefore \quad 15 = \frac{1}{.016}\left[\frac{3y_N + .577y_N^2}{3 + 3.209\,y}\right]^{\frac{2}{3}} \sqrt{.005}\,(3y_N + .577y^2)$$

$$3.394 = \left[\frac{3y_N + .577y_N^2}{3 + 3.209\,y}\right]^{\frac{2}{3}} (3y_N + .577y_N^2)$$

Solve by trial and error.

$$y_N = 1.1316\ m$$

Note $y_N < y_{cr}$ . $\therefore$ We have **steep slope**.

$$\begin{cases} \text{For } S_1 & y > 1.255\ m \\ \text{For } S_2 & 1.1316 < y < 1.255 \\ \text{For } S_3 & y < 1.1316 \end{cases}$$


http://ingesolucionarios.blogspot.com Edu_Zegarr_ch

Water is flowing in a brick rectangular channel of width 20 ft. The slope is 0.001 and the volume flow $Q$ is 100 ft$^3$/s. Is the slope mild or steep? What are the ranges of depth for types 1, 2, and 3 flows?

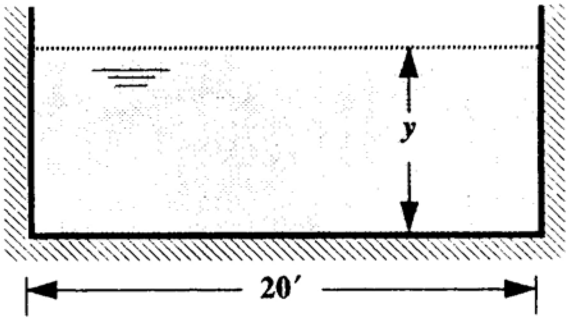


$$R_H = \frac{20y}{20 + 2y} = \frac{10y}{10 + y}$$

For **normal flow**.

$$Q = \left(\frac{\kappa}{n}\right) R_H^{\frac{2}{3}} \sqrt{S_0}\, A_N$$

$$100 = \left(\frac{1.486}{.016}\right)\left(\frac{10y_N}{10 + y_N}\right)^{\frac{2}{3}} \sqrt{.001}\,(20y_N)$$

$$1.702 = \left(\frac{10y_N}{10 + y_N}\right)^{\frac{2}{3}} y_N$$

Solve by trial and error.

$$y_N = 1.452\ ft$$

For **critical flow**.

$$\frac{bQ^2}{g\,A_{cr}^3} = 1$$

http://ingesolucionarios.blogspot.com
(cont.)

$$\frac{(20)(100)^2}{(32.2)[(y_{cr})(20)]^3} = 1$$

$$y_{cr} = .919\ ft$$

$\therefore\ y_N > y_{cr}$ $\therefore$ mild slope

$$\text{For} \begin{cases} M_1 & y > 1.452\ ft \\ M_2 & .919 < y < 1.452 \\ M_3 & y < .919 \end{cases}$$



http://ingesolucionarios.blogspot.com Edu_Zegarr_ch

http://ingesolucionarios.blogspot.com

A rectangular channel has a width of 10 ft and a flow of 10 ft$^3$/s. The depth is 3 in. Assume that a hydraulic jump occurs. What will the elevation of the free surface be after the jump, and what is the loss in kinetic energy?

$$b = 10\ ft$$

$$y_1 = 3\ in.$$

$$q_T = 10\ cfs$$

We can sue Eq. (13.83).

$$y_2 = \frac{y_1 \pm \sqrt{y_1^2 + \dfrac{8q_T^2}{gb^2y}}}{2}$$

$$y_2 = \frac{-\left(\dfrac{1}{4}\right) \pm \sqrt{\dfrac{1}{16} + \dfrac{(8)(10^2)(4)}{(32.2)(100)}}}{2} = 4.67\ in.$$

$$\therefore\ V_1 = \frac{10}{(10)\left(\dfrac{1}{4}\right)} = 4\ ft/\text{sec}$$

$$V_2 = \frac{10}{(10)(.389)} = 2.57\ ft/\text{sec}$$

$$(KE)_1 = 8\ ft\text{-}lb/slug$$

$$(KE)_2 = \frac{2.57^2}{2} = 3.30\ ft\text{-}lb/slug$$

$$\therefore\ Loss = 4.70\ ft\text{-}lb/slug$$


http://ingesolucionarios.blogspot.com Edu_Zegarr_ch

13.95 http://ingesolucionarios.blogspot.com

Water flows in a rectangular, finished-concrete channel and goes over a dam. After the dam, the water goes into a stilling basin at which there is a hydraulic jump. The channel has a slope of 0.003 and the depth 50 m upstream of the dam is 4 m. What is the depth of flow just before reaching the dam? The volumetric flow $Q$ is 18 m³/s and the width of the channel is 6 m. Do the problem the simplest way without averaging.

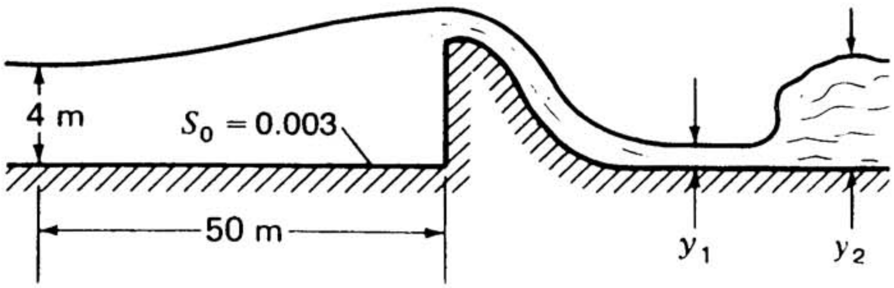


We go to Eq. (13.69).

$$\Delta L = \frac{1 - \dfrac{Q^2 b}{gA^3}}{S_0 - \left(\dfrac{n}{\kappa}\right)^2 \dfrac{Q^2}{R_H^{\frac{4}{3}} A^2}} \Delta y$$

$$50 = \frac{1 - \dfrac{(18^2)(6)}{(9.81)[(4)(6)]^3}}{.003 - \left(\dfrac{.012}{1}\right)^2 \dfrac{18^2}{[(4)(6)]^{10/3}/(14)^{4/3}}} \Delta y$$

$$\boxed{\Delta y = .1502 \ m}$$

http://ingesolucionarios.blogspot.com

Work Prob. 13.95 more accurate using linear averages. In the previous problem, we get $\Delta y = 0.1502$ m using only initial data.

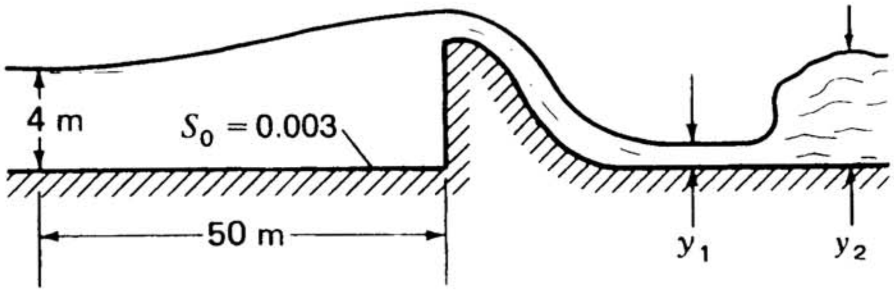


At the dam:

$$y = 4.150\ m$$

$$A = (6)(4.150) = 24.90\ m^2$$

$$P = 6 + (2)(4.150) = 14.30\ m$$

**First Iteration:** The average values for the interval $\Delta L = 50\ m$ are:

$$A_{av} = \frac{(6)(4) + 24.90}{2} = 24.45\ m^2$$

$$P_{av} = \frac{14 + 14.30}{2} = 14.15\ m$$

$$50 = \frac{1 - \dfrac{(18^2)(6)}{(9.81)(24.45)^3}}{.003 - \left(\dfrac{.012}{1}\right)^2 \dfrac{18^2}{(24.45)^{\frac{10}{3}} / (14.15)^{\frac{4}{3}}}} (\Delta y)$$

$$\boxed{\Delta y_1 = .1502\ m}$$


http://ingesolucionarios.blogspot.com Edu_Zegarr_ch

http://ingesolucionarios.blogspot.com

13.97

**In Prob. 13.95 we computed the depth before the dam to be 4.1502 m. If we neglect friction over the dam, what is the depth $y_2$ at the hydraulic jump?**

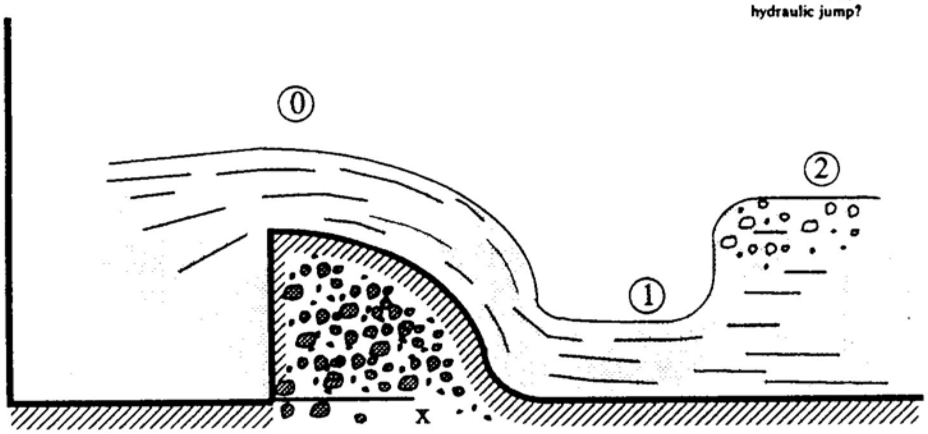


From Eq. (13.37) at section (0):

$$E_0 = y_0 + \frac{q^2}{2y^2 g} = 4.1502 + \frac{\left(\frac{18}{6}\right)^2}{(2)(4.1502)^2(9.81)} = 4.1768 \ m$$

If we neglect friction over the dam and the friction in the stilling basin, we can say between section (0) and section (1):

$$E_0 = E_1$$

$$4.1768 = y_1 + \frac{q^2}{2gy_1^2}$$

Noting $q = 3 \ m^2/s$ we can solve by trial and error for $y_1$. Thus:

$$y_1 = .34604 \ m \sim .346 \ m$$

Now go to Eq. (13.87).

$$y_2 = \frac{-y_1 \pm \sqrt{y_1^2 + \frac{8Q^2}{gb^2}\left(\frac{1}{y_1}\right)}}{2} = -\frac{.342}{2} \pm \frac{1}{2}\left\{\left(.346^2 + \frac{(8)(18^2)}{(9.81)(6^2)}\right)\left(\frac{1}{.346}\right)\right\}^{\frac{1}{2}} = 2.1363 \ m$$

$$\boxed{y_2 = 2.1363 \ m}$$



http://ingesolucionarios.blogspot.com Edu_Zegarr_ch

http://ingesolucionarios.blogspot.com

13.98

Water is moving in a rectangular channel is known to have a Froude number of $\sqrt{10}$. The channel is 5 m in width. The depth of flow is 1 m. If the water undergoes a hydraulic jump, what is the Froude number after the jump and what percentage of the mechanical energy of the flow is dissipated from the jump?

$$\frac{V^2 b}{gA} = \left(\sqrt{10}\right)^2 = 10$$

$$\frac{V^2(5)}{(9.81)(1)(5)} = 10$$

$$V = 9.9045\ m/s$$

$$Q = (9.905)(5)(1) = 49.523\ m^3/s$$

From Eq. (13.87)

$$y_2 = \frac{-1 \pm \sqrt{1^2 + \left[(8)(49.523)^2/(9.81)(5^2)\right]\left(\frac{1}{1}\right)}}{2} = 4.00\ m$$

$$(Fr_2)^2 = \frac{\left(\frac{Q}{A}\right)^2 b}{gA} = \frac{Q^2 b}{gA^3} = \frac{(49.523)^2(5)}{(g)(20)^3} = .1563$$

$$\therefore\ (Fr)_2 = .3953$$

From Eq. (13.38) find $H_\ell$ .

$$H_\ell = \frac{y_2^3 - y_1^3 + y_1 y_2 (y_1 - y_2)}{4 y_1 y_2} = \frac{4^3 - 1^3 + (4)(1)(1-4)}{(4)(1)(4)} = 3.1875\ m$$

From Eq. (13.34) and (13.35):

$$E_{sp} = H_1 - h_0 \qquad E_{sp} = \frac{V^2}{2g} + y$$

$$\therefore\ H_1 = \frac{V^2}{2g} + y_1 = \frac{9.9045^2}{2g} + 1 = 6.00\ m$$

$$(\Delta H_D) = 3.1875\ m$$

$$\%\ Loss = \frac{3.1875}{6}(100) = 53.13\%$$

 http://ingesolucionarios.blogspot.com

Water in a rectangular channel is seen to go through a hydraulic jump where the depth jumps from 3 to 7 m. The width of the channel is 10 m. What is the volume flow $Q$? What are the final and initial Froude numbers?

From Eq. (13.87)

$$y_2 = \frac{-y_1 \pm \sqrt{y_1^2 + \left(\frac{8Q^2}{gb^2}\right)\left(\frac{1}{y_1}\right)}}{2}$$

$$7 = \frac{-3 \pm \sqrt{3^2 + \frac{8Q^2}{(9.81)(10)^2}\left(\frac{1}{3}\right)}}{2}$$

$$Q = 321 \ m^3/\text{sec}$$

$$(Fr)_1 = \sqrt{\frac{V^2 b}{gA}} = \sqrt{\frac{\left(\frac{321}{30}\right)^2 (10)}{(9.81)(30)}} = \sqrt{3.89} = 1.972$$

$$(Fr)_2 = \sqrt{\frac{\left(\frac{321}{70}\right)^2 (10)}{(9.81)(70)}} = \sqrt{.3062} = .553$$

http://ingesolucionarios.blogspot.com Edu_Zegarr_cl 

 http://ingesolucionarios.blogspot.com

**Water flows in a rectangular concrete channel and undergoes a hydraulic jump such that 60 percent of its mechanical energy is to be dissipated. If the volume flow $Q$ is 100 $m^3/s$ and the width of the channel is 5 m, what must the Froude number be just before the jump? Set up the proper equations but do not actually solve.**

The initial total head is:

$$H_1 = \frac{V^2}{2g} + y_1 = \frac{100^2}{(2g)(y_1^2)(5^2)} + y_1 = \frac{20.39}{y_1^2} + y_1 \qquad (1)$$

Now go to Eq. (13.98)

$$H_l = \frac{y_2^3 - y_1^3 + y_1 y_2 (y_1 - y_2)}{4 y_1 y_2}$$

$$.60 = \frac{\dfrac{y_2^3 - y_1^3 + y_1 y_2 (y_1 - y_2)}{4 y_1 y_2}}{\dfrac{20.39}{y_1^2} + y_1} \qquad (2)$$

Also

$$y_2 = \frac{-y_1 \pm \sqrt{y_1^2 + [(8)(100)^2/(9.81)]\left(\dfrac{1}{y_1}\right)}}{2} \qquad (3)$$

Solve simultaneously (2) and (3) for $y_1$ and $y_2$. Also

$$Fr = \sqrt{\frac{V^2 b}{gA}} = \left[\frac{\left[\dfrac{100}{(y_1)(5)}\right]^2 (5)}{(9.81)(y_1^5)}\right]^{\frac{1}{2}} = \frac{6.386}{\sqrt{y_1^3}}$$



http://ingesolucionarios.blogspot.com Edu_Zegarr_ch

http://ingesolucionarios.blogspot.com

Water is flowing from a spillway into a stilling basin as shown. The elevation $y_A$ ahead of the spillway is 10 m. The width of the rectangular channel is 8 m. If the stilling basin dissipates 60 percent of the mechanical energy, what is the volume flow $Q_T$? Set up simultaneous equations but do not solve.

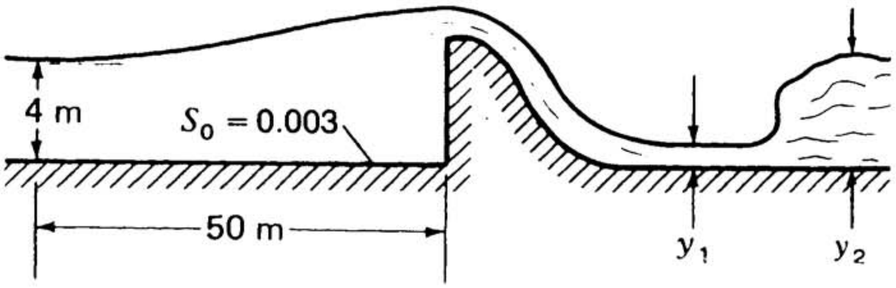


$$H_1 = \frac{V_A^2}{2g} + y_A = \frac{\dfrac{Q^2}{[(10)(8)]^2}}{2g} + 10$$

Hence $$H_\ell = (.60)\left[\frac{Q^2}{(80)^2(2g)} + 10\right]$$

Also neglecting friction before jump:

$$\frac{Q^2}{(80)^2(2g)} + 10 = \frac{Q^2}{[(y_1)(8)]^2(2g)} + y_1 \qquad (1)$$

From Eq. (13.98)

$$\frac{y_2^3 - y_1^3 + y_1 y_2 (y_1 - y_2)}{4 y_1 y_2} = H_\ell = .60\left[\frac{Q^2}{(80)^2 2g} + 10\right] \qquad (2)$$

Finally go to Eq. (13.87).

$$y_2 = \frac{-y_1 \pm \sqrt{y_1^2 + \left[\dfrac{(8)(Q^2)}{g(8)^2}\right]\left(\dfrac{1}{y_1}\right)}}{2} \qquad (3)$$

Unknowns $y_1$ , $y_2$ , $Q$ for which we have three simultaneous equations.


http://ingesolucionarios.blogspot.com Edu_Zegarr_ch

13.102 http://ingesolucionarios.blogspot.com

Water having a steady known volumetric flow $Q$ is moving in a rectangular channel at supercritical speed up an adverse slope. It undergoes a hydraulic jump as shown in Fig. P14.102. If we know $y_B$ and $y_A$ at positions $L_1 + L_2$ apart, how do we approximately locate the position of the hydraulic jump—i.e. how do we get $L_1$ and $L_2$? The channel has known value of $n$. Explain the simple method. The width is $b$.

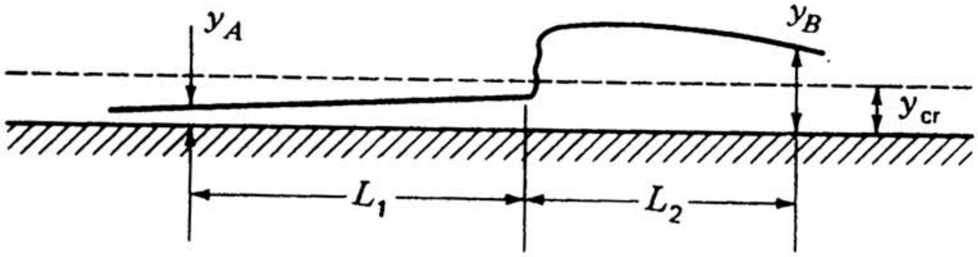


We go on to Eq. 14.69 and guess at a value $L_1$ and solve for $(\Delta y)_A$. Now compute $y_1 = y_A + (\Delta y)_A$ before the jump. Again, go to Eq. (14.69) and take the $L_2$ and again solve for $(\Delta y)_B$ in the flow upstream of the jump. Compute $y_2$ just after the jump $y_2 = y_B - (\Delta y)_B$. Now insert $y_1$ and $y_2$ into Eq. (14.87) to see whether this equation is satisfied for the given volumetric flow $Q$. If not, go back to choose a different value of $L_1$ proceeding in this way till the jump equation (14.87) is satisfied.



http://ingesolucionarios.blogspot.com Edu_Zegarr_ch